Experimental investigations of "on-demand" vortex generators

By Seyed G. Saddoughi

1. Motivation and background

Conventional vortex generators as found on many civil aircrafts are mainly for off-design conditions - e.g. suppression of separation or loss of aileron power when the Mach number accidentally rises above the design (cruise) value. In normal conditions they perform no useful function and exert a significant drag penalty. Recently there have been advances in new designs for passive vortex generators and boundary layer control. While traditionally the generators heights were of the order of the boundary layer thickness (δ), recent advances have been made where generators of the order of $\delta/4$ have been shown to be effective: see Gad-el-Hak & Bushnell (1991) for a review.

The advancement of Micro-Electro-Mechanical (MEM) devices has prompted several efforts in exploring the possibility of using such devices in turbulence control. These new devices offer the possibility of boundary layer manipulation through the production of vortices, momentum jets, or other features in the flow. However, the energy output of each device is low in general, but they can be used in large numbers. Therefore, the possibility of moving from passive vortex generators to active (on-demand) devices becomes of interest. Replacement of fixed rectangular or delta-wing generators by devices that could be activated when needed would produce substantial economies.

One example of an "on-demand" device is the vortex-generator jet originally proposed by Compton & Johnston (1992), in which an oblique jet is emitted from a nozzle flush with the surface. This is a simple device; however, it is likely to be economic only on or near engine nacelles where high-pressure air is available. Ducting to other parts of an aircraft is likely to involve so much extra weight and cost that there would be no net economic benefit.

An alternative form of "on-demand" vortex generator, requiring only an electrical power supply, has been developed by Jacobson & Reynolds (1993) at Stanford University. It consists of a surface cavity elongated in the stream direction (Fig. 1) and covered with a lid cantilevered at the upstream end. This kind of a vortex generator is also called a "springboard" actuator. The lid, which is a metal sheet with a sheet of piezoelectric ceramic bonded to it, lies flush with the boundary. On application of a voltage of the order of 10-100V, the ceramic expands or contracts; although the longitudinal strain is small, the induced bending strain is orders of magnitude larger. Even so, adequate amplitude can be obtained only by running at the cantilever resonance frequency and applying amplitude modulation: for 2.5 mm $\times$ 20 mm cantilevered lids, they obtained tip displacements of the order of 100

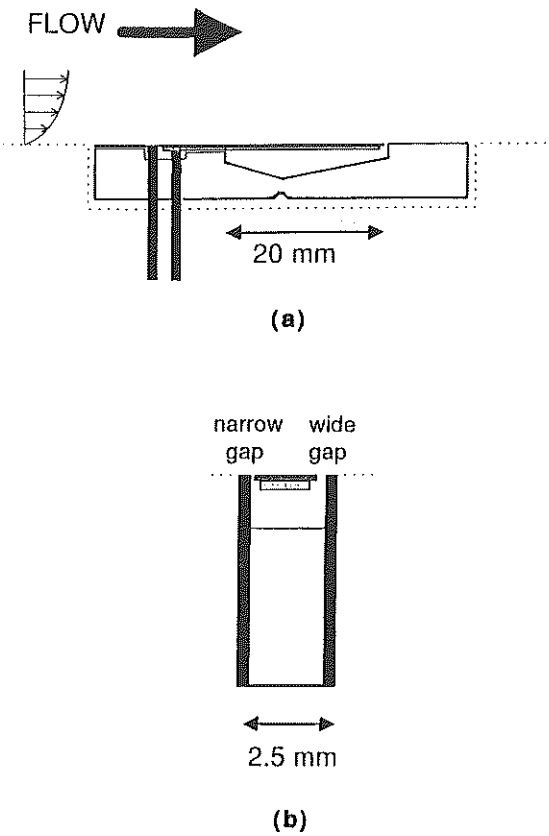

FIGURE 1. A schematic diagram of springboard piezo-ceramic actuator developed by Jacobson & Reynolds (1993). (a) Side view; (b) Front view.

to 150 μm. As the lid oscillates, fluid is expelled from the cavity through the gap around the lid on the downstroke.

The breakthrough innovation of the device was achieved using an asymmetrical gap configuration as shown in Fig. 1 (narrow gap $\approx$ 50 to 75 μm and wide gap $\approx$ 250 μm). Their actuator was driven with a 25 V amplitude sine wave at a frequency of approximately 325 Hz in water. Jacobson & Reynolds found that periodic emerging jets on the narrow side induced periodic longitudinal vorticity into the boundary layer. With a vertical cavity wall a vortex pair with common flow upwards is formed (Fig. 2). The cavity-lid combination developed by them has the potential to be made using micro-fabrication techniques, which are ideally suited to mass production. Their device was used to modify the inner layer of the boundary layer for skin-friction reduction and is now being incorporated into an active-control feedback system.

Our proposed application is not strictly "active" control: the vortex generators would simply be switched on, all together, when needed (e.g. when the aircraft Mach

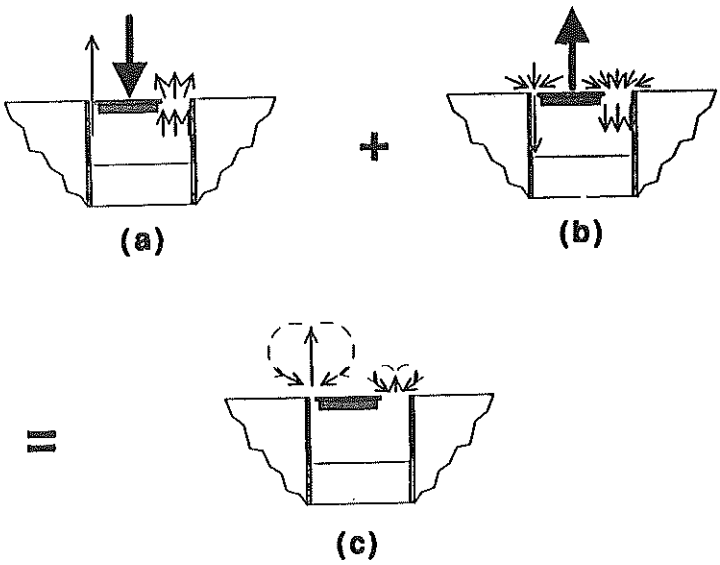

FIGURE 2. Induced actuator flow from Jacobson & Reynolds (1993). (a) Directed efflux; (b) Diffuse influx; (c) Superposition of (a) and (b).

number exceeded a certain limit). To this extent our scheme is simpler; however, to promote mixing and suppress separation we desire to deposit longitudinal vortices into the outer layer of the boundary layer as in conventional vortex generators. This requires a larger device although an alternative might be an array of smaller devices, for example, a longitudinal row with phase differences in the modulation signals so that the periodic vortices join up. The vortex pair with common flow up has the advantage that it will naturally drift away from the surface, but the disadvantage is that the net vorticity is zero so that the pair is eventually obliterated by turbulent mixing, rather than simply being diffused as in the case of a single vortex. It should be possible to devise alternative shapes of cavity wall so that the jet emerges obliquely and produces net longitudinal vorticity.

2. Accomplishments

2.1. Apparatus and measurement techniques

We have built a device with a mechanically driven cantilevered lid to avoid the restrictions of resonant forcing. Our device is made about ten times the size of Jacobson & Reynolds' device because intuition suggested that the optimum ratio of device size to boundary-layer thickness for our purpose would need to be larger than in the different task of control of inner-layer turbulence.

Our vortex generator is made so that shape or size of the cavity and lid (28 mm × 250 mm) can be easily changed: for example the side walls of the cavity are the ends of inserts which can be moved in the spanwise direction to alter the gap-width on one or both sides. The cavity depth (20 mm) can be changed by placing inserts inside the cavity. The lid frequency can be changed easily by means of a variable speed DC motor; presently we can obtain a maximum frequency of about 60 Hz for the cantilever-tip displacement of approximately 10 mm.

As mentioned above, cavity wall inclination may have a large effect on the ejected vortex pair. Hence our vortex generator is mounted on a turntable so that its yaw angle can be changed; if the emerging jet sheet is regarded crudely as a solid blockage of the boundary-layer flow, the jet emerging from a yawed cavity might be a more effective vortex generator than an unyawed jet. Finally, tests over a range of ratios of vortex-generator size to boundary layer thickness can be carried out simply by changing the streamwise location of the device.

Our vortex generator was mounted on the top wall of the 76 cm × 76 cm suction wind tunnel in the Mechanical Engineering Department at Stanford University. This wind tunnel is mainly used for flow-visualization purposes. The existing test section is about 3 m long so that fairly thick turbulent boundary layers can be obtained at downstream locations in this tunnel.

We conducted extensive flow-visualization experiments at two different free-stream velocities of $U_e \approx 1$ m/s and 5 m/s. Here we use a Cartesian coordinate system $x_i = (x, y, z)$ with x-axis along the flow direction, y-axis normal to the solid surface (top wall of the tunnel) and z-axis in the spanwise direction. The respective mean-velocity components in these directions are $U_i = (U, V, W)$.

Smoke was sucked into the flow by the boundary-layer fluid, through a slot located upstream of the vortex generator. A laser-light sheet was used to visualize the motion in cross-stream (y-z) planes. To document our results, we have taken photographs and films of the flow patterns around the vortex generator set at different orientations to the flow direction; the oscillating tip of the cantilevered lid was pointed in the (i) downstream, (ii) 45° to the downstream, (iii) upstream, and (iv) 45° to the upstream directions. Also, tests were conducted for different gap-width sizes and lid-oscillation frequencies at the above two free-stream velocities. Some of these flow-visualization results are presented and discussed below.

2.2. Results and discussion

For the first time, we are able to see the vortices that the "on-demand" vortex generator deposits into the boundary layer. As mentioned above we have taken a large number of photographs, three of which are shown in Figs. 3, 4, and 5, where all the pictures show flow patterns in y-z planes (flow out of page). Also, in these pictures, the wide-gap and the narrow-gap are 1 mm and 0.2 mm respectively. The lid frequencies were approximately 20 Hz and 50 Hz for the experiments conducted at $U_e \approx 1$ m/s and 5 m/s respectively.

In Fig. 3 the vortex generator is pointed in the downstream direction, and the wide gap in this case is located on the left-hand side of the picture. This is the flow pattern obtained at $U_e \approx 1$ m/s. Fig. 4 shows the flow visualization for the same

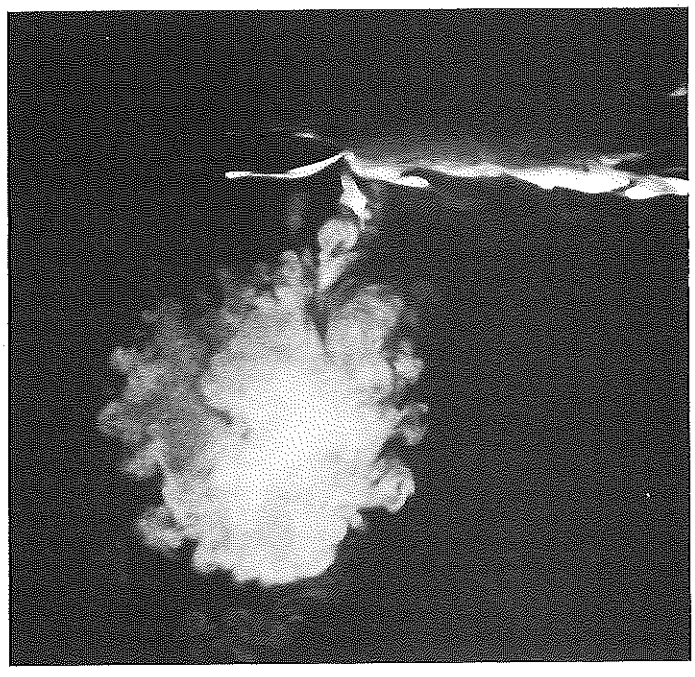

FIGURE 3. Jet sheet ejected from the wide gap at $U_e \approx 1$ m/s, when the vortex generator is pointed in the downstream direction.

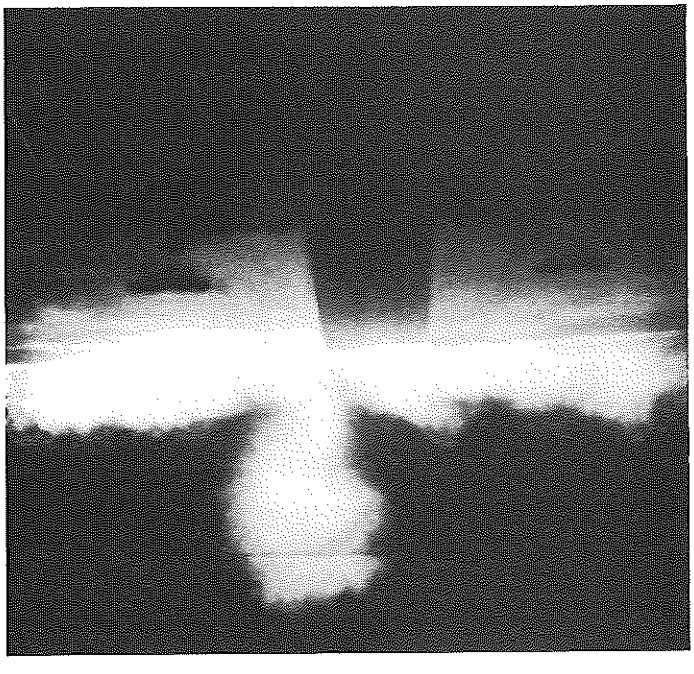

FIGURE 4. As Fig. 3 but at $U_e \approx 5$ m/s.

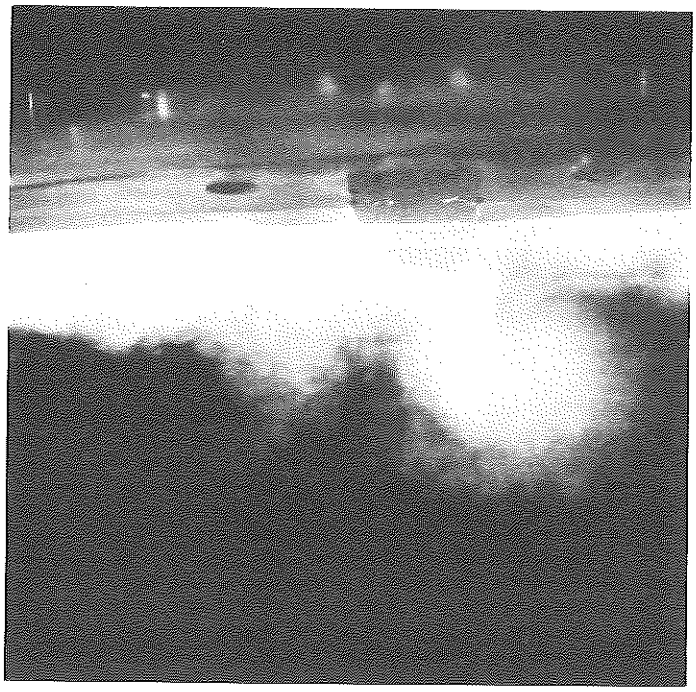

FIGURE 5. Vortical structure ejected from the wide gap at $U_e \approx 5$ m/s, when the vortex generator is pointed in the upstream direction.

orientation of the vortex generator, but at $U_e \approx 5$ m/s. It can be seen clearly that at both free-stream velocities, the jet sheets emerge from the wide gaps only, and for the high-speed case where the boundary layer thickness at the measurement location was about 20 mm, the jet sheet extends to approximately 3 to 4 times boundary-layer thicknesses into the flow.

Fig. 5 shows the flow pattern for $U_e \approx 5$ m/s, but in this case the vortex generator is pointed in the upstream direction; therefore, the wide gap is now located on the right-hand side of the picture. Here also we see large ejections from the wide gap only; however, in this case we can observe a better vortical structure than the one shown in Fig. 4. This suggests that a more efficient vortex generation may be achieved in this way. Our visualizations show that these vortical structures last for large distances downstream of the vortex generator.

In all of our experiments we observed that the stronger jet emerged from the wide-gap side rather than the narrow side. This is contrary to the finding of Jacobson & Reynolds. In order to explain this difference one may consider the Stokes' parameter, $St \equiv \sqrt{\frac{2\pi f d^2}{\nu}}$, (Rathnasingham, *et al.* 1994), where f is the frequency, d is the diameter of the circular hole for the "wall-jet" actuators, and ν is the kinematic viscosity. Based on dimensional analysis, Rathnasingham,*et al.* proposed that for this kind of actuator, $St > 1$ is required to prevent the blockage of the exit flow due to viscous effects.

In the case of the springboard actuators, one may assume d to represent the gap-width size. In our investigations, for the narrow gap at the highest lid-frequency of 50 Hz, $St < 1$. Therefore, it appears that for our narrow gap the exit flow is viscous dominated. This may be the reason that we do not see any flow out of the narrow gap. However, for the narrow gap of Jacobson & Reynolds' case, $St > 1$, since their experiments were conducted in water, and also in their case the lid frequency was larger than the present studies.

3. Future plans

In order to quantify our conclusions from the flow visualization experiments, we plan to conduct the following measurements:

(i) To check the efficiency of our device, we need to take spanwise measurements of skin friction at a few streamwise locations downstream of the vortex generator.

(ii) To obtain a measure of the mean longitudinal vorticity, $\left(\frac{\partial W}{\partial y} - \frac{\partial V}{\partial z}\right)$, we will take X-wire measurements in x-y and x-z modes (at close enough spacing to obtain accurate derivatives) in a few cross-sectional locations downstream of the vortex generator.

(iii) If the above initial tests show strong vortex-generation effects, we will use our vortex generators in laboratory adverse-pressure-gradient boundary layers to suppress separation, and eventually we would test them on a full-scale aircraft in the 80' × 120' wind tunnel at NASA Ames.

Acknowledgments

This work was carried out in collaborations with Dr. Nagi Mansour and Professors Peter Bradshaw and Bill Reynolds. We would like to thank Mr. Fritz Rinehart for his suggestions during the manufacturing of the vortex generator. We would also like to thank Don Bott, Carl Buice, and Pat Moriarty for their help during the experiments.

REFERENCES

COMPTON, D. A. & JOHNSTON, J. P. 1992 Streamwise vortex production by pitched and skewed jets in turbulent boundary layer. *AIAA J.* **30,** 640.

GAD-EL-HAK, M. & BUSHNELL, D. M. 1991 Separation control: Review. *J. Fluids Eng.* **113,** 5.

JACOBSON, S. A. & REYNOLDS, W. C. 1993 Active boundary layer control using flush-mounted surface actuators. *Bulletin of the American Physical Society*, Vol. 38, No. 12, P. 2197.

RATHNASINGHAM, R., PIEPSZ, O., GOLDBERG, H. D., SCHMIDT, M. A. & BREUER, K. S. 1994 Performance of sensors and actuators for turbulent flow control. *Bulletin of the American Physical Society*, Vol. 39, No. 9, P. 1909.