Transverse vorticity measurements in the NASA Ames 80×120 wind tunnel boundary layer

By J. F. Foss[1], D. G. Bohl[1], F. D. Bramkamp[2], AND J. G. Klewicki[3]

1. Motivation and objectives

The MSU compact four-wire transverse vorticity probe, see Fig. 1, permits $\omega_z(t)$ measurements in a nominally 1mm^2 domain. Note that a conventional coordinate system is used with x and y in the streamwise and normal directions respectively. The algorithms to extract $\omega(t)$ from the four simultaneously sampled voltages and the relevant uncertainty considerations are reported by Foss and Haw (1990). Typical results, from earlier studies can be found in Haw, *et al.* (1989), Bruns, *et al.* (1991) and Foss (1994).

The purpose of this investigation was to acquire time series data – in the same access port at the ceiling of the 80 ft×120 ft wind tunnel (NASA Ames Research Center) as earlier used by the Wallace group from the University of Maryland – and to compare the present results with those of the three-component vorticity probe used in that earlier study. See Wallace, *et al.* (1992) and Wallace and Ong (1995) for this earlier investigation. Note that both these earlier and the present off-centerline results can also be compared with the centerline (at the same streamwise location) measurements reported by Saddoughi and Veeravalli (1994).

The technical objectives of the latter investigation, which were definitively achieved, were to examine the degrees to which local isotropy conditions describe the large turbulent Reynolds number ($R_\lambda = \overline{u}\lambda/\nu = 500$ and 600 at $y = 100$ and 515 mm from the wall respectively) conditions of this turbulent boundary layer. Their investigation provides an excellent framework for the evaluation of the data sets from the two complementary (and much briefer) studies.

The University of Maryland probe has a sample domain of approximately 1.5 mm diameter in the plane normal to the stream and a length characterized by the convected frame derivative evaluation (approximately 1 mm). Given these dimensions and given the approximately 1 mm^2 dimension for the MSU probe, it is advantageous to make measurements in as large a flow as possible. Hence the nominal boundary layer thickness of 1 m (at the NASA Ames tunnel) presented a most attractive measurement environment for these two research groups. Both sets of measurements were executed at $U_\infty = 10$ m/s.

From Saddoughi and Veeravalli (1994) the Kolmogorov microscales at 100 and 515 mm from the wall can be estimated for $U_\infty = 10$ m/s; viz., $\eta_k = 0.18$ mm ($y = 100$ mm) $= 0.32$ mm ($y = 515$ mm).

1 Michigan State University
2 RWTH, Achen, Michigan State University
3 University of Utah

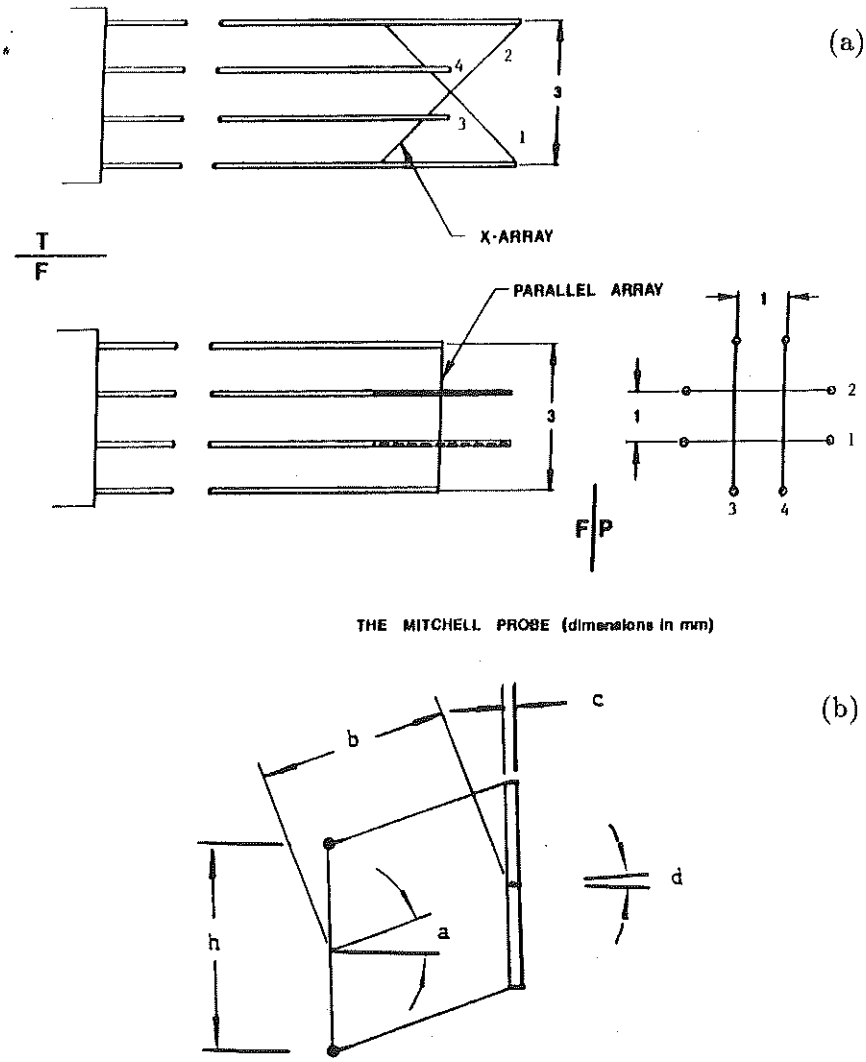

FIGURE 1. The MSU compact vorticity probe. a). Probe geometry; b) A schematic representation of the micro circulation domain. h = separation between parallel probes; a = average pitch angle associated with the time steps to roduce the convected length (b); d, c = angle and length (as above) for the next time step in the time series.

The latter permits the probe scale of 1 mm to satisfy the Wyngaard (1963) criterion of $h/\eta \simeq 3$ to fully resolve the vorticity.

2. Accomplishments

The data processing for these experiments is in progress. Sufficient results are in hand to ensure a body of viable data (i.e., the pre- and post-calibrations show quite satisfactory agreement); however, no flow field results will be included in this

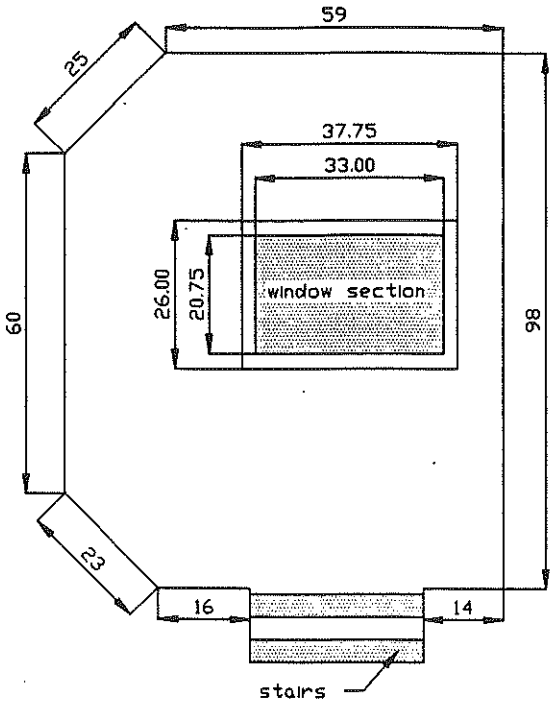

FIGURE 2. Work area-access port at the ceiling of the 80 ft×120 ft NASA Ames Wind Tunnel. All dimensions in inches.

report. It is anticipated that a full reporting of the velocity and transverse vorticity values will be available for the 1995 CTR Annual Research Briefs.

2.1 The experimental apparatus

The present co-author, F. Bramkamp, prepared his second Studienarbeit (see Bramkamp (1994)) on the basis of the design, implementation, and initial results evaluation for this project. The traverse system designed by him will be briefly noted herein.

There is a twofold significance of our reporting on this traverse device: i) the components are in storage at MSU; their loan can be arranged should they be useful to a subsequent investigator, and ii) the Bramkamp design is known to meet the strict safety requirements of the NASA test engineers and these specifications are detailed in his thesis.

Fig. 2 presents the work area for the access port at approximately 50 m from the end of the contraction; this site is at the 1/4 width location to the left (looking streamwise) of the tunnel centerline. Fig. 3 shows the traverse system that was fabricated for these measurements. A "trap door", labeled 19a, b in Fig. 3, was opened to pass the probe holder assembly (17, 18) through the plane of the tunnel ceiling. The actual probe holder (18) was removed and the probe was attached to the portable traverse rig to accomplish the pitch-angle flow-speed calibration map (see Section 2.2).

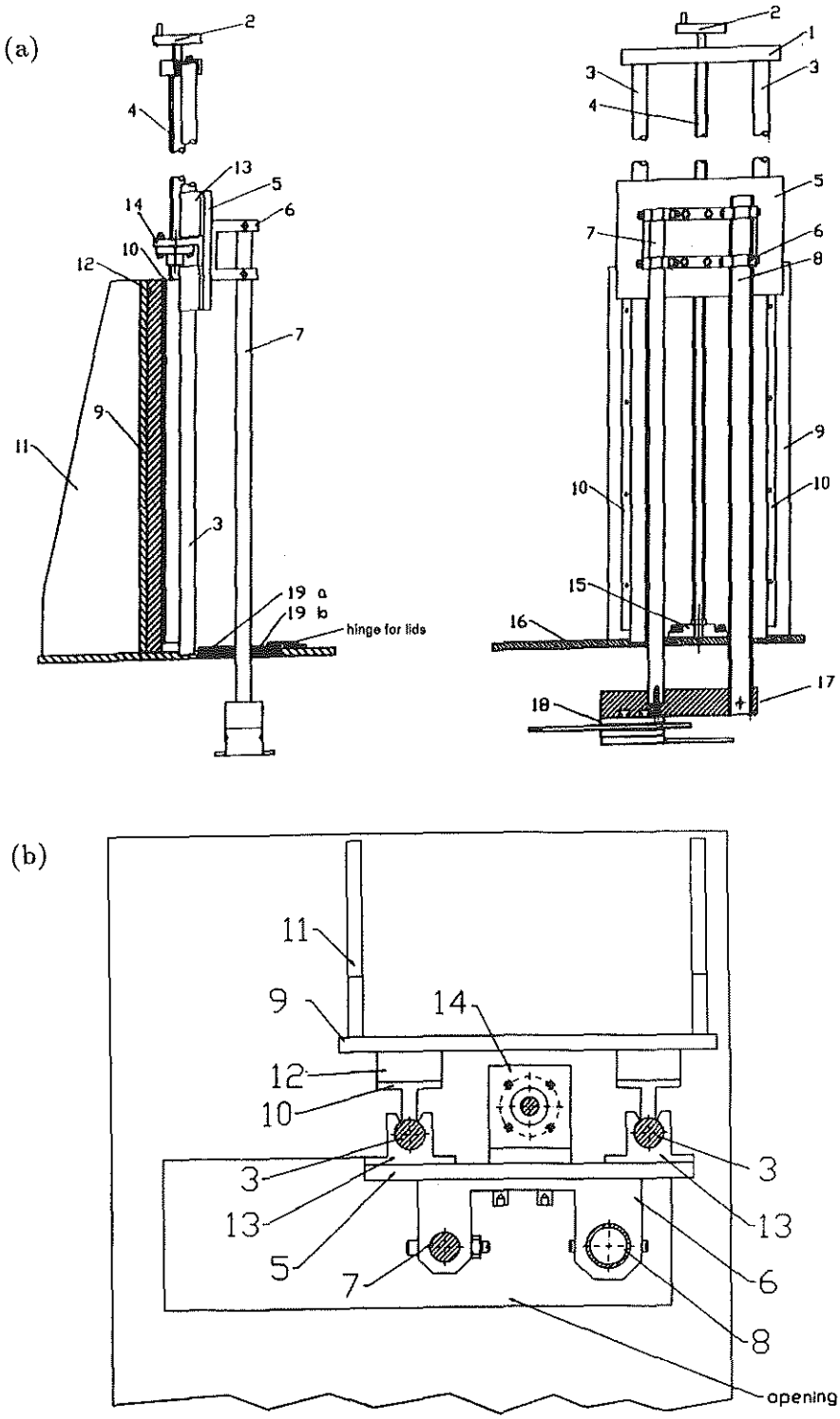

FIGURE 3. Traverse system. a) Elevation views; b) Top view.

Data time series from $y \approx 100$ mm to nearly the full extent (1.3 m) of the traverse system were acquired with this device. The top view (Fig. 3b), shows the open tube (8) that was used for the probe (hot-wire and thermistor) cables.

A portable calibration tunnel, with provision for orienting the probe at $\pm 36°$ in pitch and providing a 2 to 12 m/s flow-speed range, was used before and after each approximately two-hour data session.

2.2 Calibration data

The pre- and post-calibration data sets have been subjected to comparative analysis by: i) fitting the form

$$E^2(Q,\gamma) = A(\gamma) + B(\gamma)Q^{n(\gamma)} \tag{1}$$

to each pitch angle (γ), and ii) comparing the separate calibrations to the A, B, n values of the combined calibration data set.

The first evaluation (i) is to ensure (by a sufficiently small standard deviation between measured and computed velocities) that the individual calibrations have integrity. The second evaluation (ii) is to ensure that any drift in the voltage-velocity transfer function for each wire was sufficiently small during the time period required for the measurements.

The single wire probe data at y =100, 112.6, 87.4 mm and y =515, 549, 481 mm were used to evaluate ϵ and η from the integral of $k^2, E(k)$. Specifically, the averaged coefficients in (1) agreed with the respective calibrations to within $\pm$ 0.3%.

The parallel array and one of the slant wires of the transverse vorticity probe showed quite satisfactory agreement using these criteria for the above y locations plus a second data session that provided data at y =100, 300, 515, and 900 mm from the wall.

If the pitch angles of the flow exhibit a sufficiently small range approximately $\pm 15°$, then the single slant wire can adequately resolve the magnitude and direction of the velocity for the "three-wire" probe. Fortunately, preliminary data processing suggests that this situation is obtained.

2.3 Flow field data

Twelve time series data sets (E_1, E_2, E_3, E_4) were acquired at a rate of 30 kHz and for a time period of 13 seconds at the $y = 100 \pm 0$, 12.6 m locations. Eight data sets (same conditions) were acquired at $y = 515, \pm 0$, 34 mm before the tunnel was "shut down". Note that the $\pm y$ positions are to provide an unambiguous value for the time mean vorticity; namely, $\overline{\omega}_z$.

The second acquisition session provided 85 data sets at each of the y locations (0.9 to 0.1 m) using a 30 kHz sample rate and a duration of 16.6 seconds per set.

3. Future plans

The flow field data will be processed using the viable calibration data. Direct comparisons with the results of Saddoughi and Veeravalli (1994) and with Wallace, *et al.* (1992) will then be made. The "activity intermittency", introduced by Haw,

et al. (1989) will be used to interrogate the outer region signals. Comparisons with the intermittency data from the large two-stream shear layer at the University of Houston (using the same probe) will be of particular interest. See Foss, *et al.* (1994) for a brief indication of the latter.

The vorticity-vorticity correlation functions will be of particular interest at the minimum y position in the boundary layer. These correlations, in the large R_θ condition of the one- and two-stream shear layers, show pronounced small- and large-scale effects. Specifically, the correlation function drops sharply for small displacements but retains significant values for unexpectedly large displacements. These free shear layer considerations have been identified by Foss, *et al.* (1993) and Foss (1994).

REFERENCES

BRAMKAMP, F. D. 1994 The Design, Testing and Utilization of Wind Tunnel Measurement Equipment and Calibration Software. A Studienarbeit for the Aerodynamics Institute, RWTH Aachen, Executed at Michigan State Univ.

BRUNS, J. M., HAW, R. C., & FOSS, J. F. 1991 The Velocity and Transverse Vorticity Fields in a Single Stream Shear Layer. Proc. Eighth Turbulent Shear Flows Conference, 3-1-1 to 3-1-6.

FOSS, J. F. 1994 Vorticity Considerations and Planar Shear Layers. *Experimental Thermal and Fluid Sciences.* **8**, 260-270.

FOSS, J. F., BOHL, D.G., & KLEIS, S. J. 1993 Vorticity-Vorticity Correlation Functions in a Two-Stream Mixing Layer. *Bull Am Phys Soc.* **38.**

FOSS, J. F., & HAW, R. C. 1990 Transverse Vorticity Measurements Using a Compact Array of Four Sensors. *The Heuristics of Thermal Anemometry.* **97**, 71-76.

HAW, R. C., FOSS, J. K., & FOSS, J. F. 1989 Vorticity Based Intermittency Measurements in a Single Stream Shear Layer. Proc. Second European Turb. Conf. Advances in Turbulence 2.

SADDOUGHI, S. G., & VEERAVALLI, S. V. 1994 Local Isotropy in Turbulent Boundary Layers at High Reynolds Number. *J. Fluid Mech.* **268**, 333-372.

WALLLACE, J., & ONG, L. (In press) Local isotropy of the vorticity field in a boundary layer at high Reynolds number. Proc. of the 5th European Turbulence Conf.

WALLACE, J., ONG, L., & BALINT, J.-L. 1992 An Investigation of small scale of turbulence in a boundary layer at high Reynolds number. *Annual Research Briefs 1992.* NASA Ames/Stanford University, 263-268.

WYNGAARD, J. C. 1969 Spatial Resolution of the Vorticity Meter and Other Hot-Wire Arrays. *J. Sci. Instr. (J. Phys. E.),* **2**,983-87.