Recent Progress on Aviation Integrity

for the Institute of Navigation
on September 17, 2008

by Per Enge, Stanford University

Acknowledgement: This work was sponsored by the FAA Satellite Navigation Office under CRDA 08-G-007.

Disclaimer: The opinions may be mine alone, and the mistakes certainly are.

Outline

- Integrity & continuity
- Space based augmentation systems
- Ground based augmentation systems
- Impact of new constellations & frequencies

Exceptions Drive Aviation Architectures (GPS as Seen by a Aerospace Engineer)

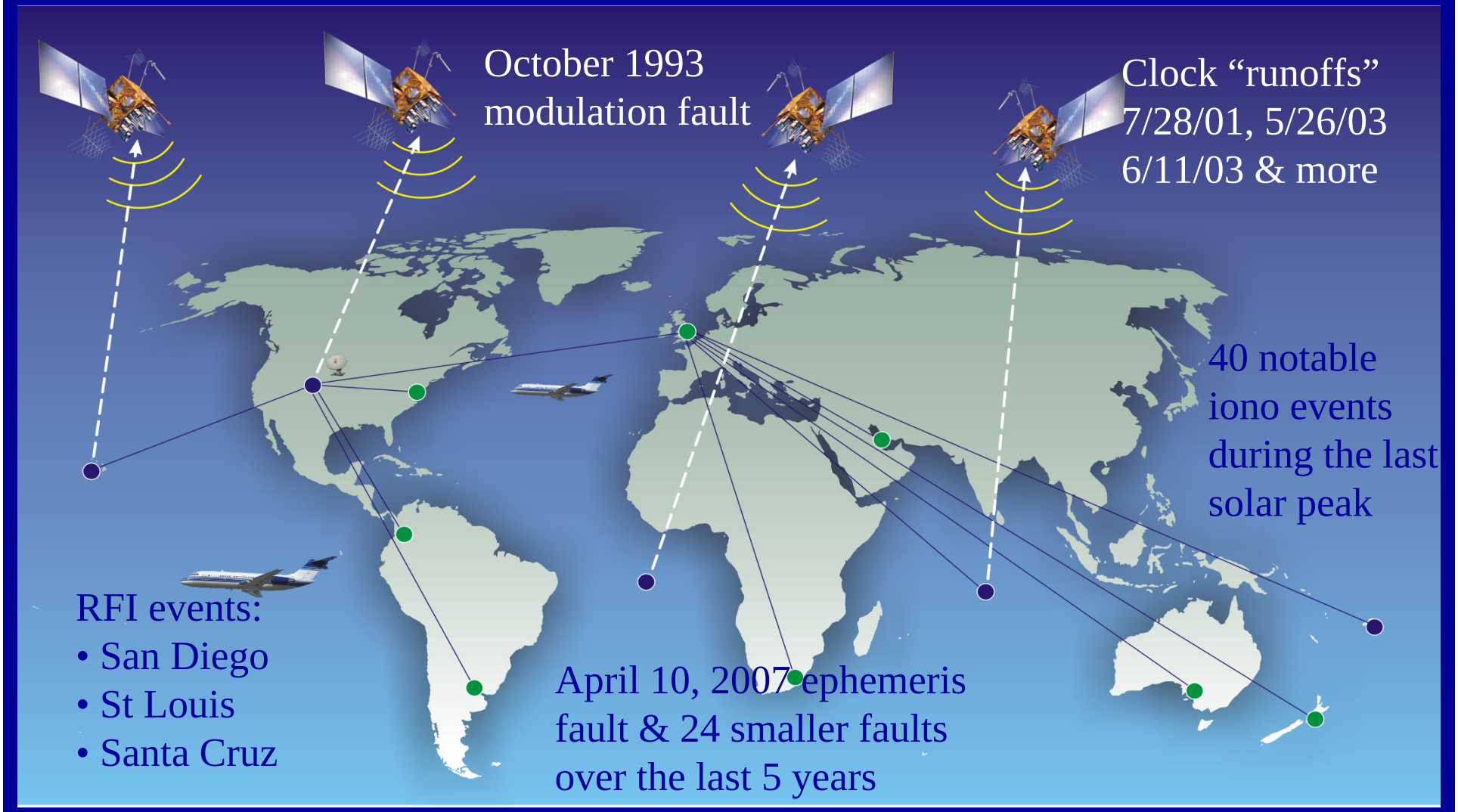

Performance of an Integrity Augmentation

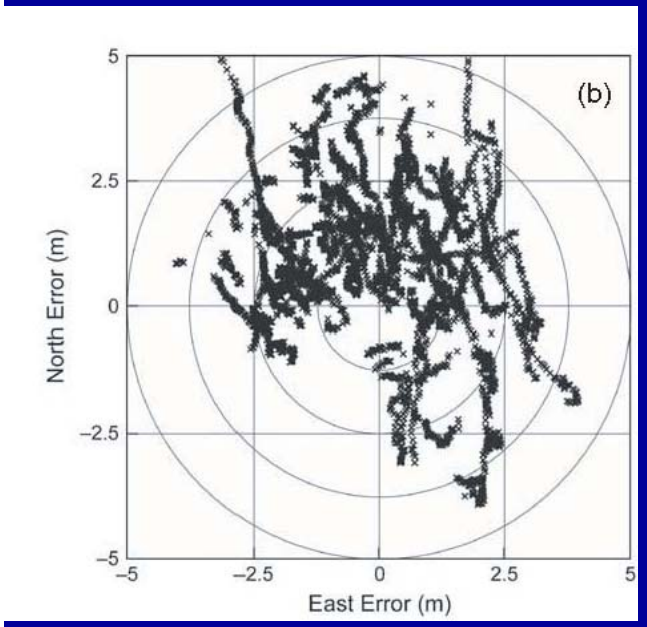

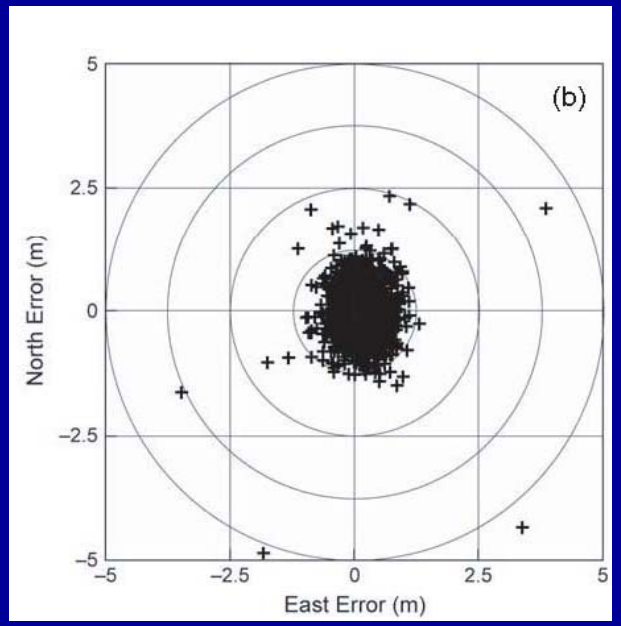

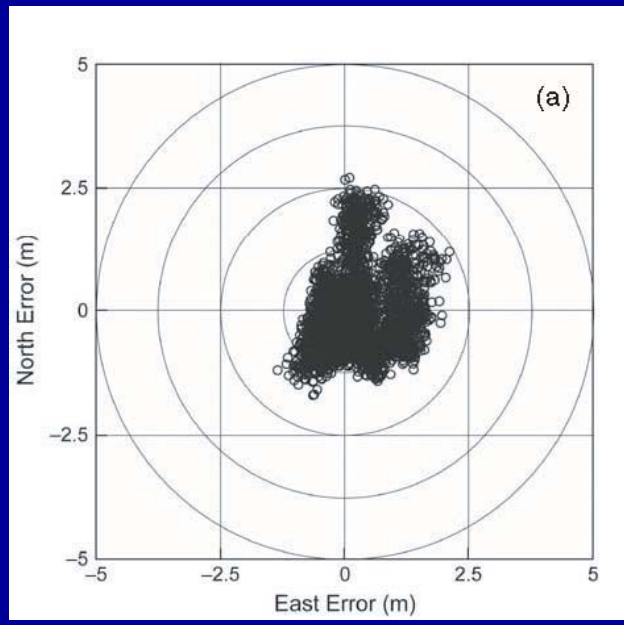

from WAAS

Space Based Augmentation Systems (SBAS)

- 33,000 equipped GA aircraft in the U.S.
- 700 equipped regional & business aircraft
- 1161 LPV procedures
- no integrity faults since commissioning in July 2003
- interoperability between SBASs

Ground Based Augmentation Systems (GBAS)

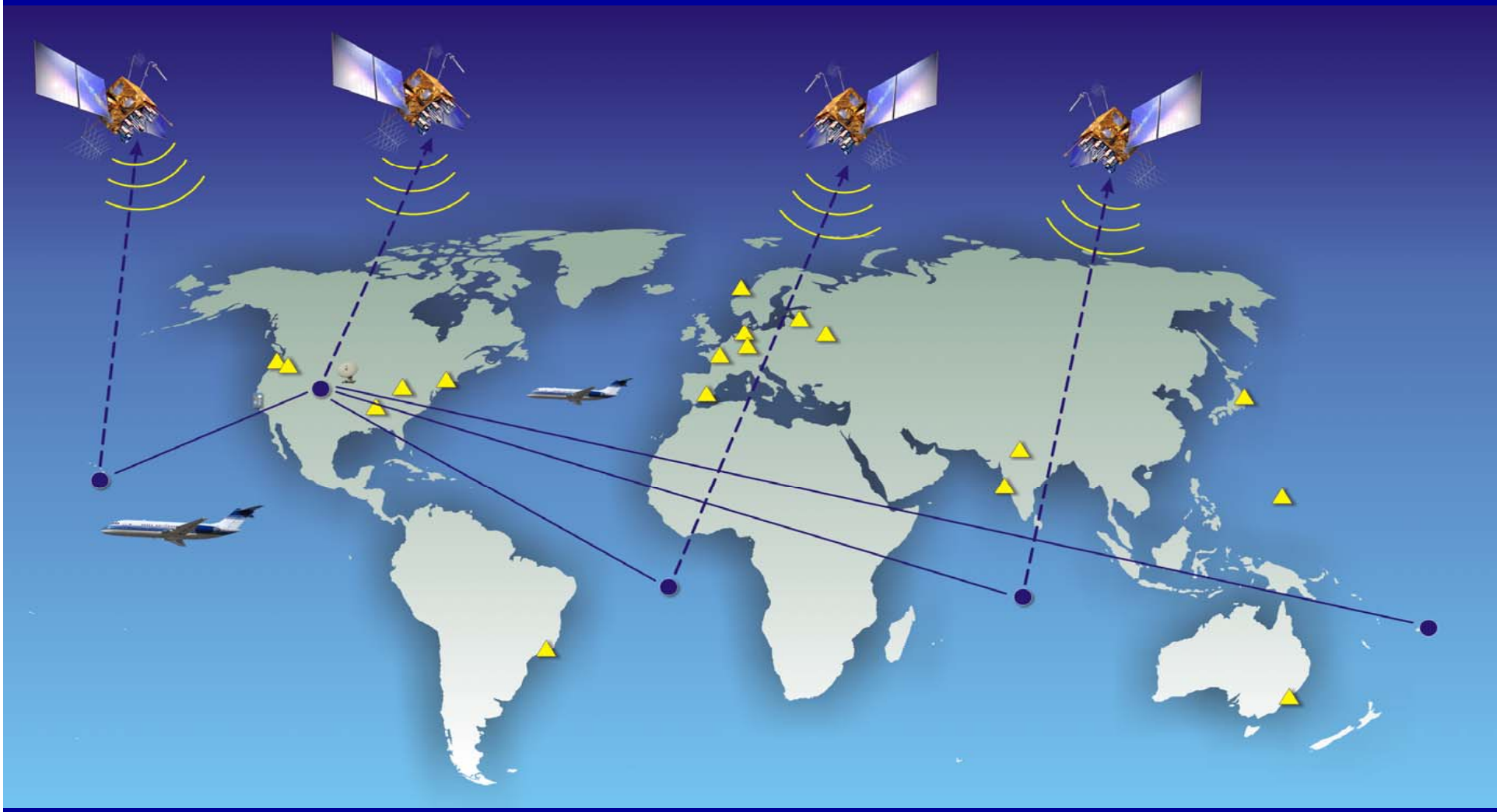

HMI Collaboration of FAA, Honeywell, Mitre, Zeta, Sequoia, Rannoch, OU, IIT & SU

1. Code carrier divergence
2. Signal deformation monitoring
3. Tropospheric anomalies
4. Nominal ionosphere
5. Anomalous ionosphere
6. Low-power
7. Ephemeris faults (Types B, A1 & A2)
8. Excessive acceleration
9. Radio frequency interference
10. Sigma monitoring

Signal Deformation Threat Analysis is Ten Dimensional

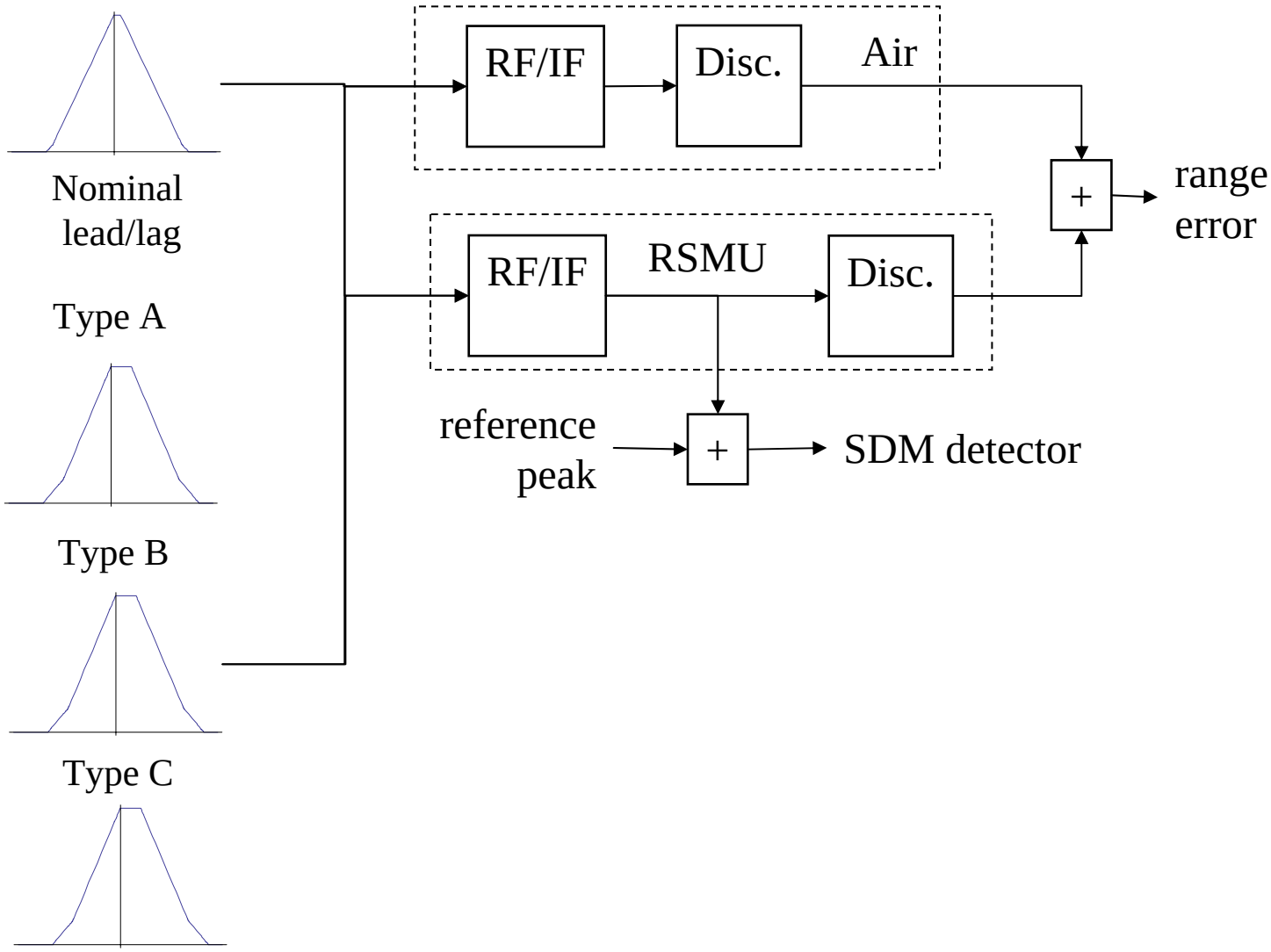

SDM Threat Embellished

- Nominal signal deformation must be treated.
- Fault analysis depends on ten parameters.
- Fault onset cases must also be considered.
  - SV failed when GBAS installed
  - Readmission after SDM detection
  - SV failed when launched
  - SV failed when set “unhealthy”

Ionospheric Analysis is also Ten Dimensional

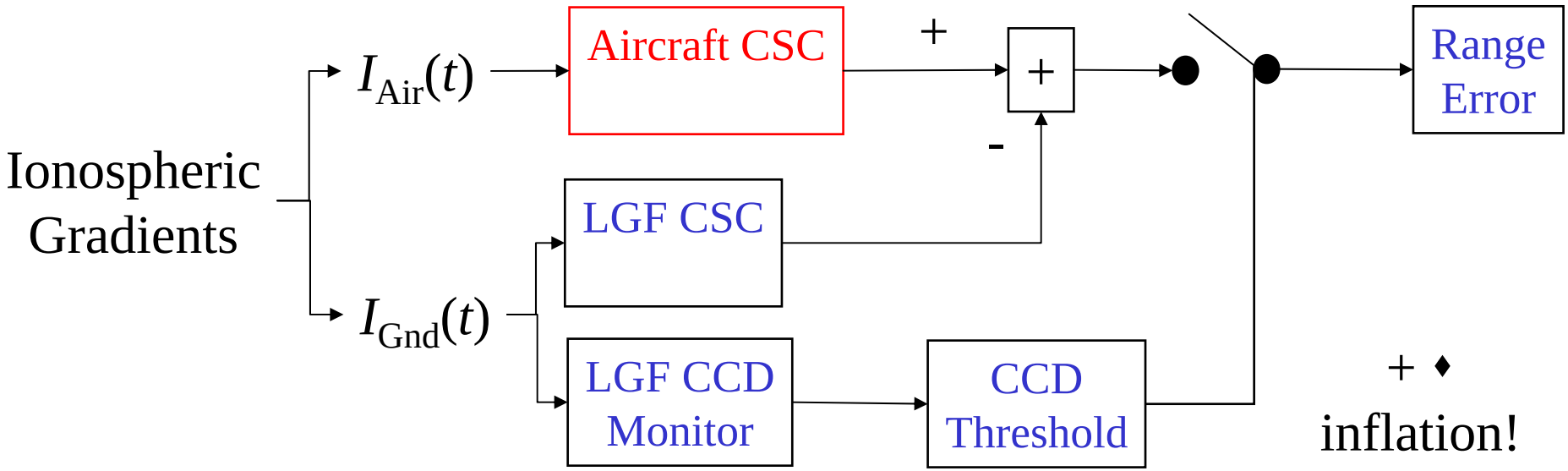

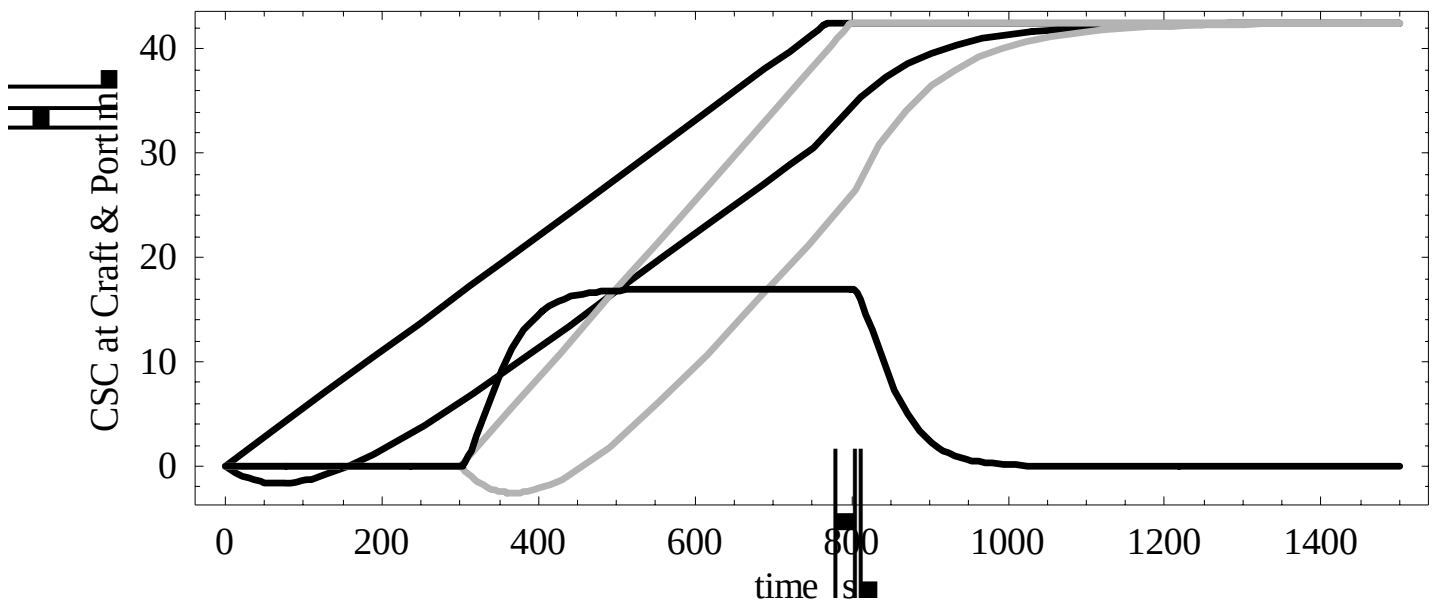

Frequency & Spatial Diversity
(from Günter Hein, FAF Munich)

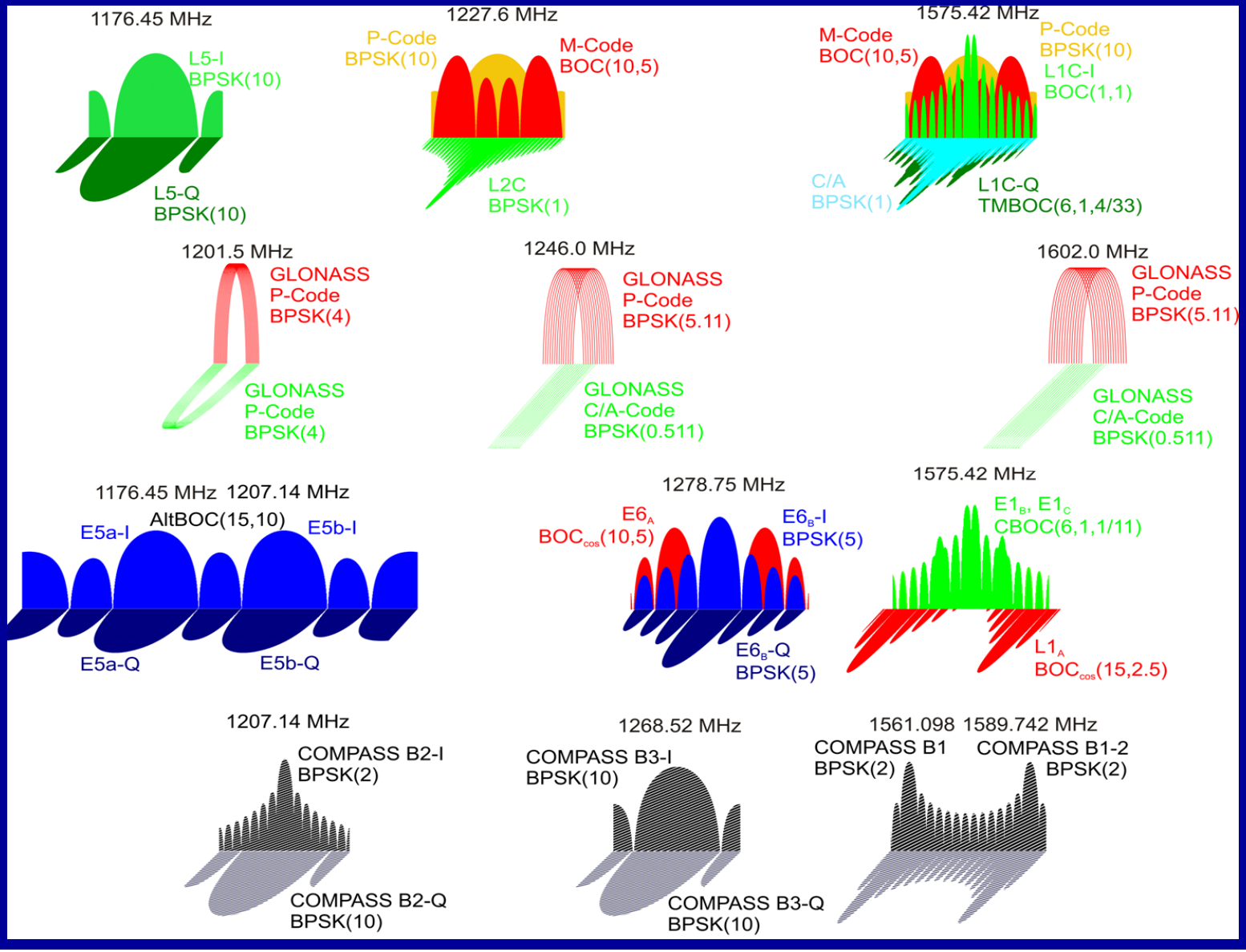

Aviation Benefits from Frequency & Spatial Diversity

- Worldwide approach capability with vertical guidance, but no airport equipment.
- Worldwide landing capability (Cat. II/III)
- Robust against
  - Ionosphere
  - Scheduled RFI
  - Unscheduled RFI

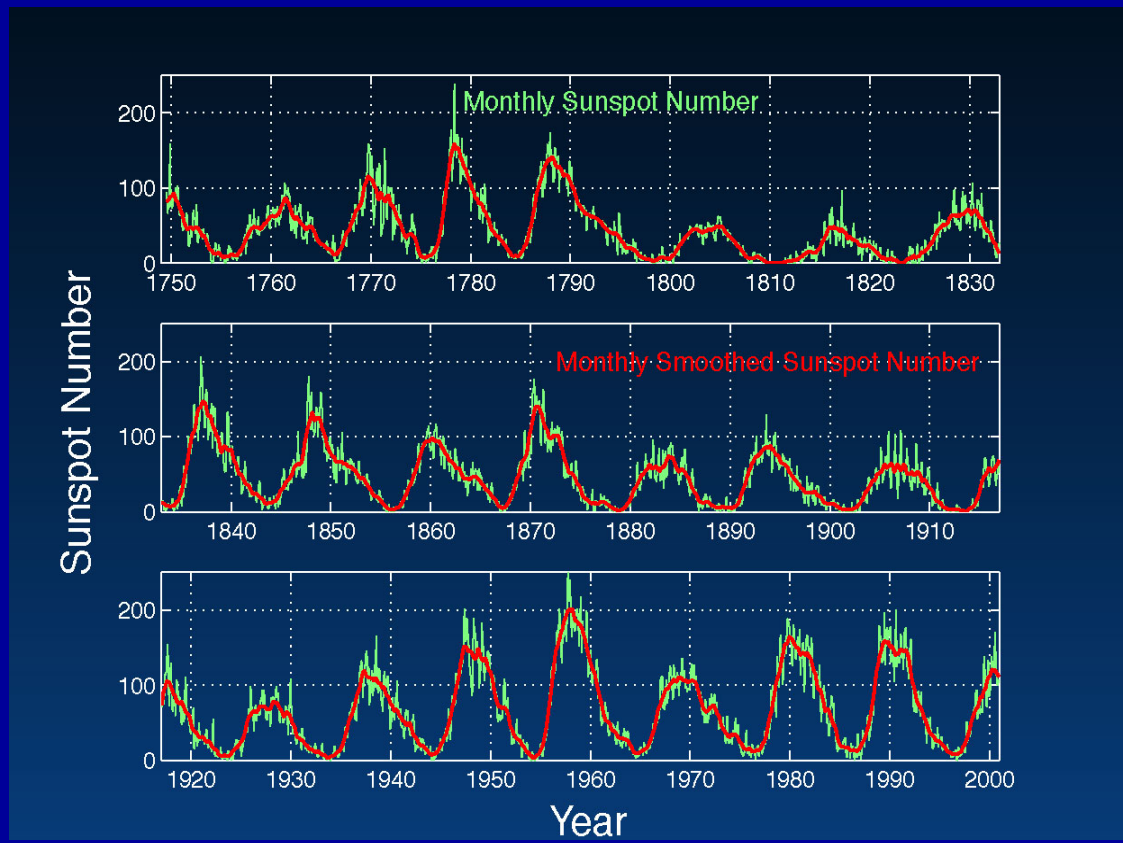

GEAS Panel

Deane Bunce (Co-Chair)	FAA ATO-W
Leo Eldredge	FAA ATO-W
Deborah Lawrence	FAA ATO-W
Calvin Miles	FAA ATO-W
Kevin Bridges	FAA AVS
Hamza Abduselam	FAA AVS
Tom McHugh	FAA ATO-P
Bill Wanner	FAA ATO-P
David Schoonenberg	NSSO
Mike David	NSSO
Karen Van Dyke	RITA/Volpe
Ed Sigler	GPS TAC
Joe Palermo	JPDO/BAH
Jiyun Lee	GPS TAC
Tim Murphy	Boeing CAG

Victor Lin	GWing/Aerospace
Karl Shallberg	GREI
Boris Pervan	IIT
John Dobyne	G-WIng/ARINC
Karl Kovach	G-Wing/Aerospace
Chris Hegarty	MITRE
Young Lee	MITRE
JP Fernow	MITRE
Frank Van Grass	Ohio University
Pat Reddan	Zeta
AJ van Dierendonck	AJ Systems
Juan Blanch	Stanford University
Todd Walter	Stanford University
Per Enge (Co-Chair)	Stanford University

Integrity Architectures for Vertical Approach Guidance

number of satellites

24 | 27 | 30

Compare measurements to ground truth

Avionics compare SV range rate residuals "Relative RAIM"

Avionics compare SV range residuals "Absolute RAIM"

seconds | minutes | hours

update time

Integrity Architectures for Vertical Approach Guidance

Each GNSS is independent

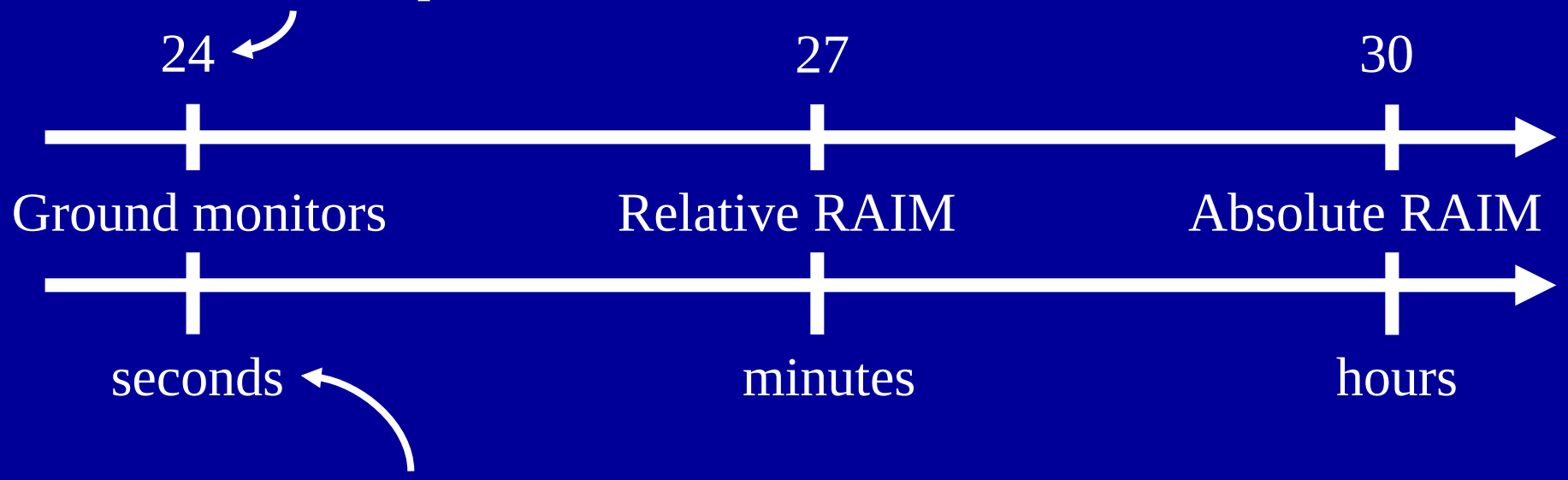

- Terrestrial radio (GBAS)
- Regional GEOs (SBAS)
- Global SBAS seems difficult
- Within a GNSS
  - could add SV-based monitors
  - update rate may be difficult
  - complicated

Integrity Architectures for Vertical Approach Guidance

Each GNSS is independent

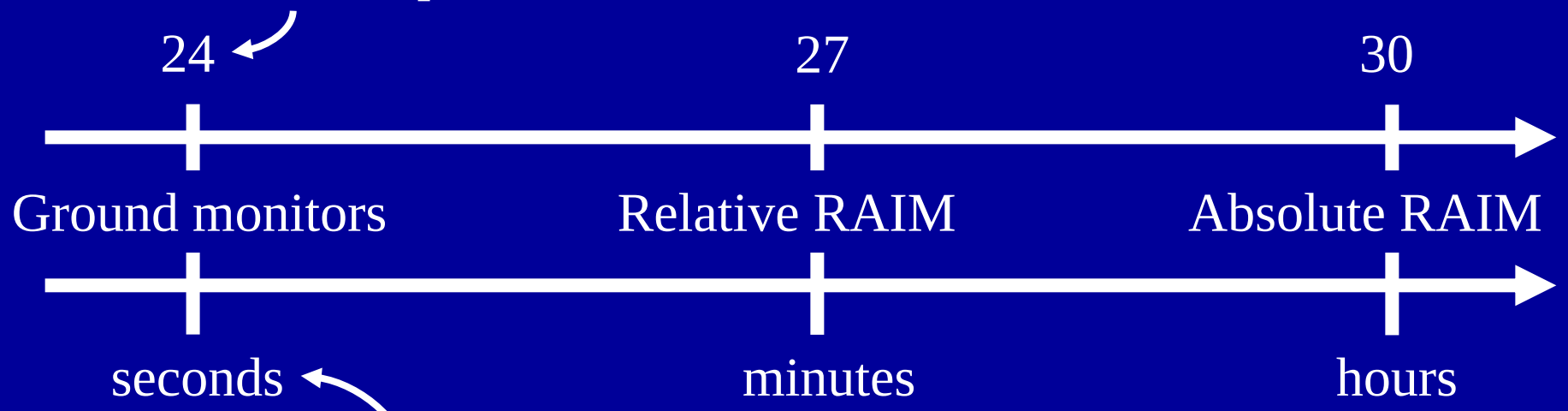

- Terrestrial radio (GBAS)
- Regional GEOs (SBAS)
- Global SBAS seems difficult
- Within a GNSS
  - could add SV-based monitors
  - update rate may be difficult
  - complicated

Integrity Architectures for Vertical Approach Guidance

- Big GNSS
- 30+6 for GPS !
- Rely on more than one GNSS

Each GNSS is independent

24	27	30
Ground monitors	Relative RAIM	Absolute RAIM
seconds	minutes	hours

Monitors & pipe still needed

Way Forward with Multiple Constellations & Frequencies

- Dual-frequency, multiple-constellation GBAS
  - VDB needed to support advanced operations
  - Capacity of VDB
- Dual-frequency SBAS
  - Semi-codeless sunset
  - Support L5 users
  - Smooth transition for an operational system
  - Coverage extensions (e.g. WAAS to South America)
- Longer term: Anticipate ARAIM
  - 30+6 for GPS
  - Strong multi-constellation protocol & policy

Way Forward with Multiple Constellations & Frequencies

- Galvanize MOPS activity
  - Coast through RFI outages
  - Backwards compatibility
  - Single frequency reversion
  - Enable integration of other aircraft sensors

Coverage/Availability Results

	Constellation					
Architecture	24 minus 1	24	27 minus 1	27	30 minus 1	30
GIC	86.6%	100%	97.8%	100%	100%	100%
RRAIM 30 s coasting	81.2%	99.4%	96.8%	100%	100%	100%
RRAIM 60 s coasting	74.4%	98.5%	92.8%	100%	100%	100%
RRAIM 300 s coasting	28.0%	76.1%	52.3%	99.6%	93.9%	100%
ARAIM	7.80%	44.7%	30.6%	94.1%	90.5%	100%

	Ground to air latency
GIC	seconds
RRAIM	minutes
ARAIM	hours