Finite Automata

Part Three

Recap from Last Time

A language L is called a ***regular language*** if there exists a DFA D such that $\mathscr{L}(D) = L$.

NFAs

- An **NFA** is a
  - **N**ondeterministic
  - **F**inite
  - **A**utomaton
- Can have missing transitions or multiple transitions defined on the same input symbol.
- Accepts if *any possible series of choices* leads to an accepting state.

ε-Transitions

- NFAs have a special type of transition called the **ε-transition**.
- An NFA may follow any number of ε-transitions at any time without consuming any input.

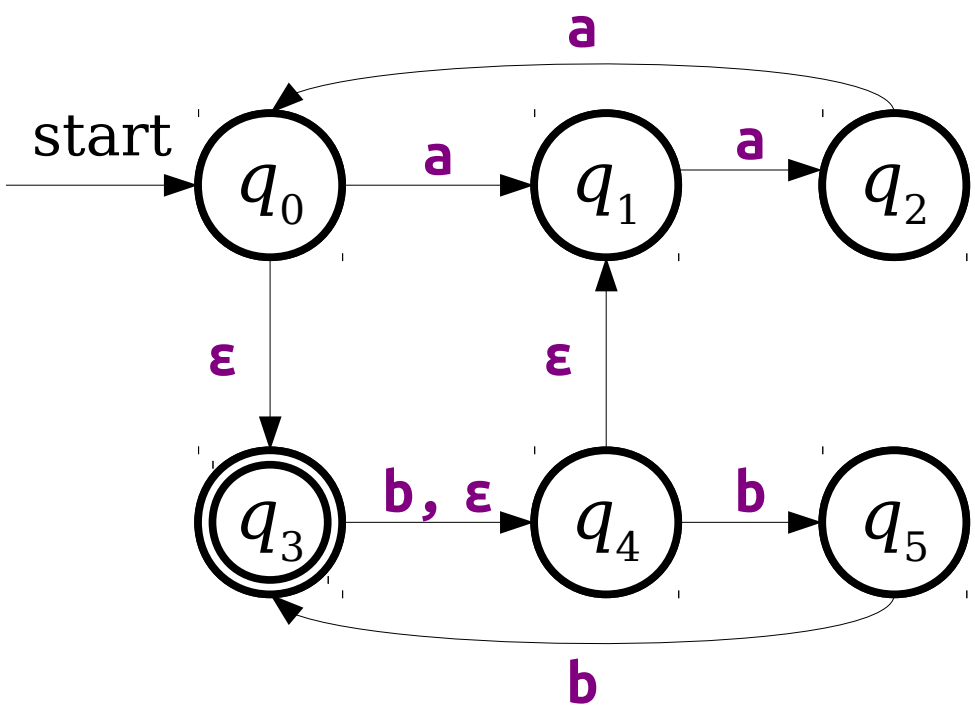

b a a b b

ε-Transitions

- NFAs have a special type of transition called the **ε-transition**.
- An NFA may follow any number of ε-transitions at any time without consuming any input.

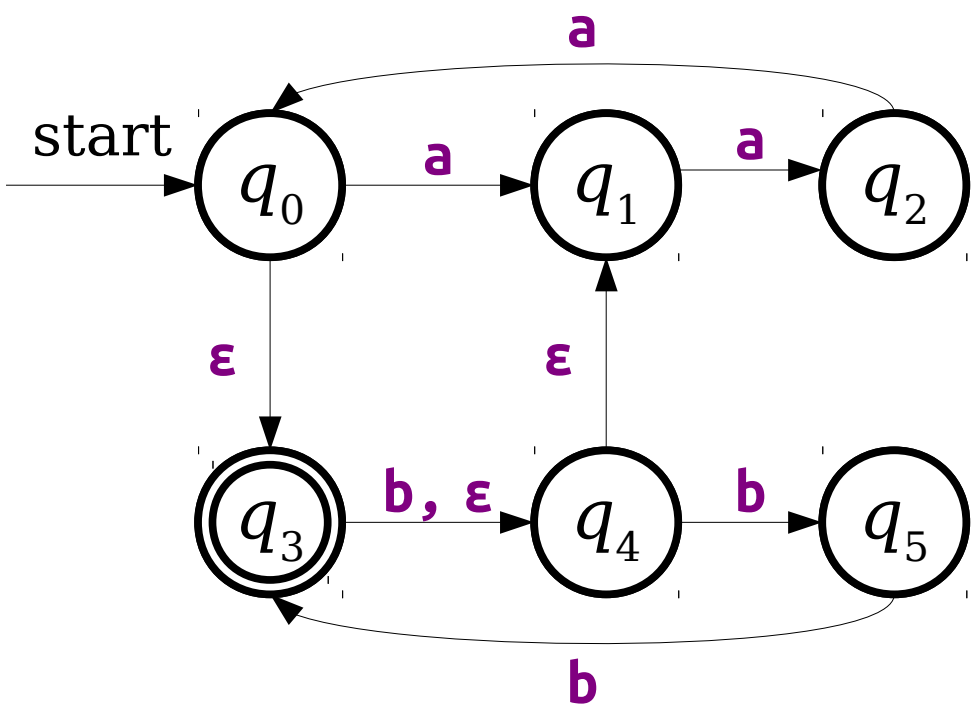

ε-Transitions

- NFAs have a special type of transition called the **ε-transition**.
- An NFA may follow any number of ε-transitions at any time without consuming any input.

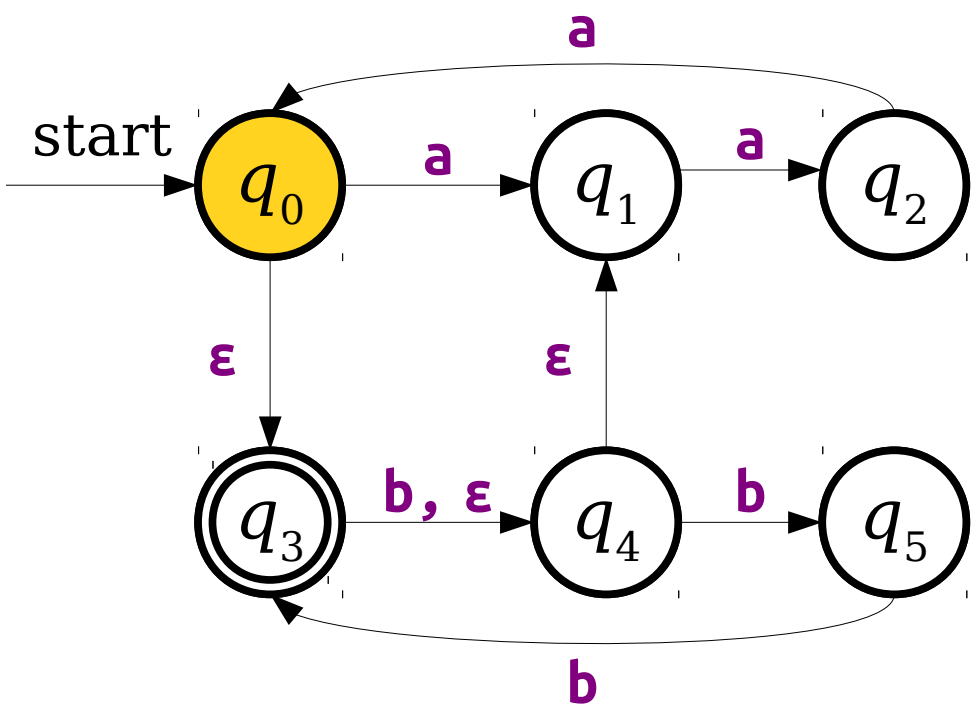

ε-Transitions

- NFAs have a special type of transition called the **ε-transition**.
- An NFA may follow any number of ε-transitions at any time without consuming any input.

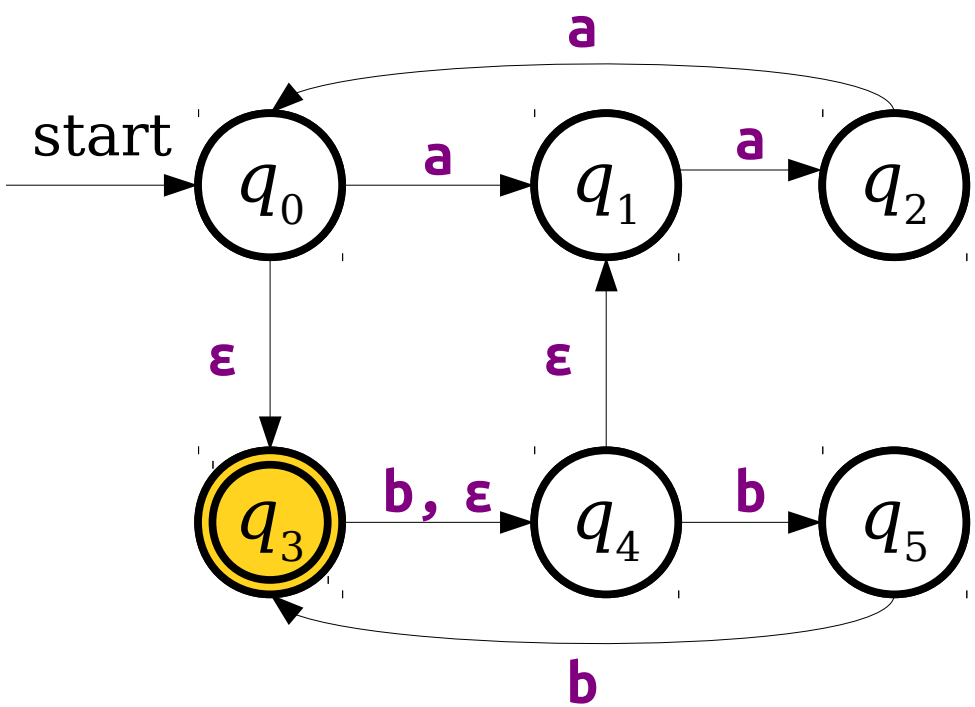

ε-Transitions

- NFAs have a special type of transition called the **ε-transition**.
- An NFA may follow any number of ε-transitions at any time without consuming any input.

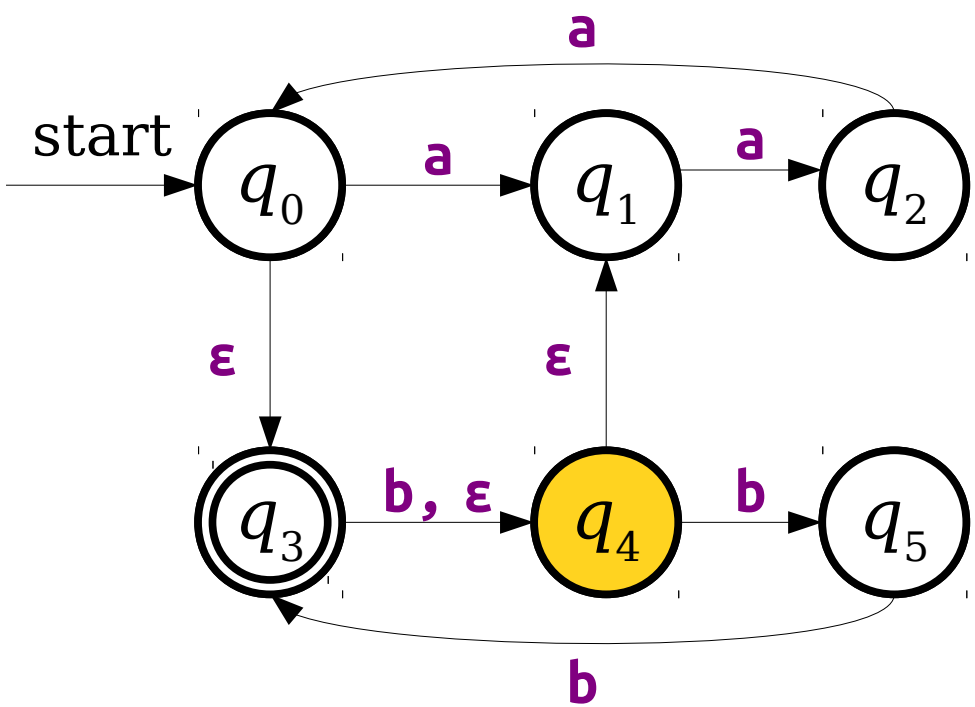

ε-Transitions

- NFAs have a special type of transition called the **ε-transition**.
- An NFA may follow any number of ε-transitions at any time without consuming any input.

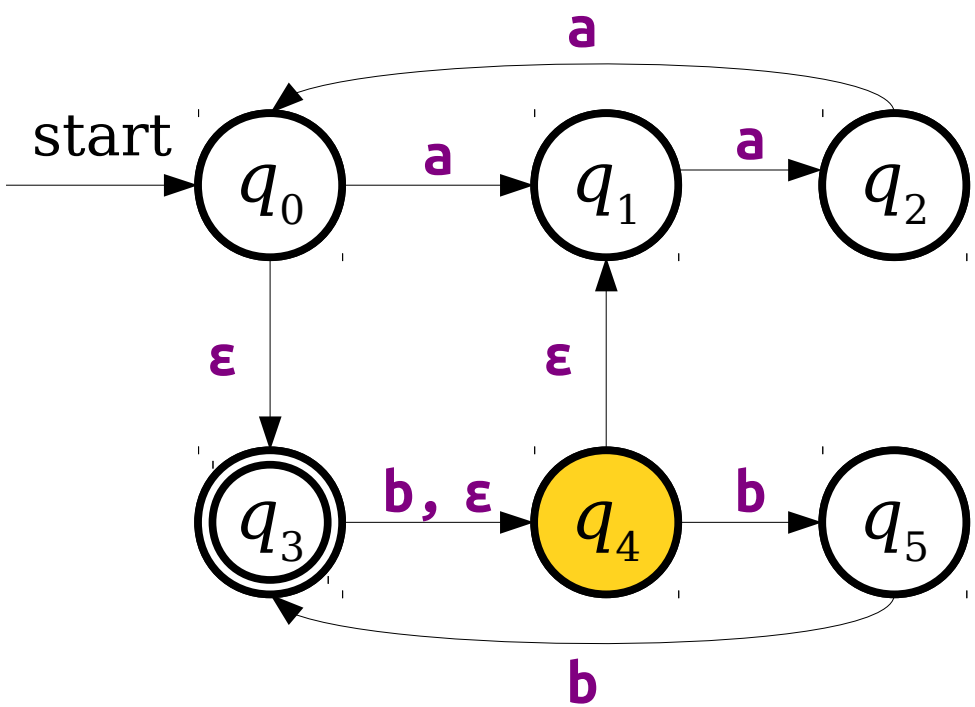

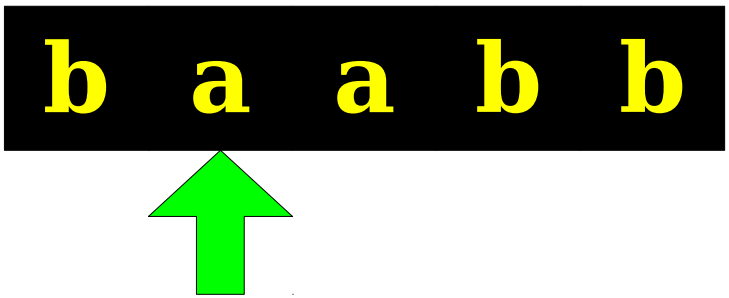

ε-Transitions

- NFAs have a special type of transition called the **ε-transition**.
- An NFA may follow any number of ε-transitions at any time without consuming any input.

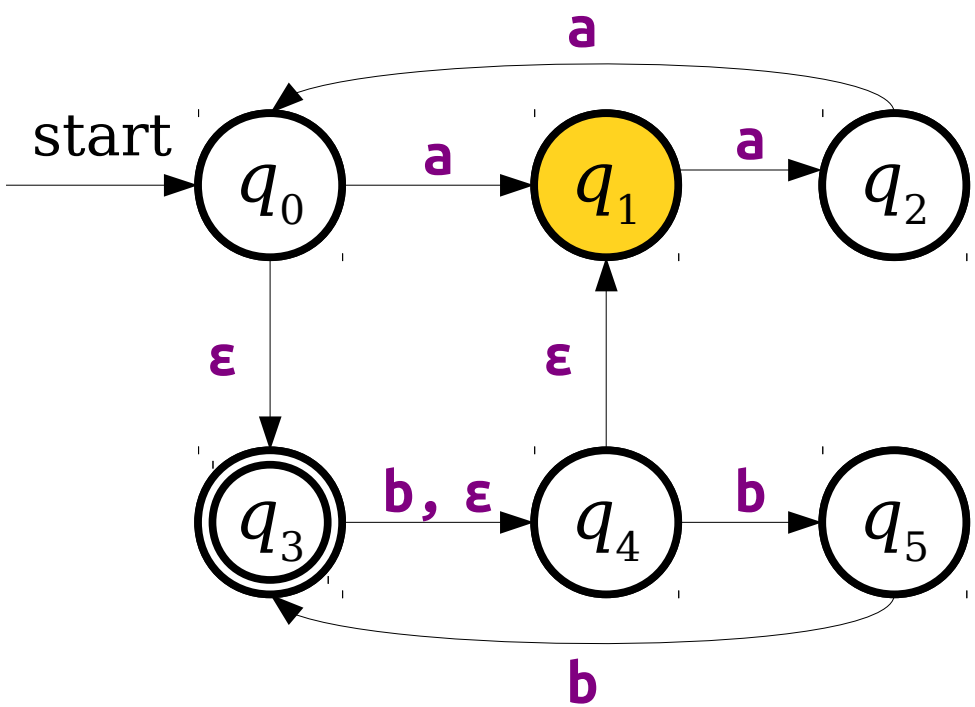

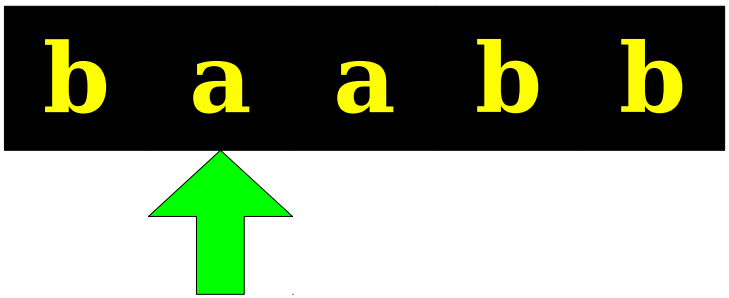

ε-Transitions

- NFAs have a special type of transition called the **ε-transition**.
- An NFA may follow any number of ε-transitions at any time without consuming any input.

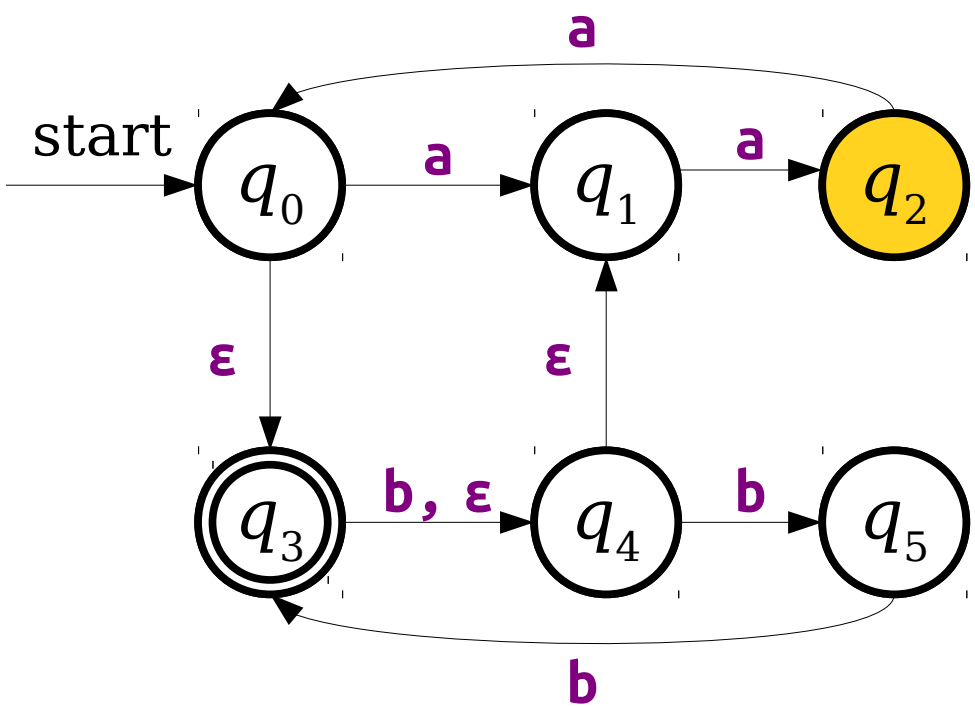

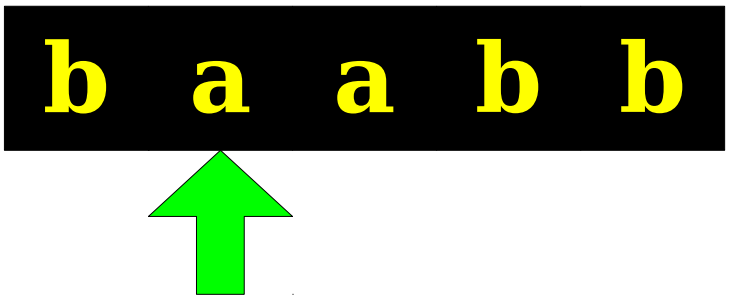

ε-Transitions

- NFAs have a special type of transition called the **ε-transition**.
- An NFA may follow any number of ε-transitions at any time without consuming any input.

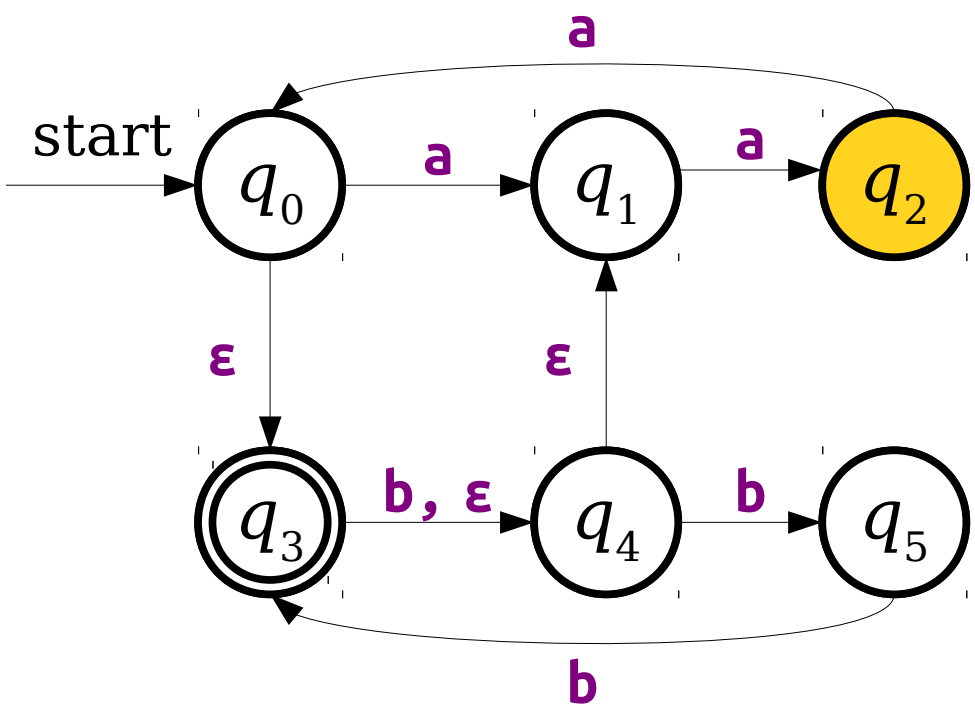

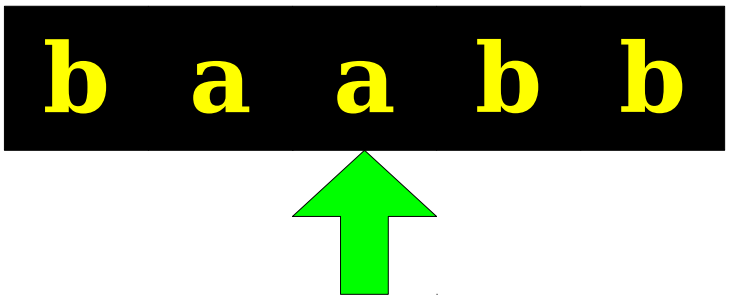

ε-Transitions

- NFAs have a special type of transition called the **ε-transition**.
- An NFA may follow any number of ε-transitions at any time without consuming any input.

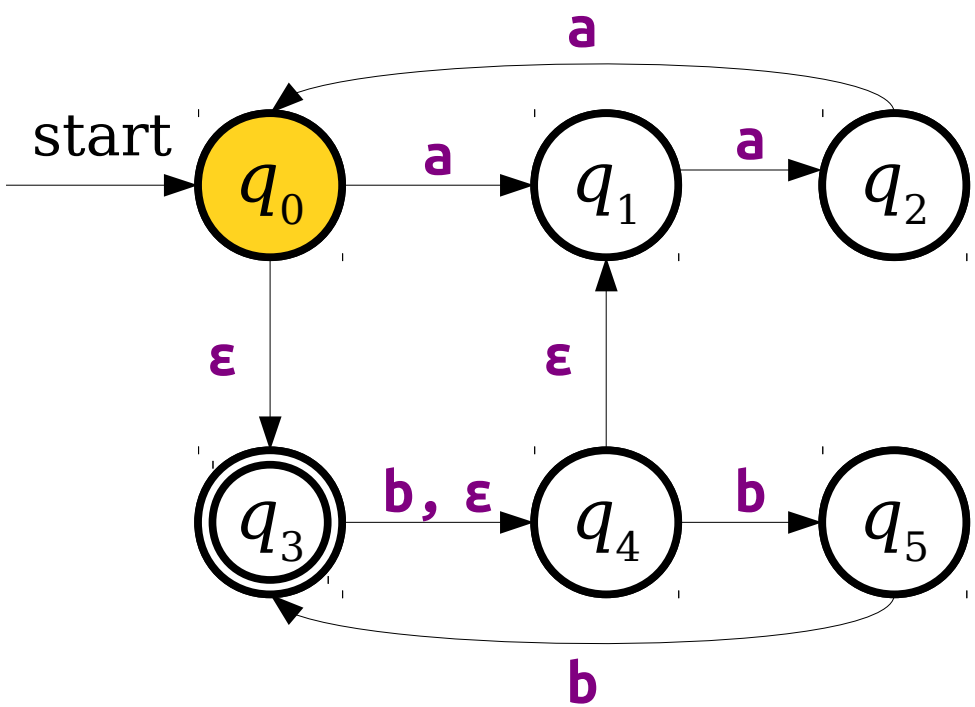

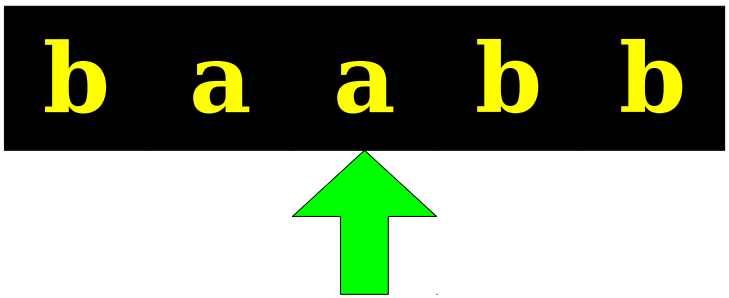

ε-Transitions

- NFAs have a special type of transition called the **ε-transition**.
- An NFA may follow any number of ε-transitions at any time without consuming any input.

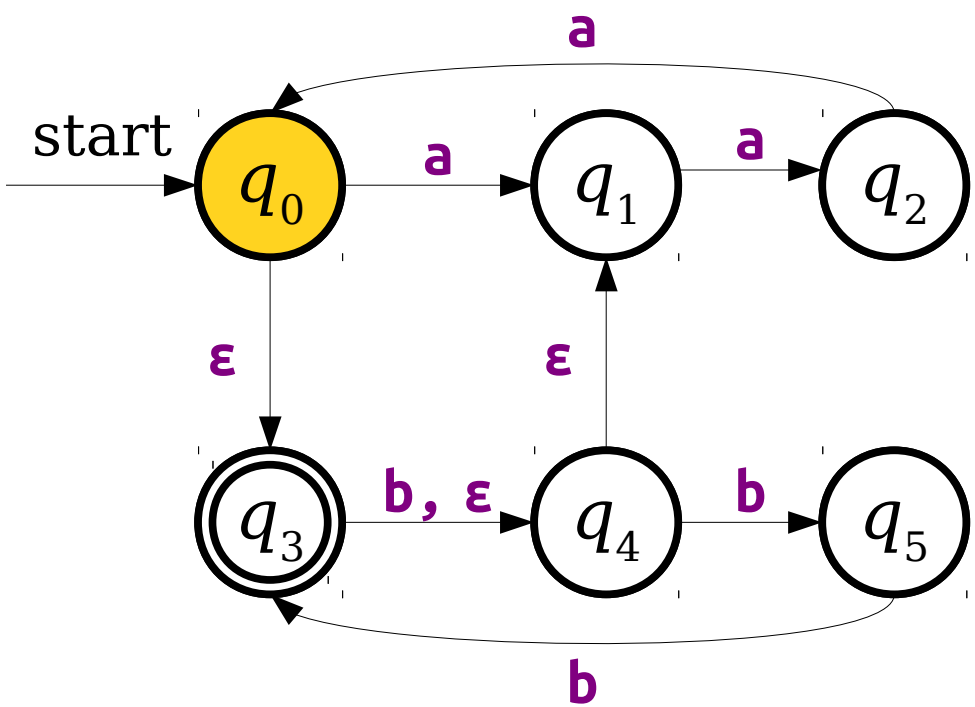

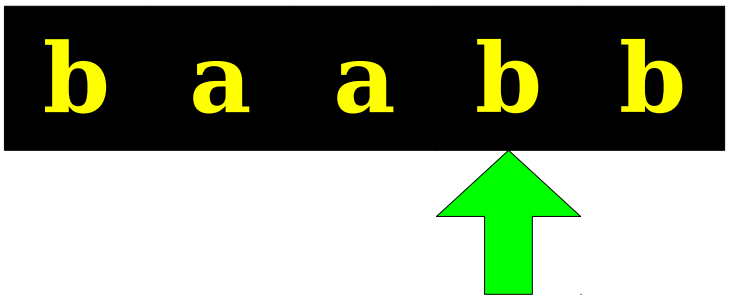

ε-Transitions

- NFAs have a special type of transition called the **ε-transition**.
- An NFA may follow any number of ε-transitions at any time without consuming any input.

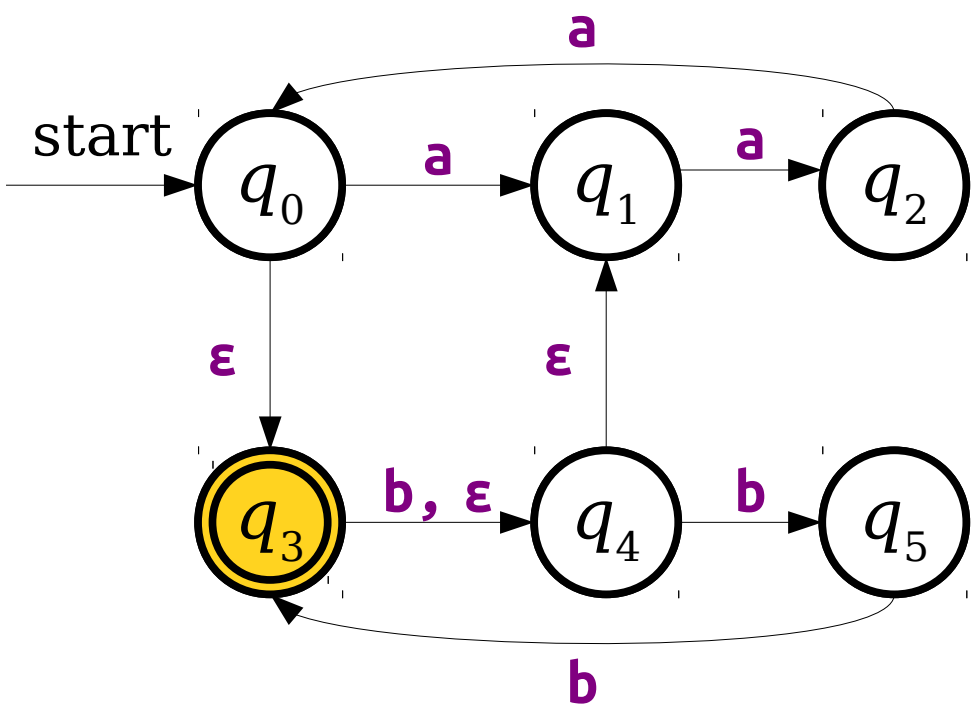

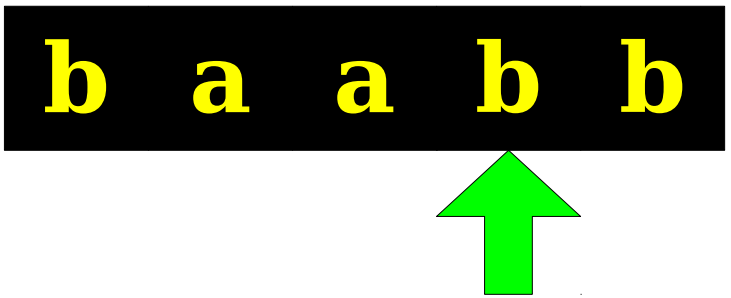

ε-Transitions

- NFAs have a special type of transition called the **ε-transition**.
- An NFA may follow any number of ε-transitions at any time without consuming any input.

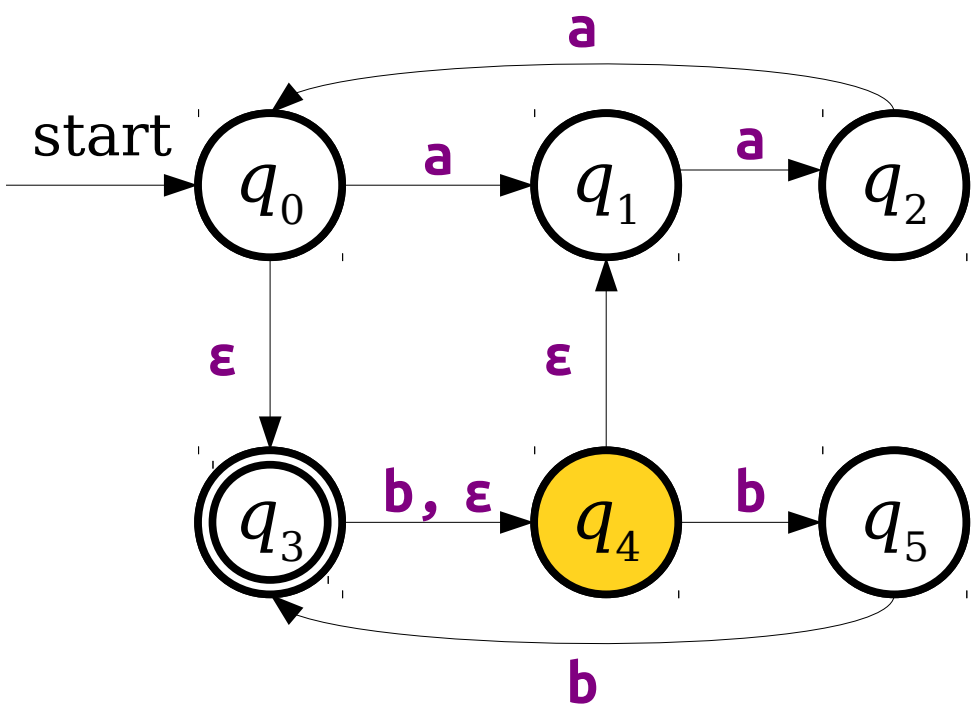

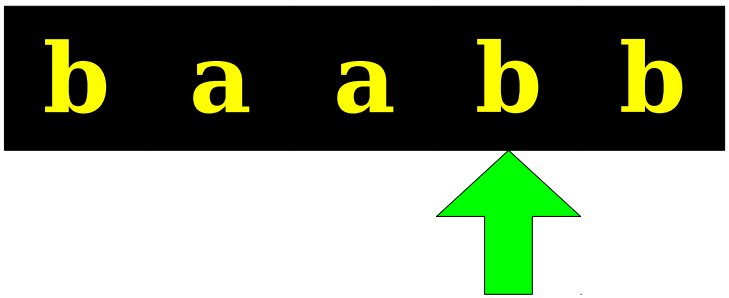

ε-Transitions

- NFAs have a special type of transition called the **ε-transition**.
- An NFA may follow any number of ε-transitions at any time without consuming any input.

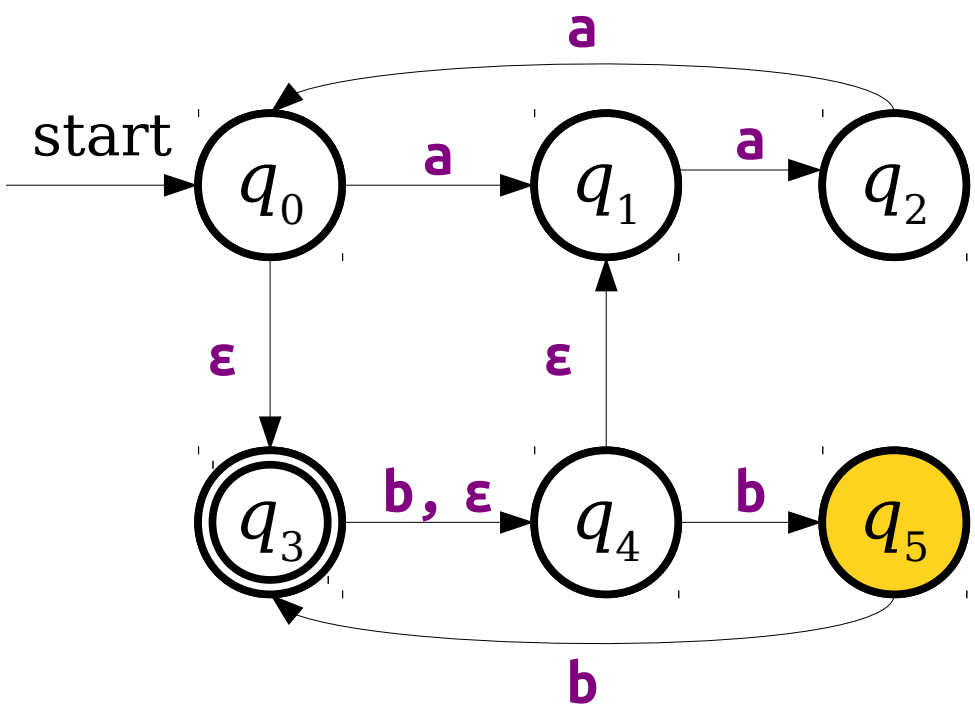

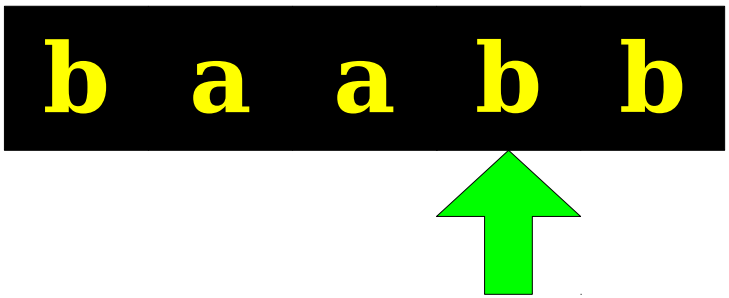

ε-Transitions

- NFAs have a special type of transition called the **ε-transition**.
- An NFA may follow any number of ε-transitions at any time without consuming any input.

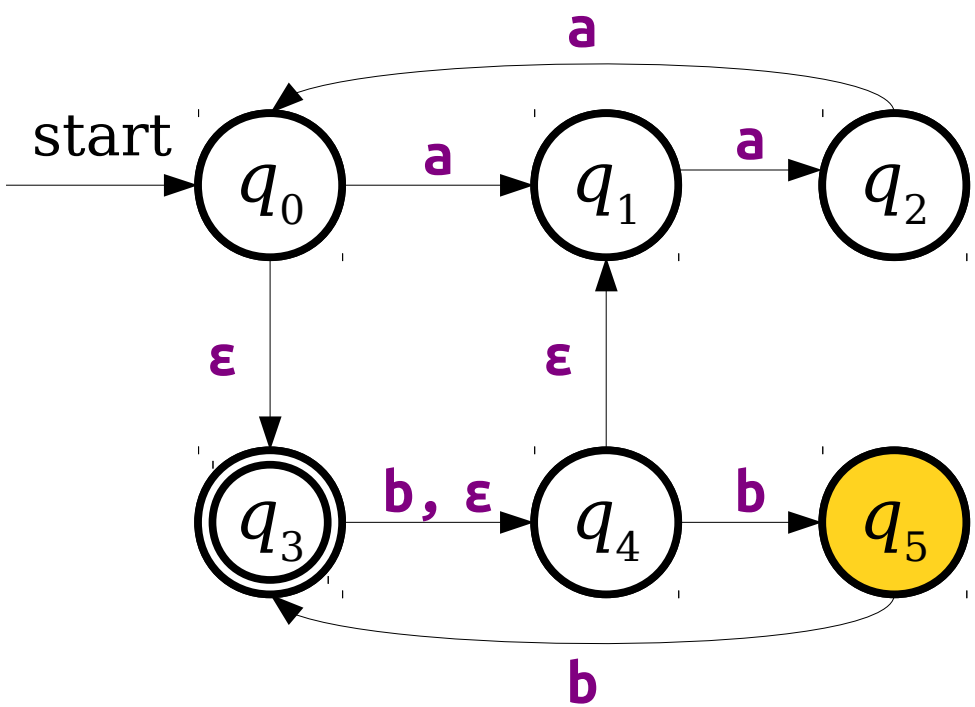

ε-Transitions

- NFAs have a special type of transition called the **ε-transition**.
- An NFA may follow any number of ε-transitions at any time without consuming any input.

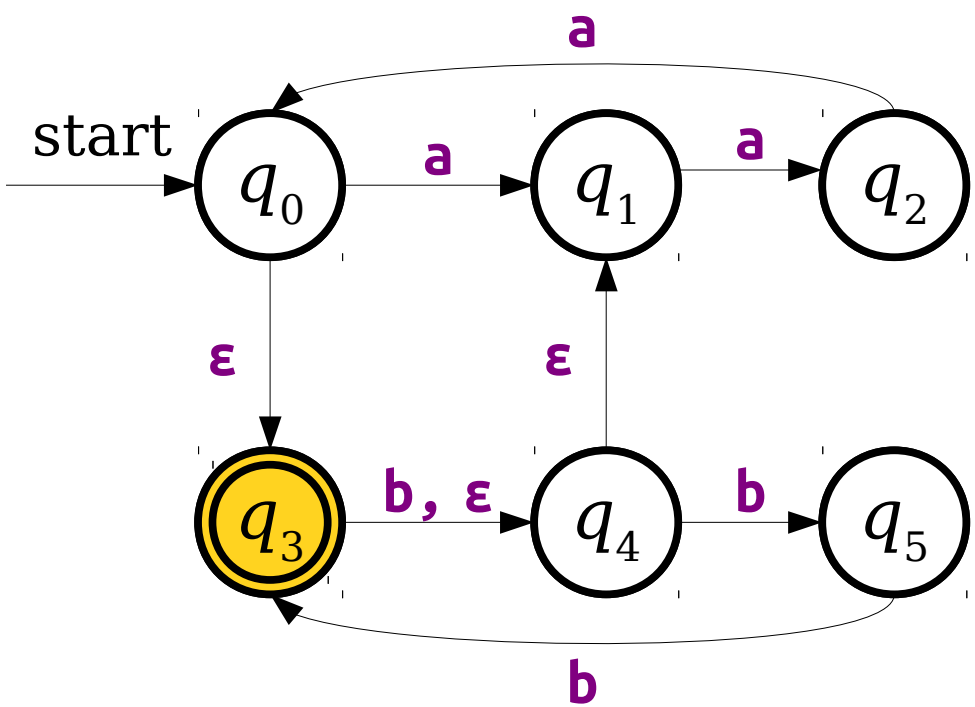

ε-Transitions

- NFAs have a special type of transition called the **ε-transition**.
- An NFA may follow any number of ε-transitions at any time without consuming any input.

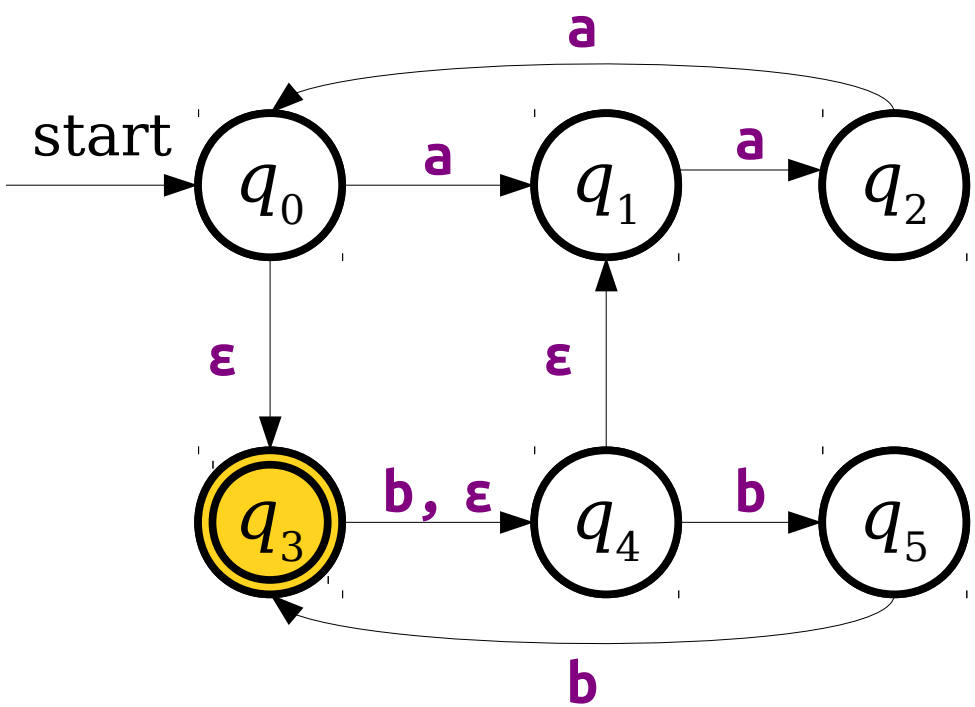

b a a b b

New Stuff!

DFAs and NFAs

NFAs and DFAs

- Any language that can be accepted by a DFA can be accepted by an NFA.
- Why?
  - Just use the same set of transitions as before.
- ***Question:*** Can any language accepted by an NFA also be accepted by a DFA?
- Surprisingly, the answer is ***yes!***

Finite Automata

- NFAs and DFAs are *finite* automata; there can only be finitely many states in an NFA or DFA.
- An NFA can be in any combination of its states, but there are only finitely many possible combations.
- ***Idea:*** Build a DFA where each state of the DFA corresponds to a *set* of states in the NFA.

Simulating an NFA with a DFA

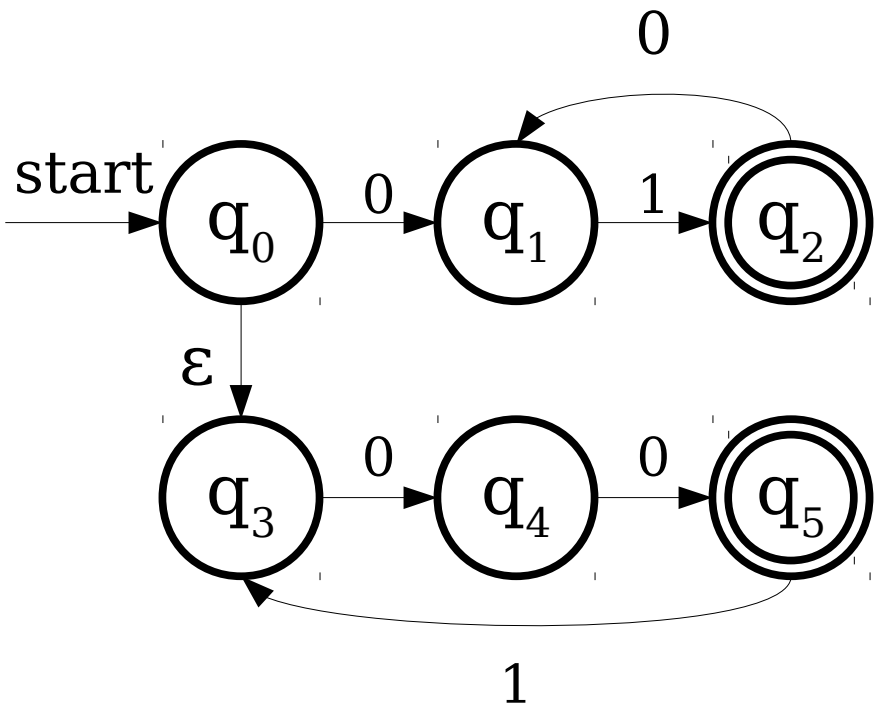

Simulating an NFA with a DFA

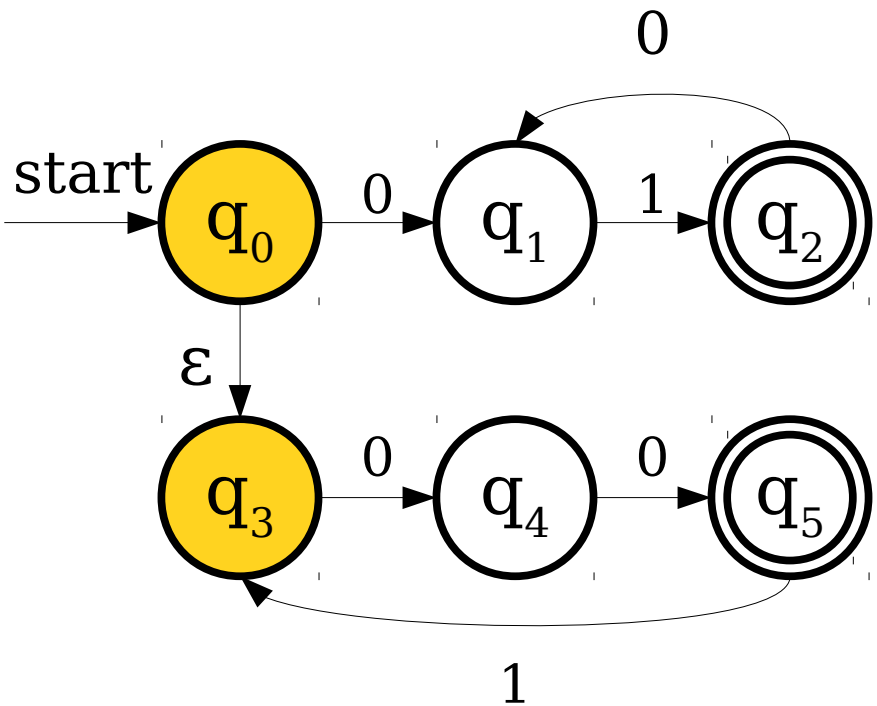

Simulating an NFA with a DFA

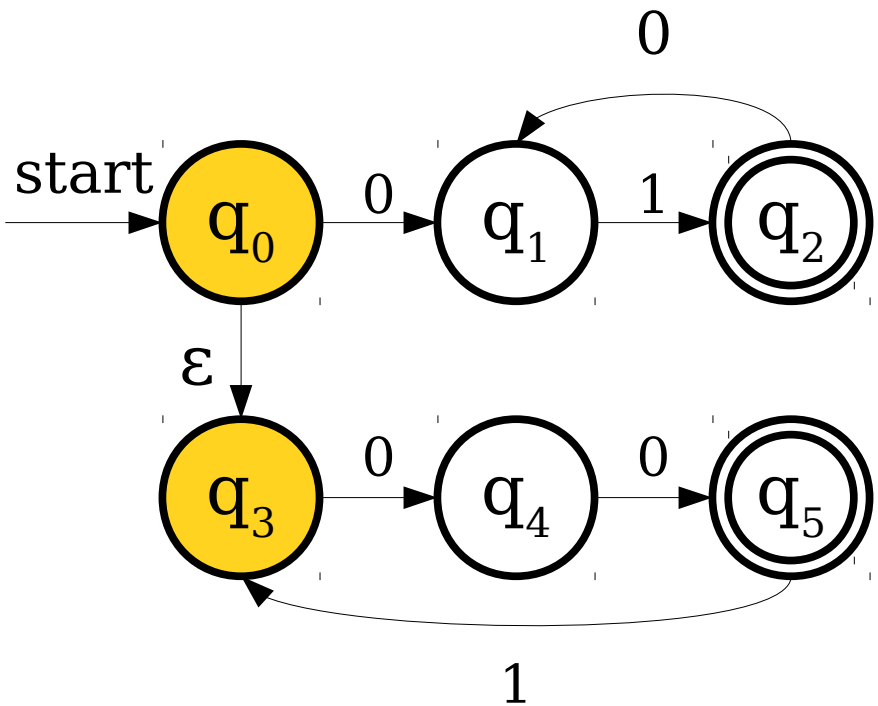

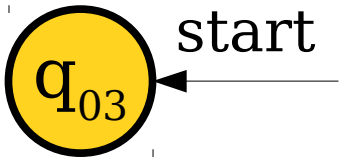

Simulating an NFA with a DFA

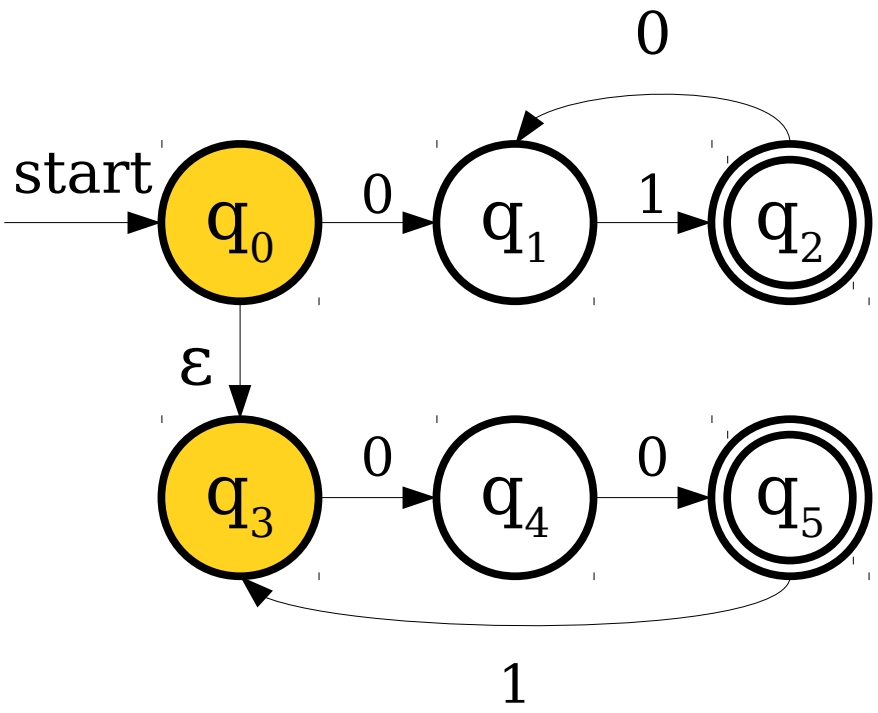

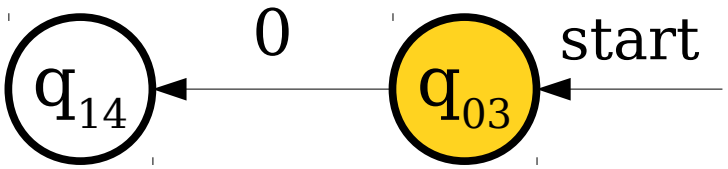

Simulating an NFA with a DFA

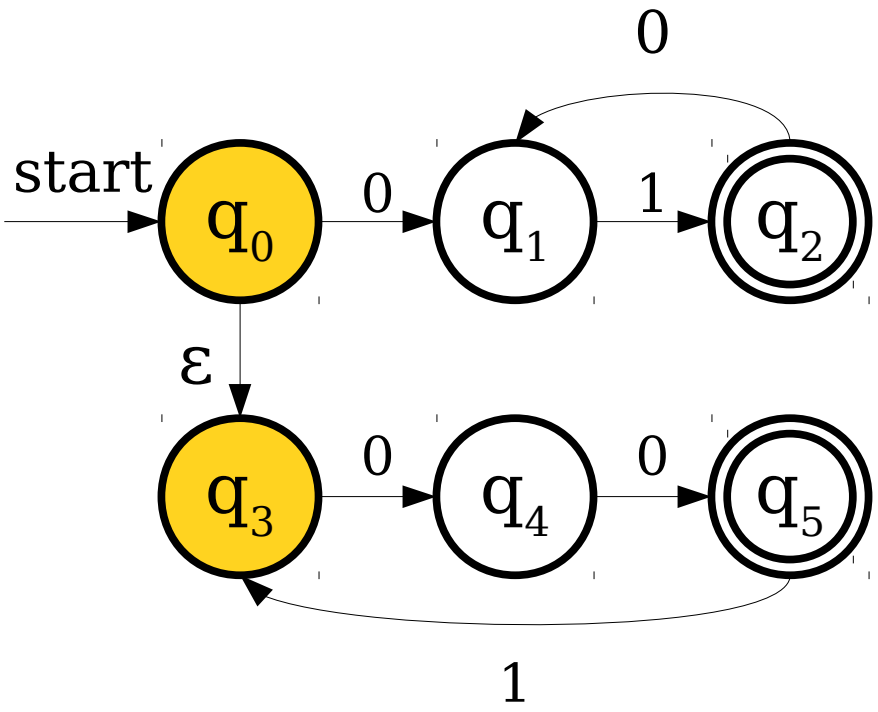

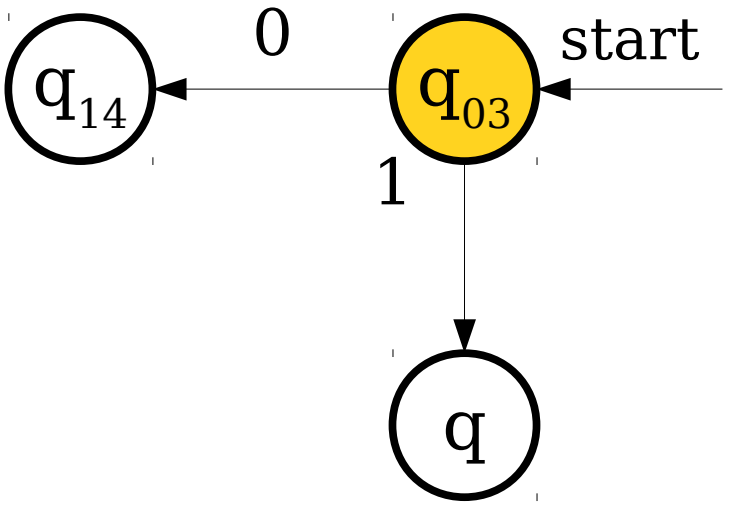

Simulating an NFA with a DFA

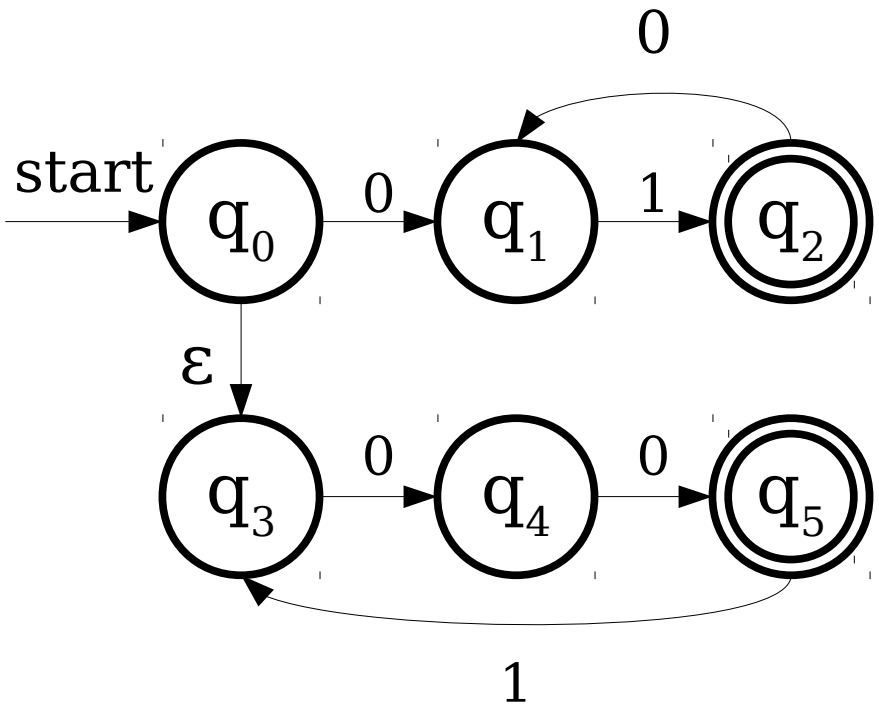

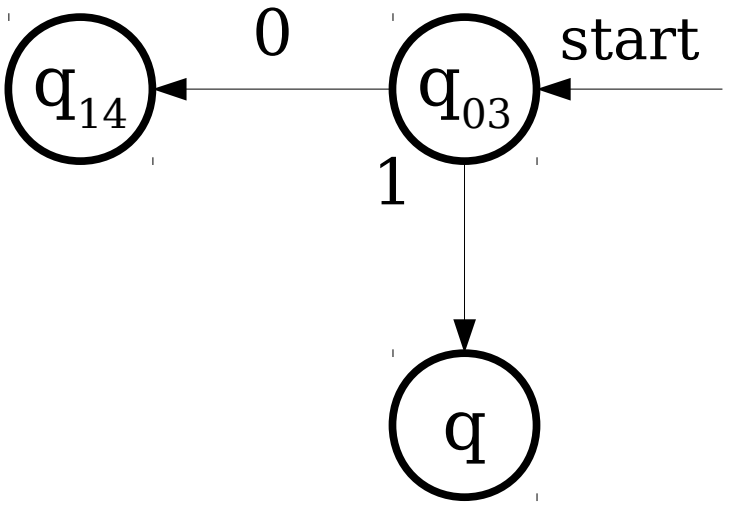

Simulating an NFA with a DFA

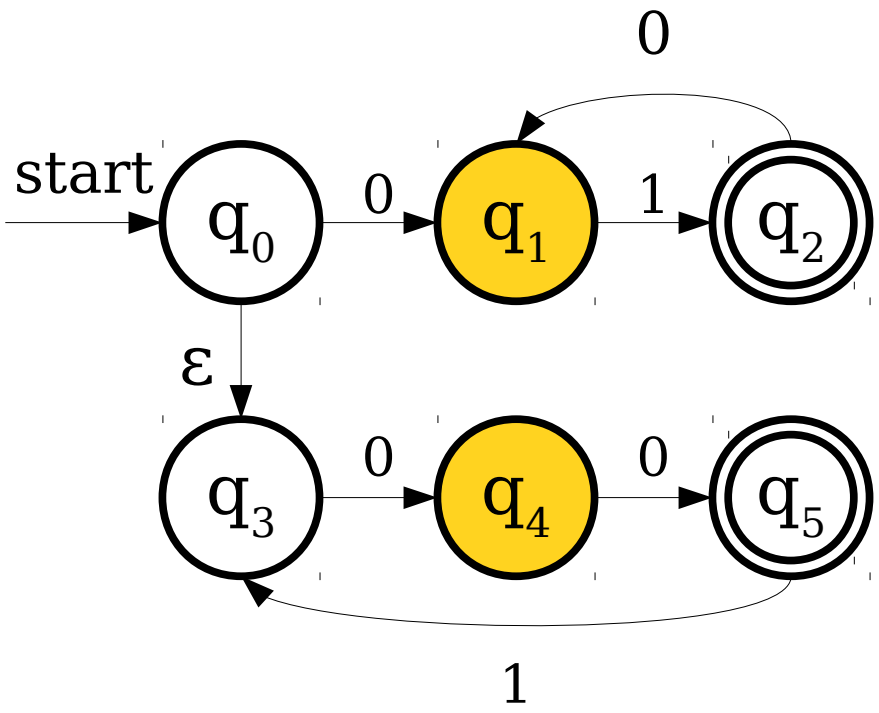

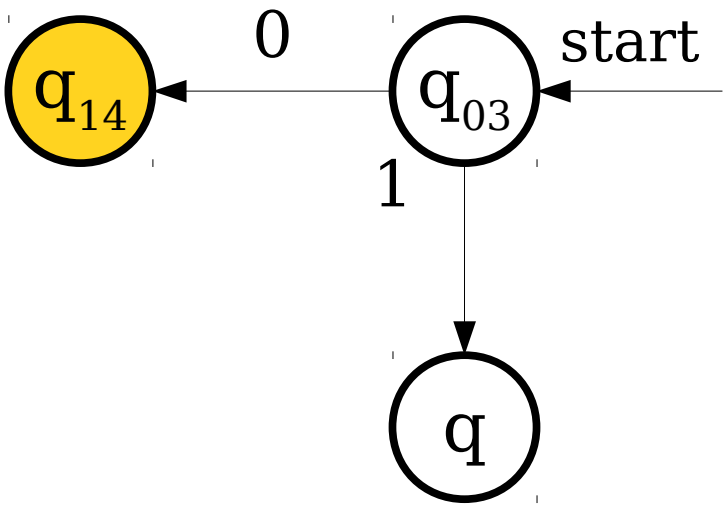

Simulating an NFA with a DFA

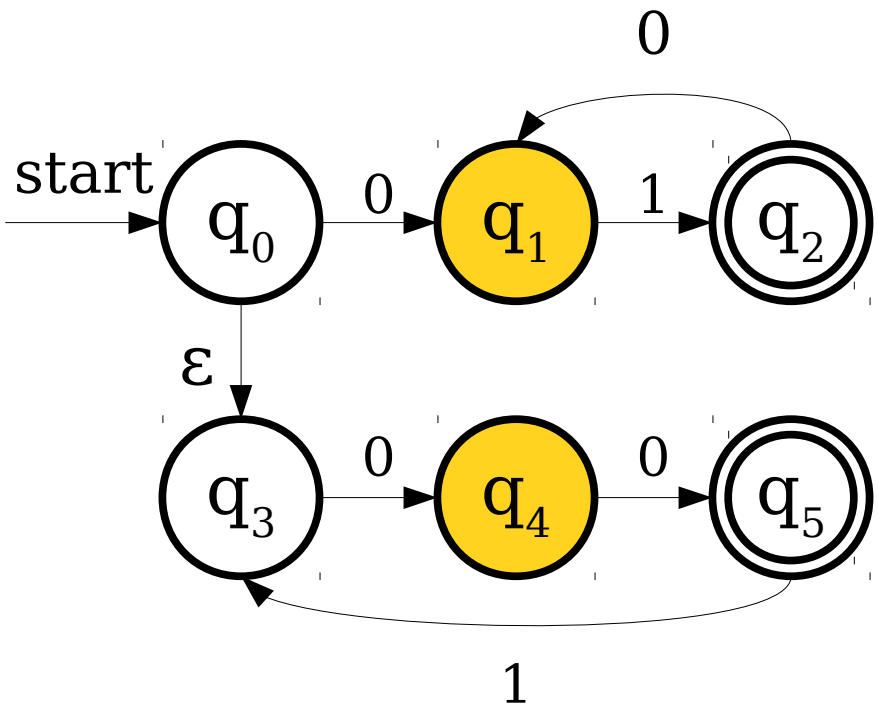

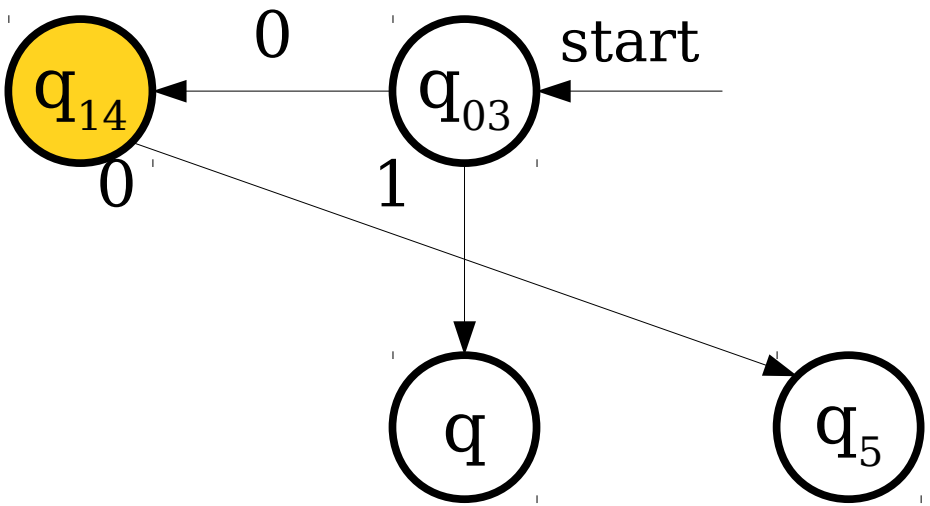

Simulating an NFA with a DFA

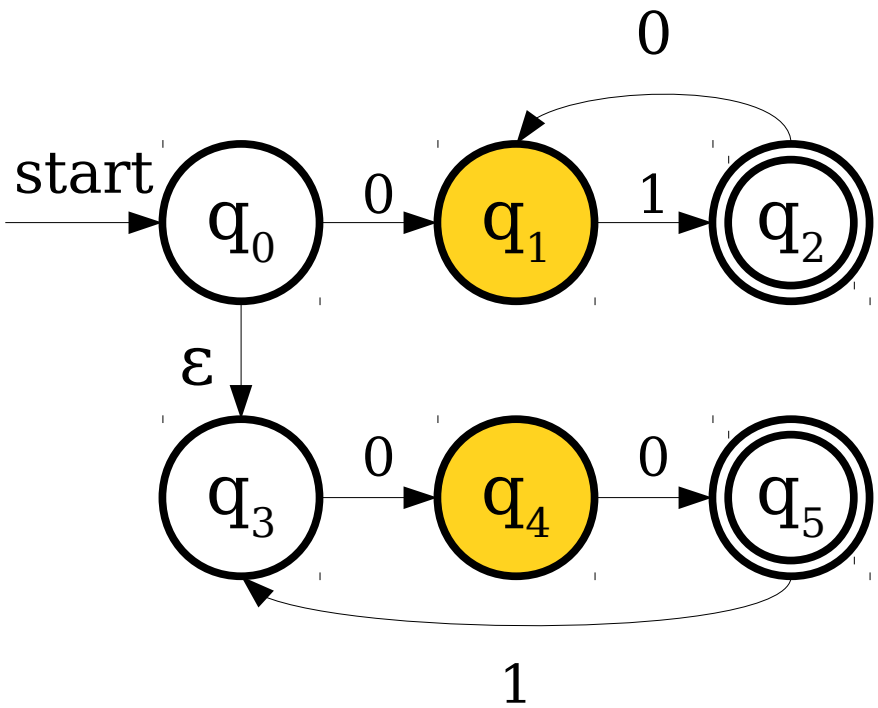

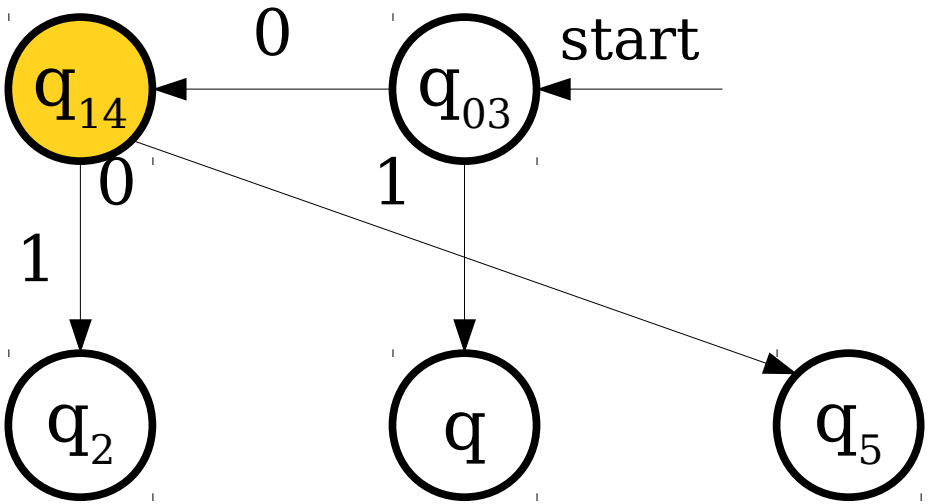

Simulating an NFA with a DFA

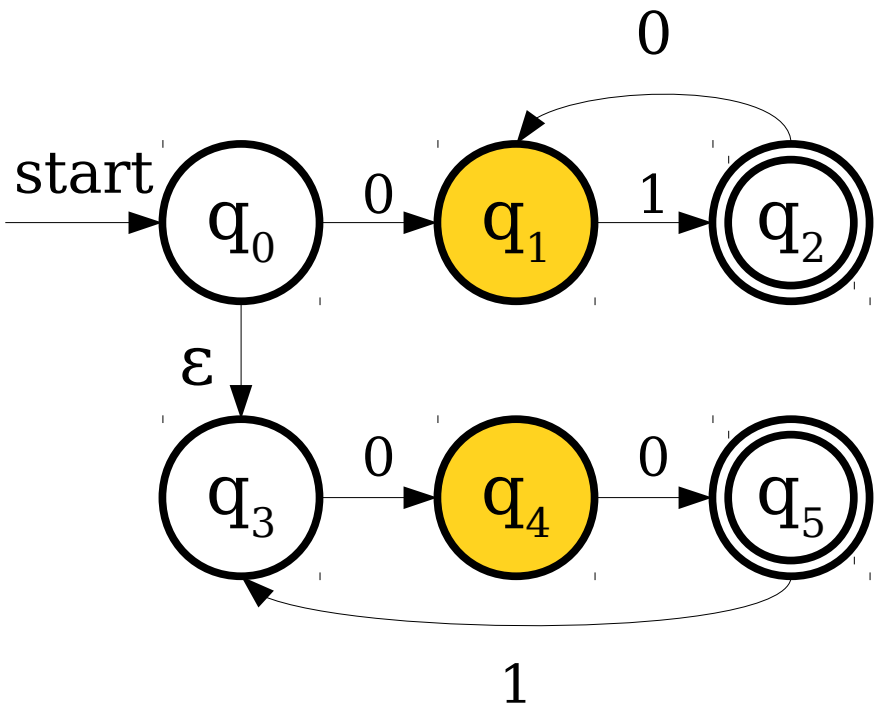

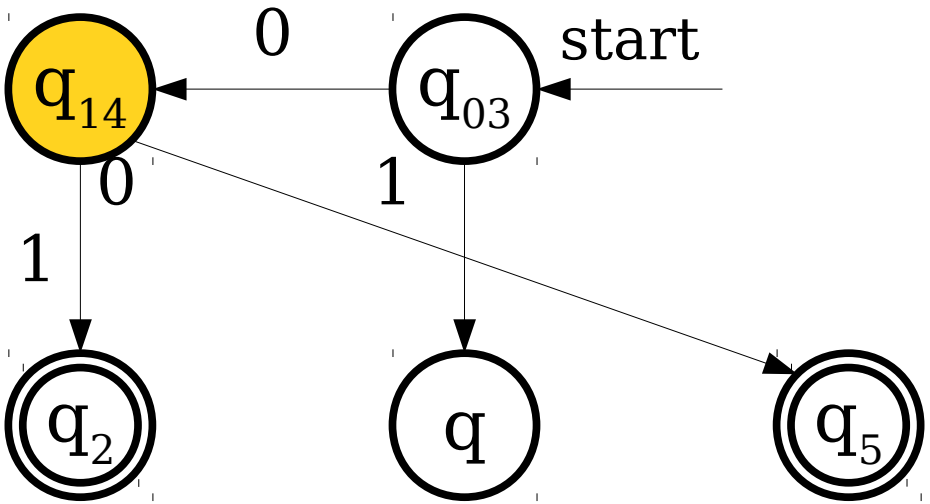

Simulating an NFA with a DFA

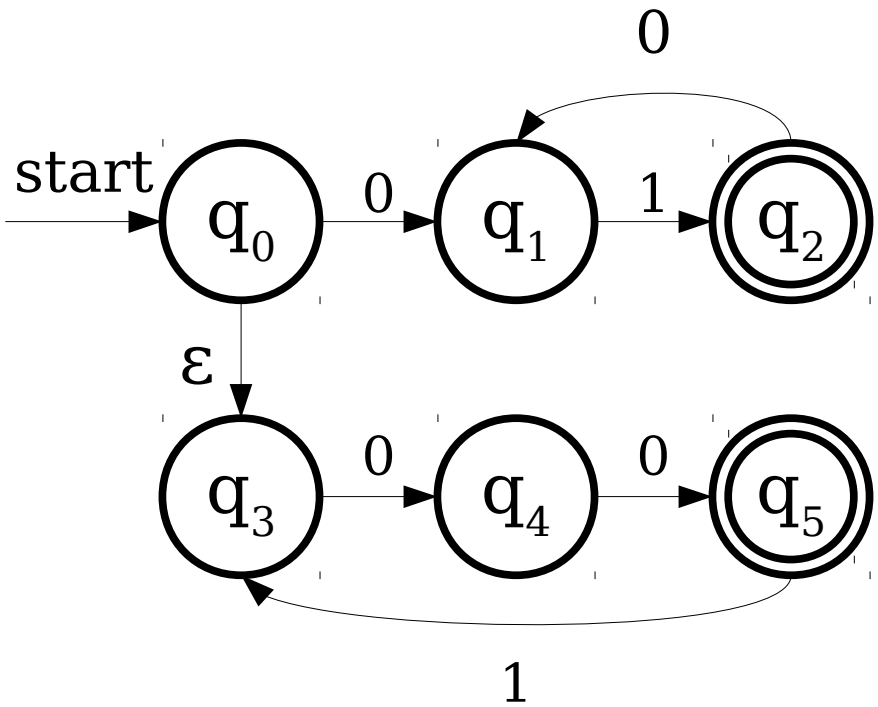

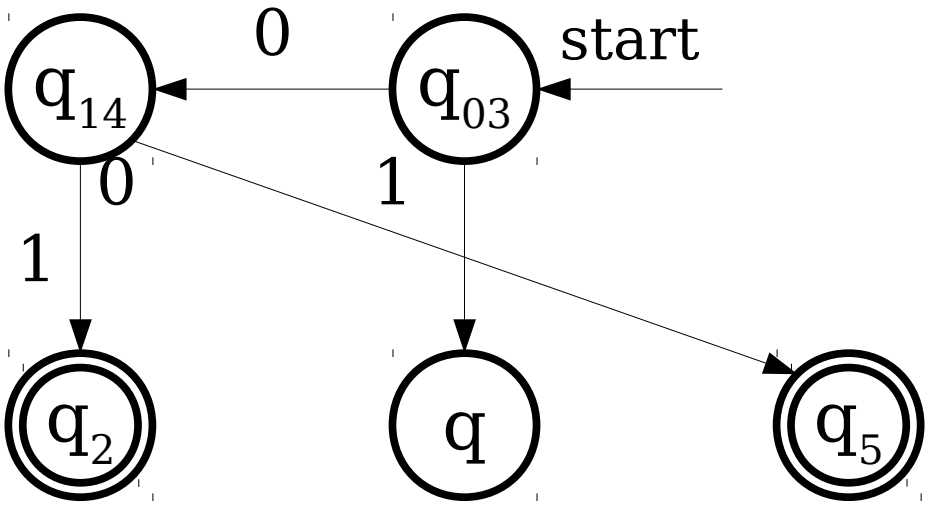

Simulating an NFA with a DFA

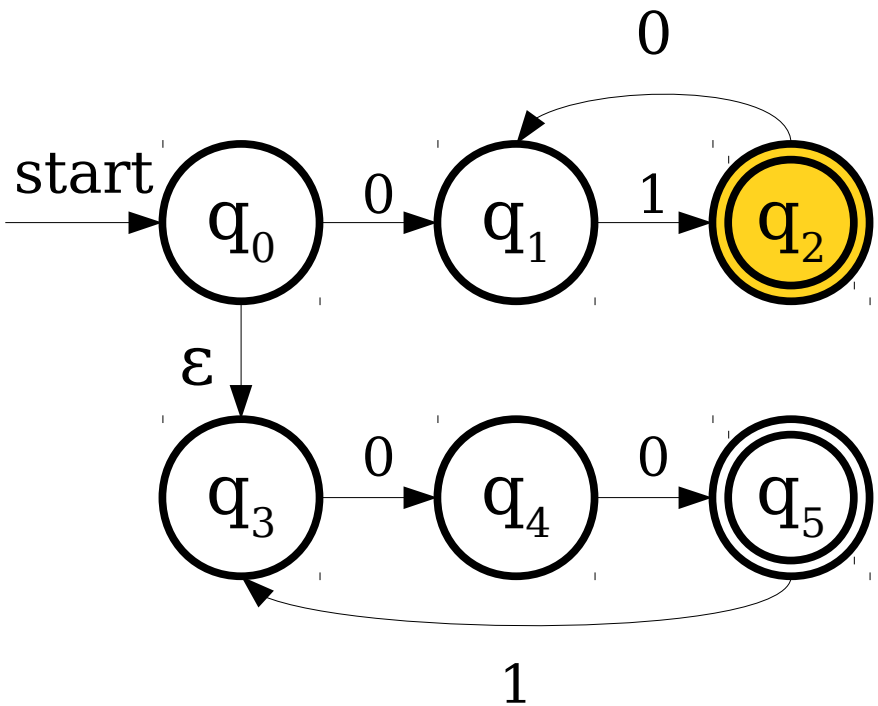

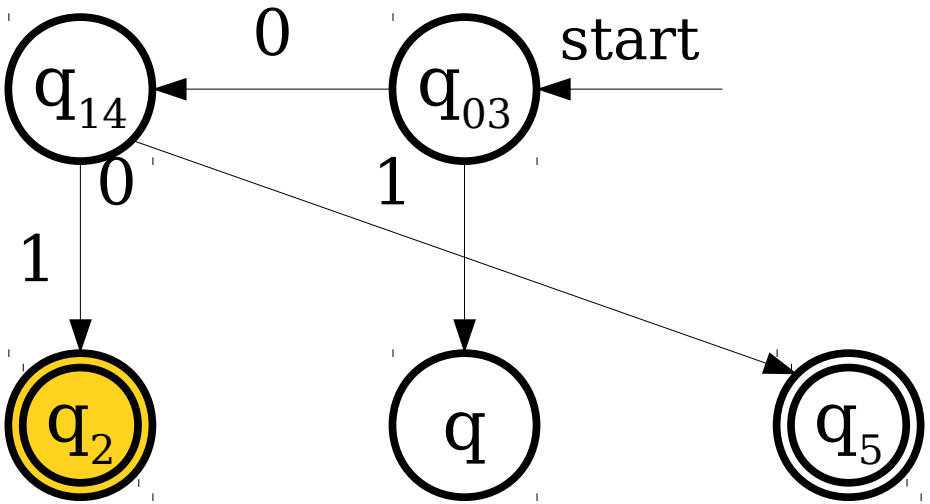

Simulating an NFA with a DFA

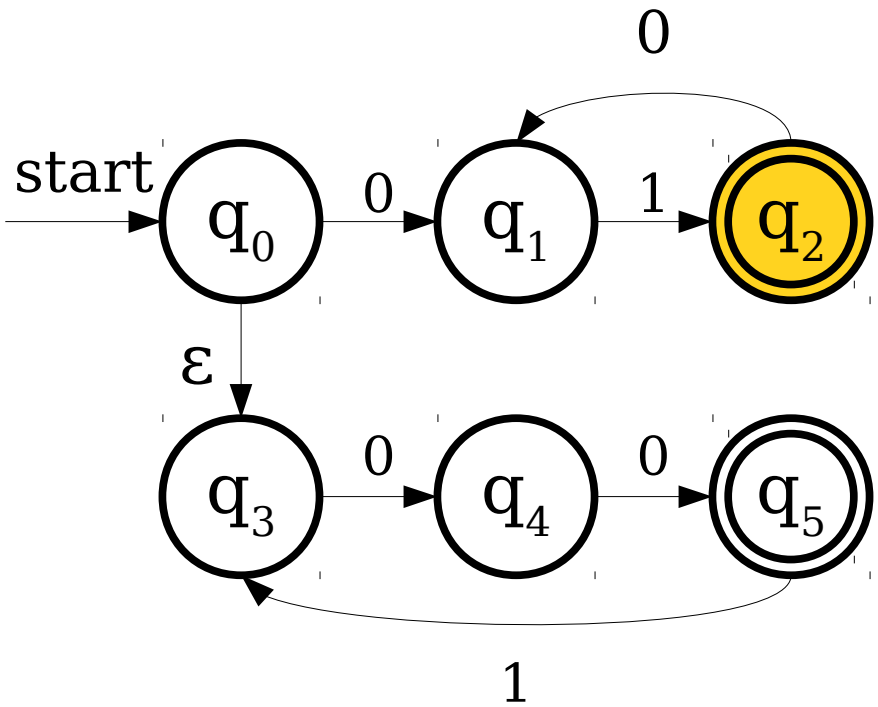

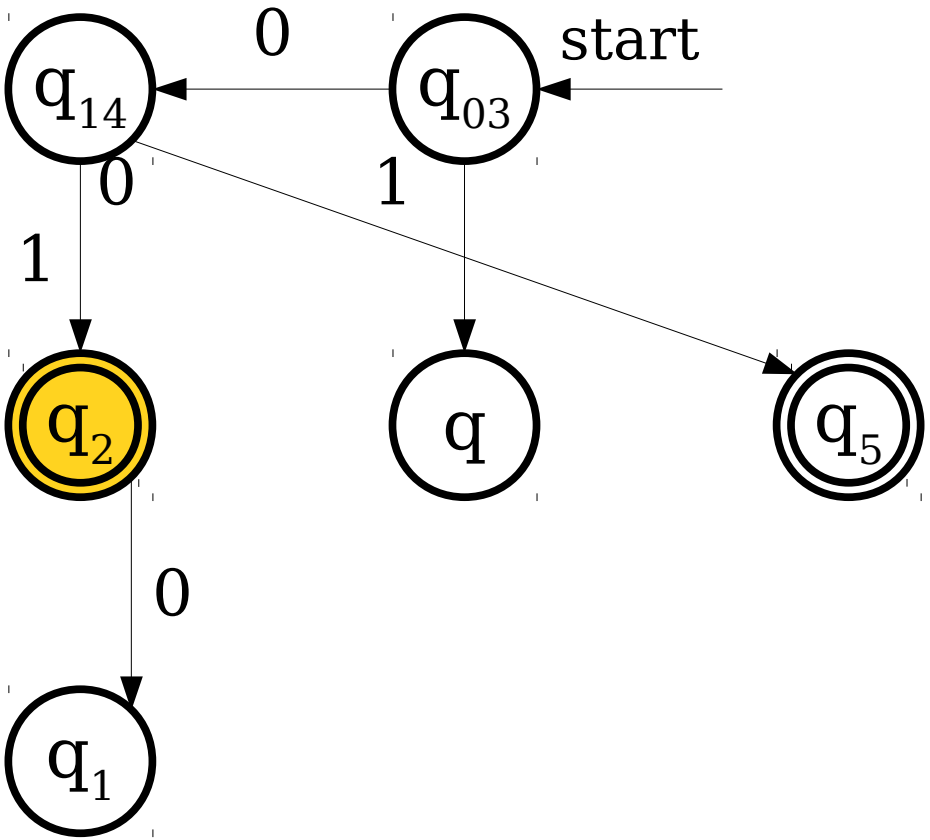

Simulating an NFA with a DFA

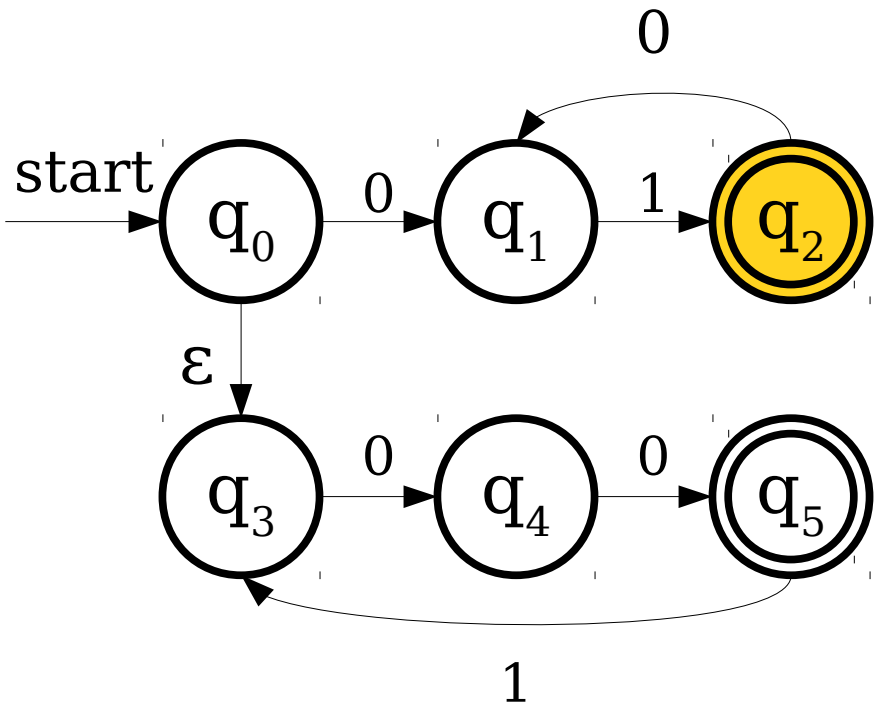

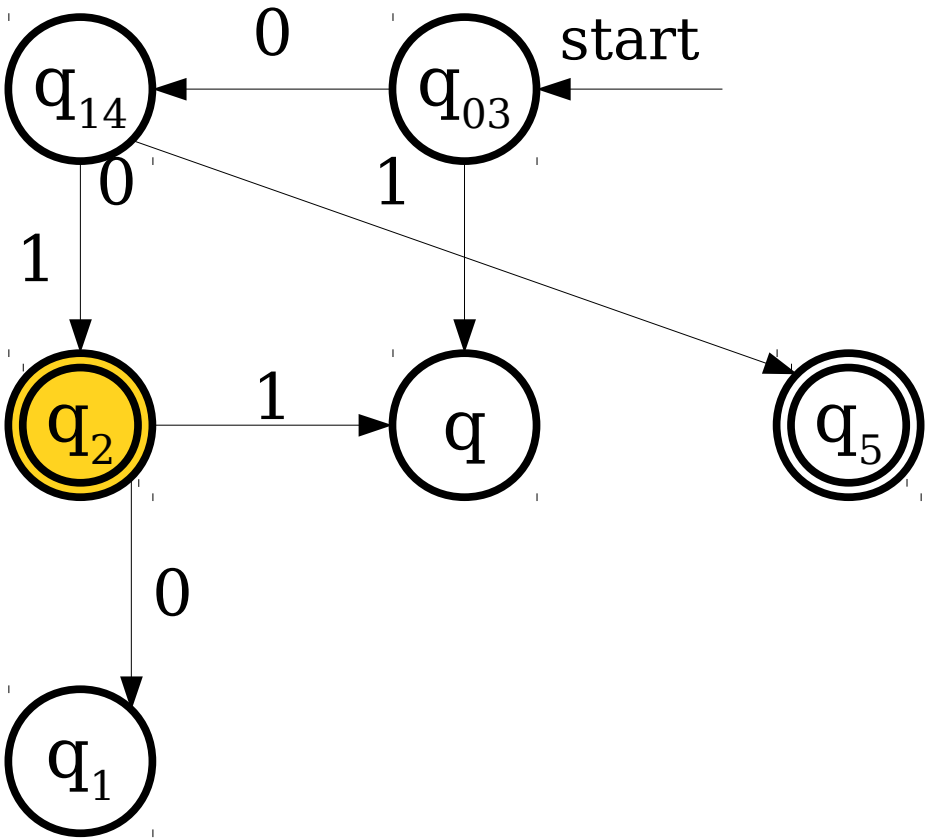

Simulating an NFA with a DFA

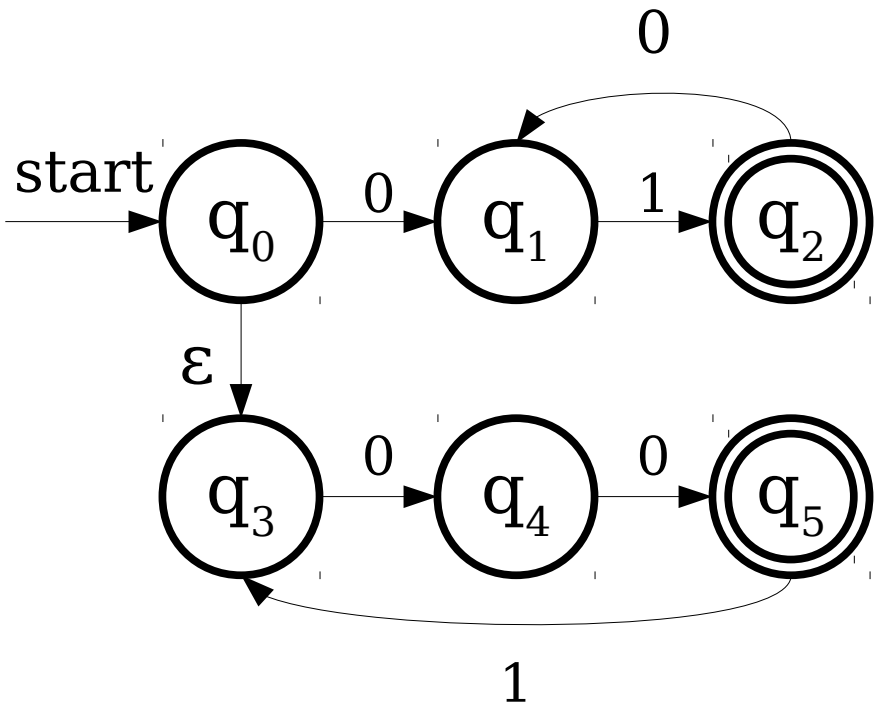

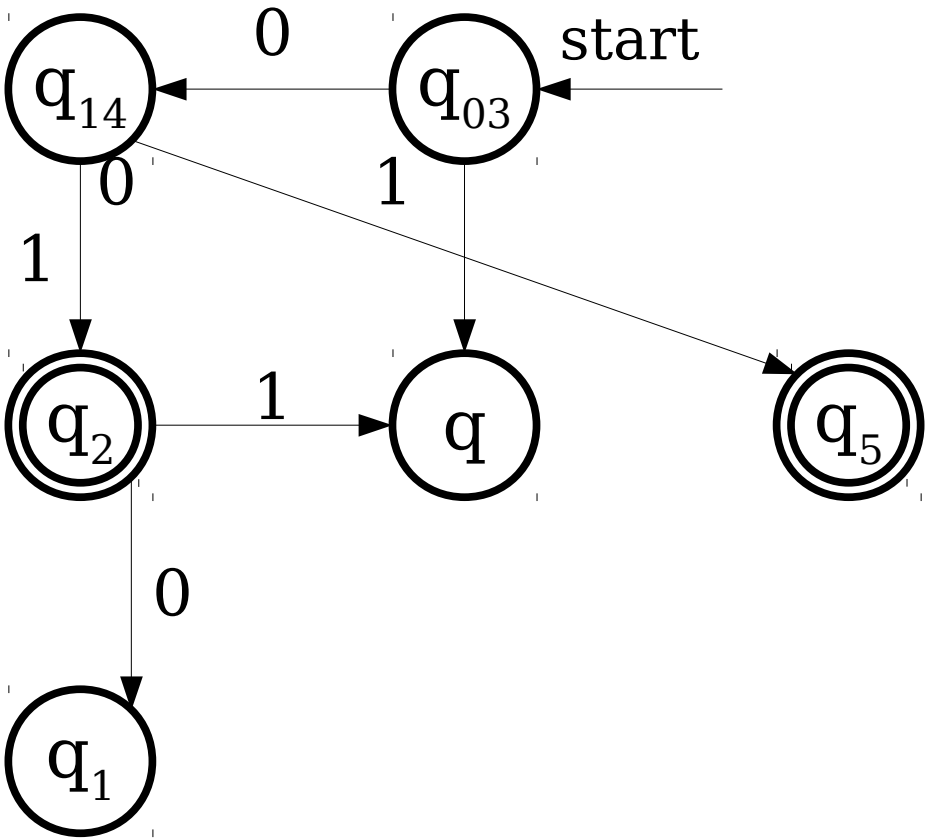

Simulating an NFA with a DFA

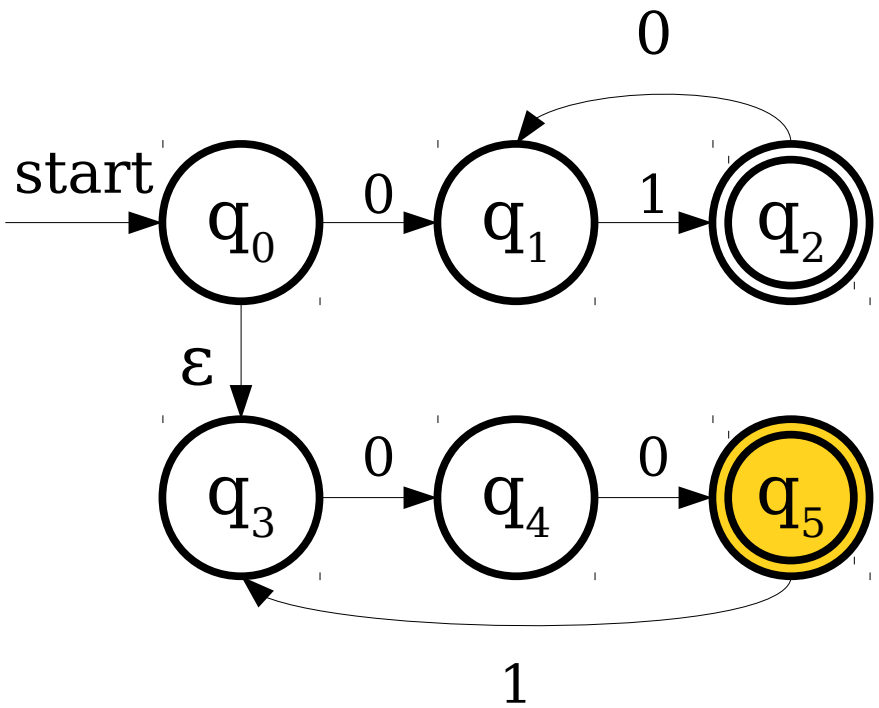

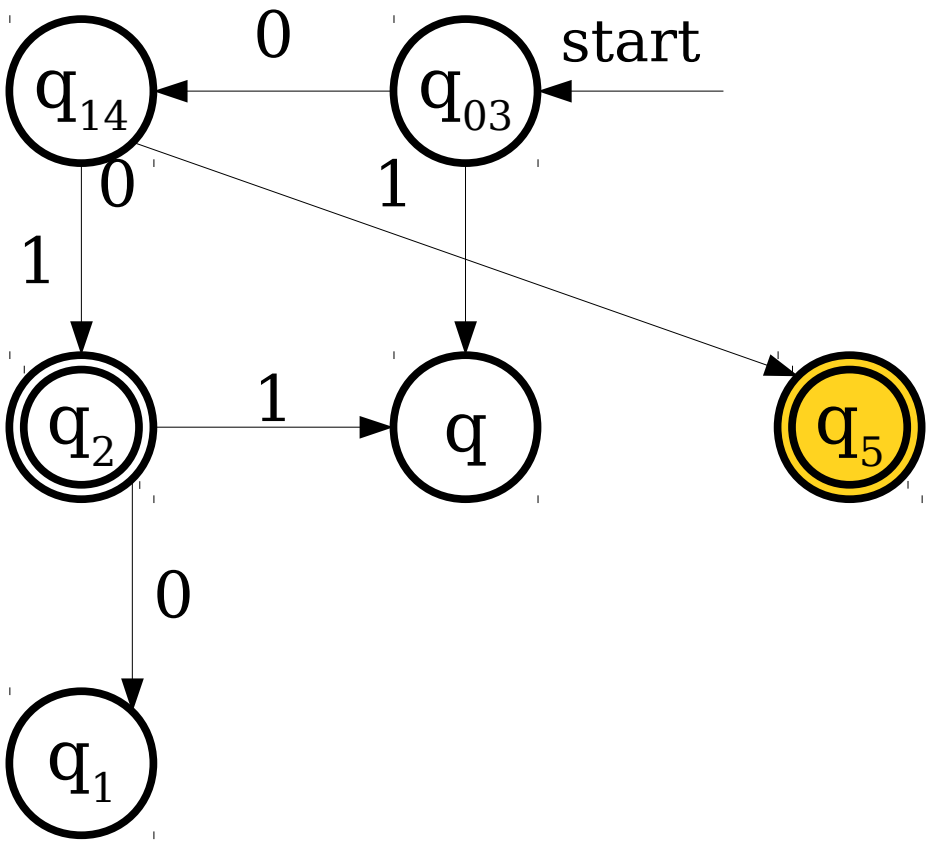

Simulating an NFA with a DFA

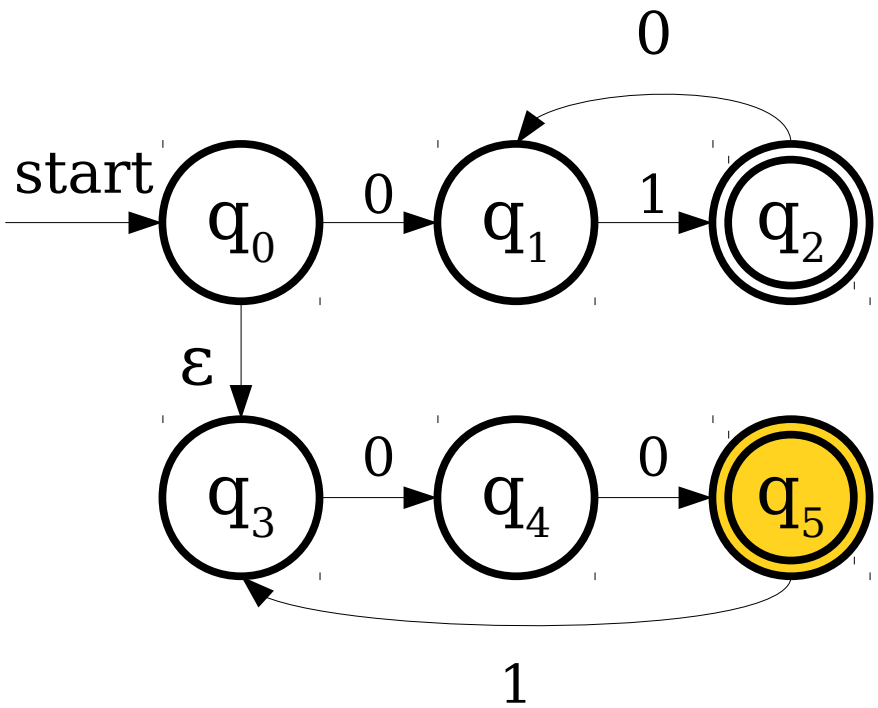

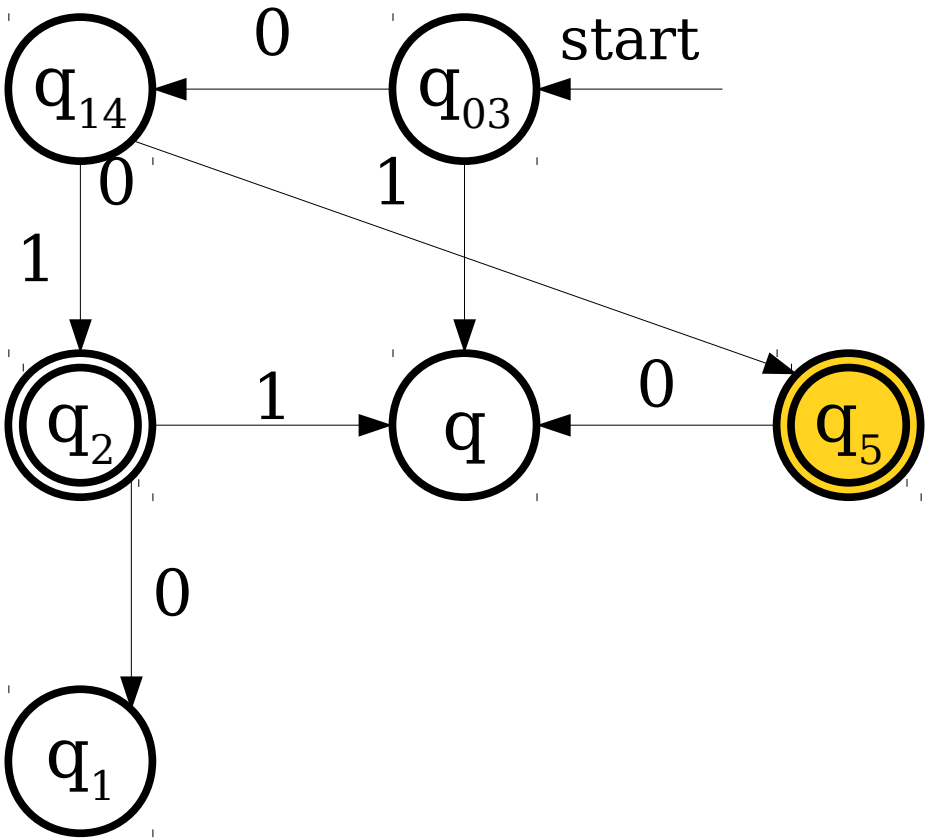

Simulating an NFA with a DFA

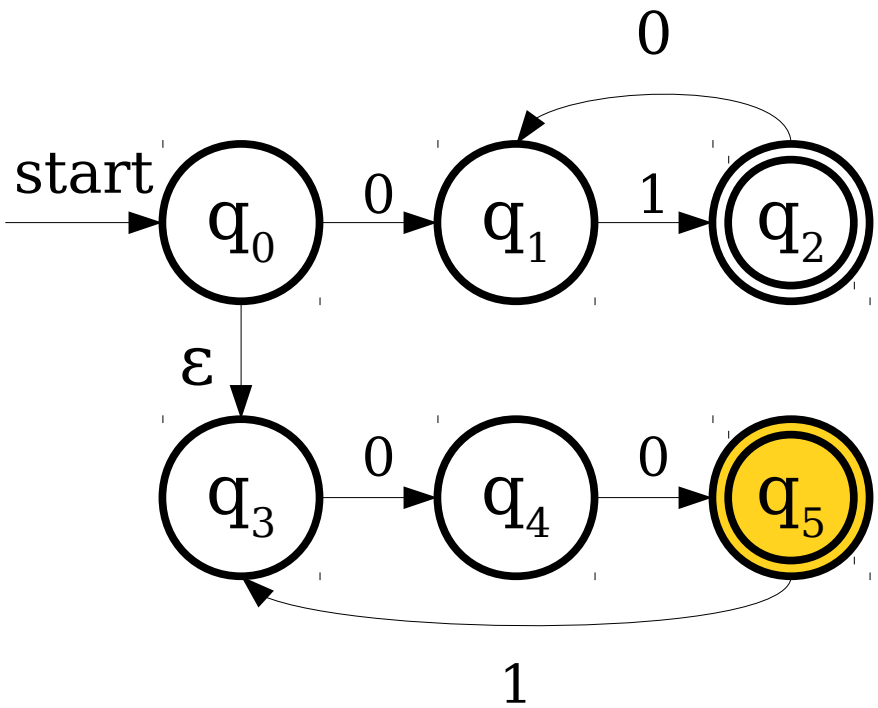

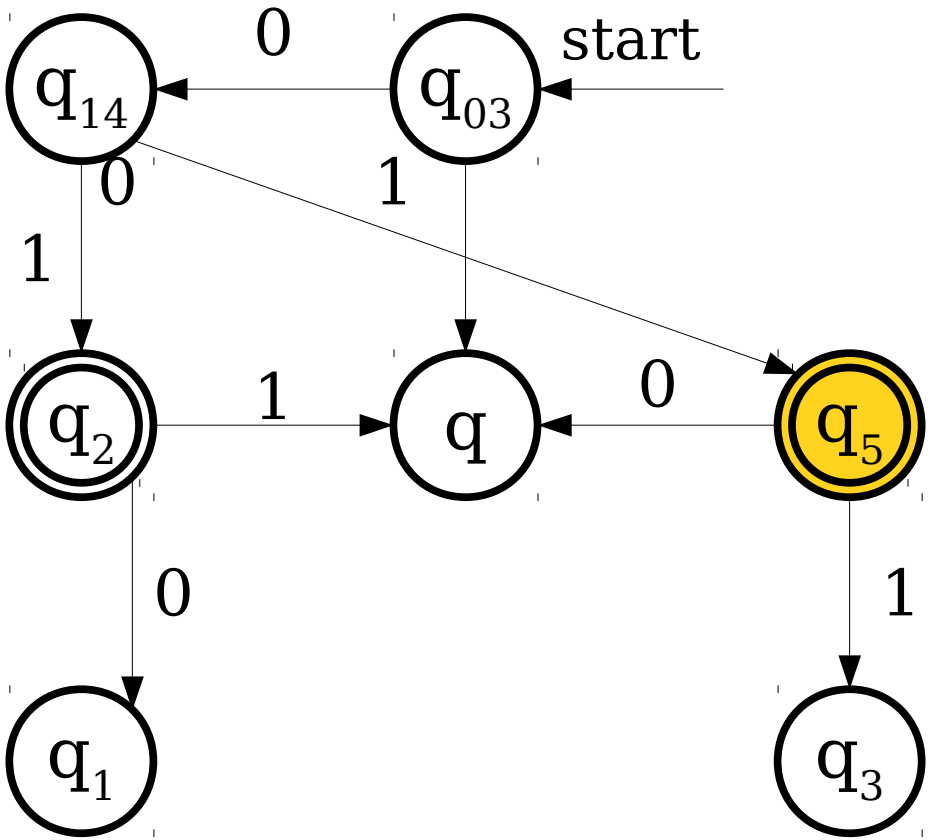

Simulating an NFA with a DFA

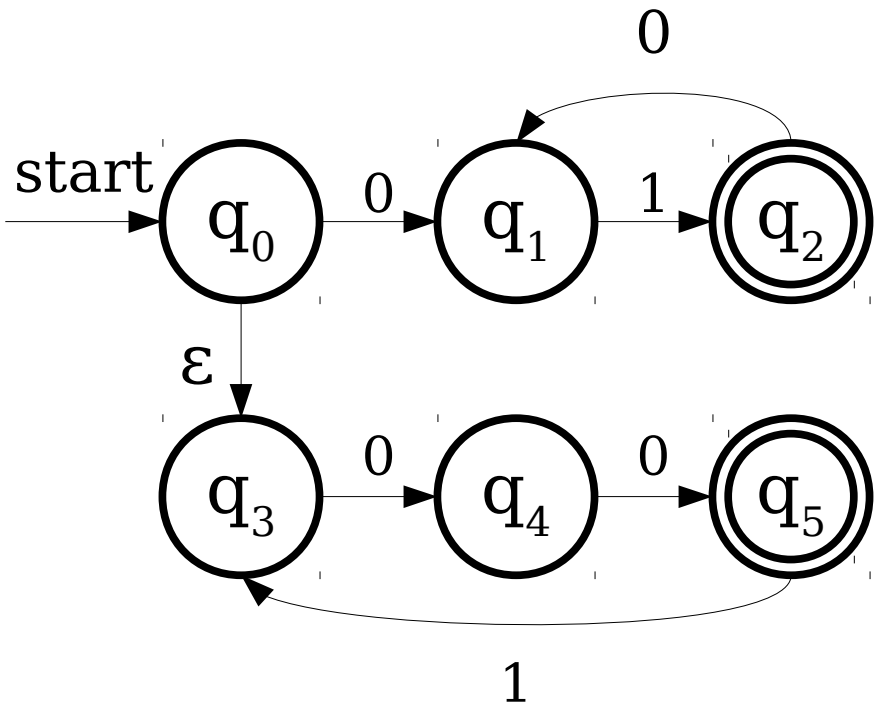

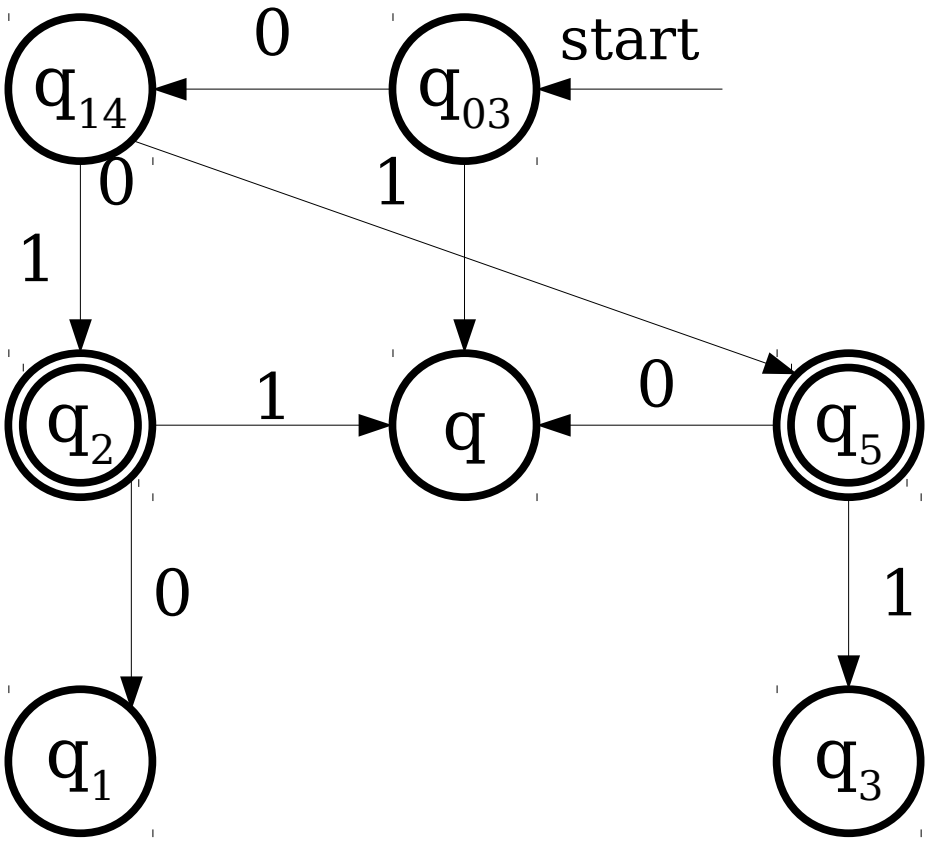

Simulating an NFA with a DFA

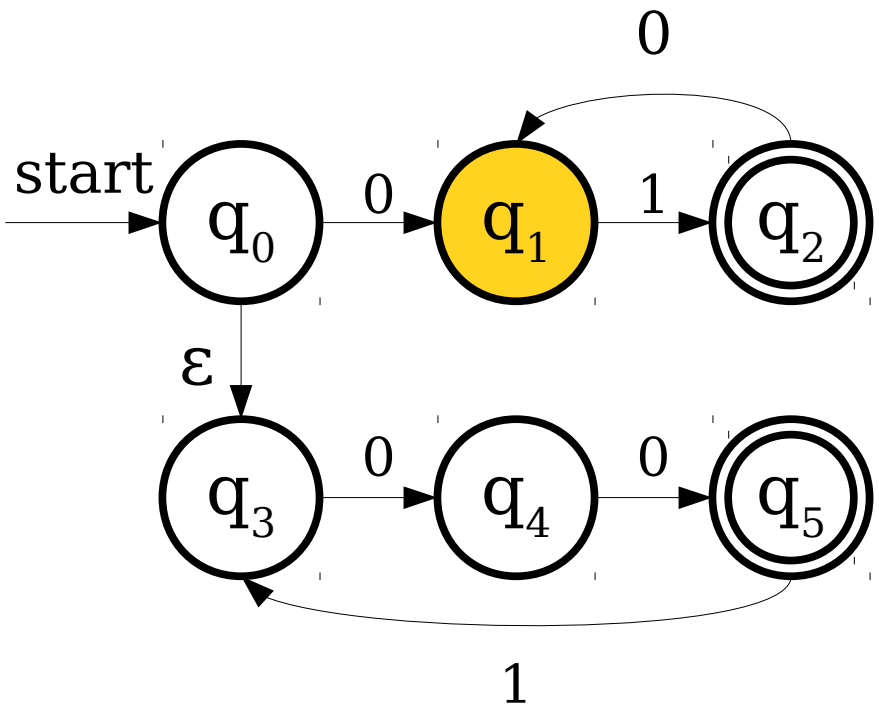

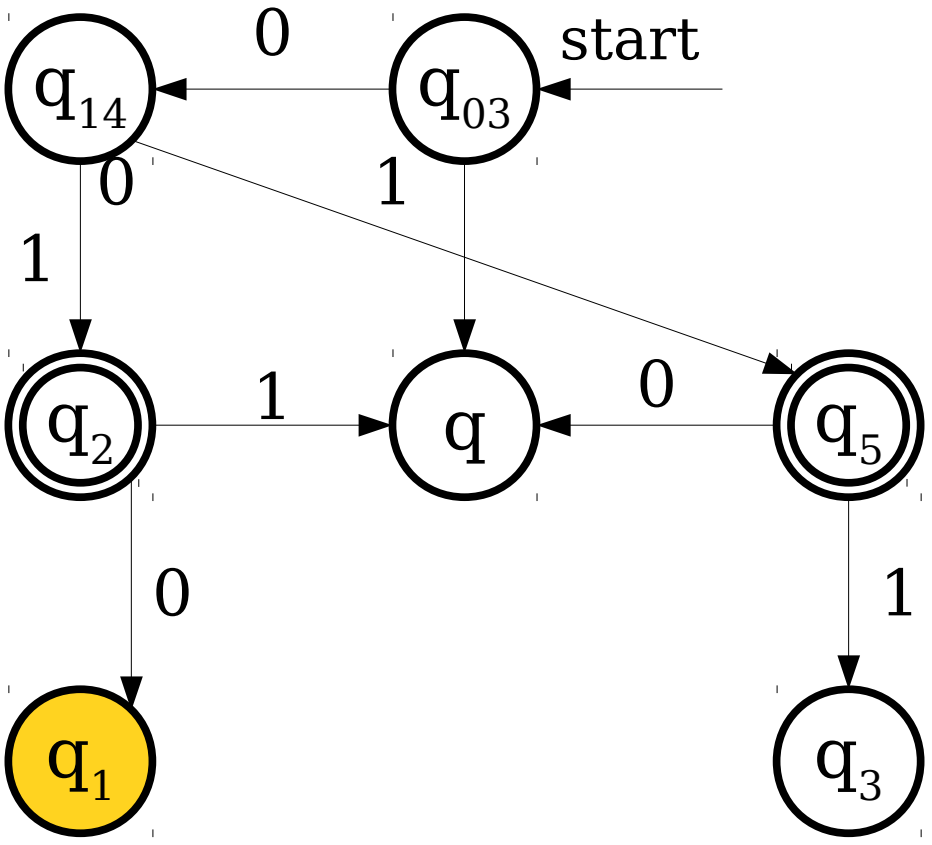

Simulating an NFA with a DFA

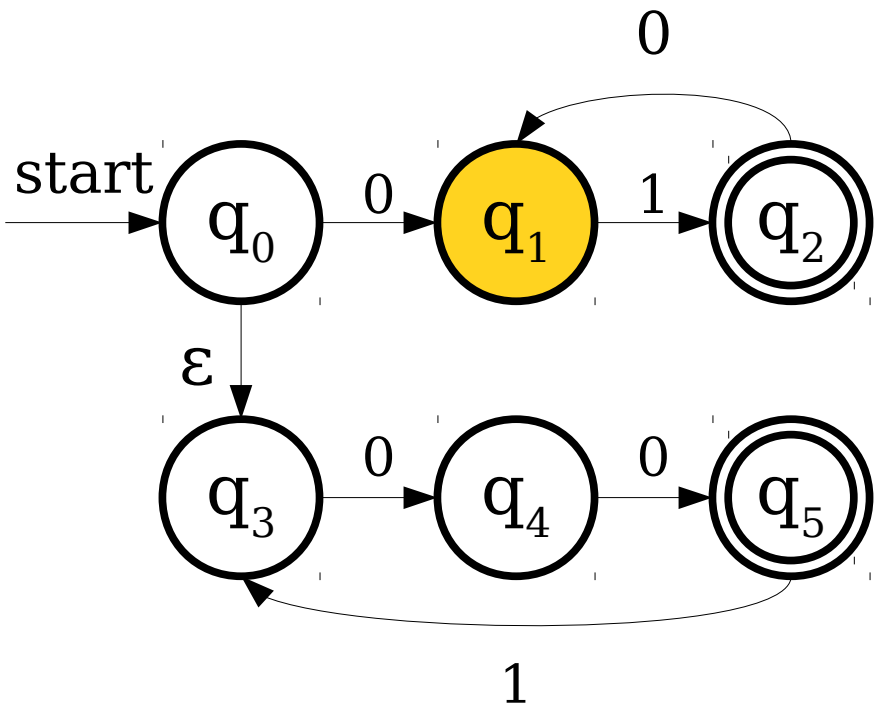

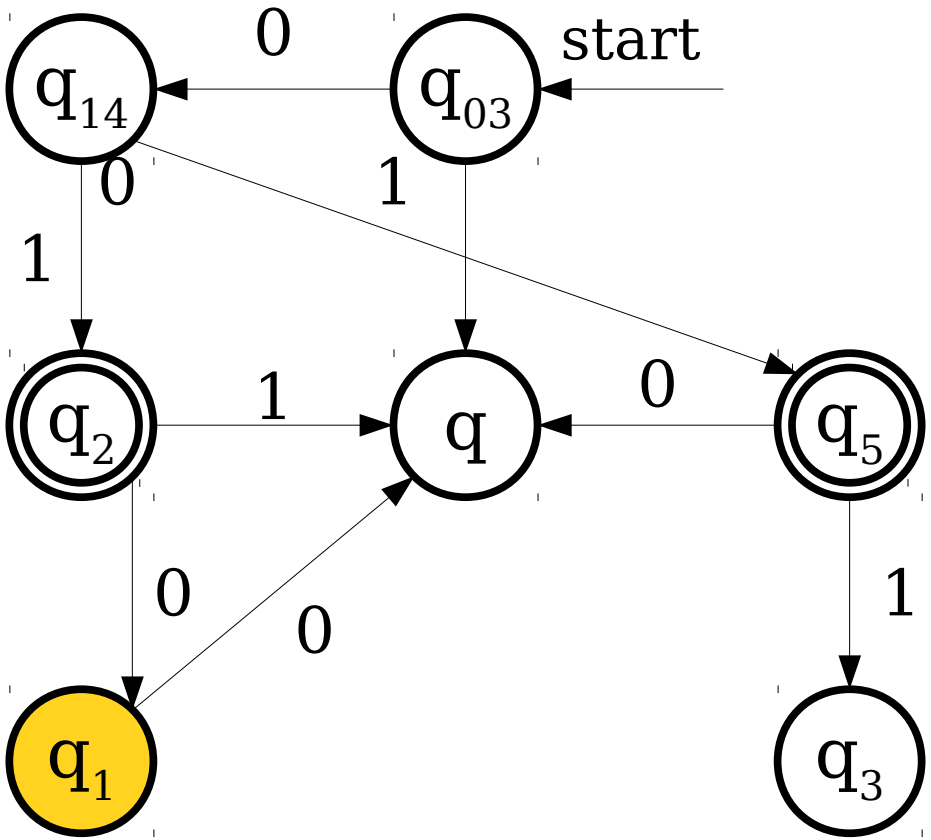

Simulating an NFA with a DFA

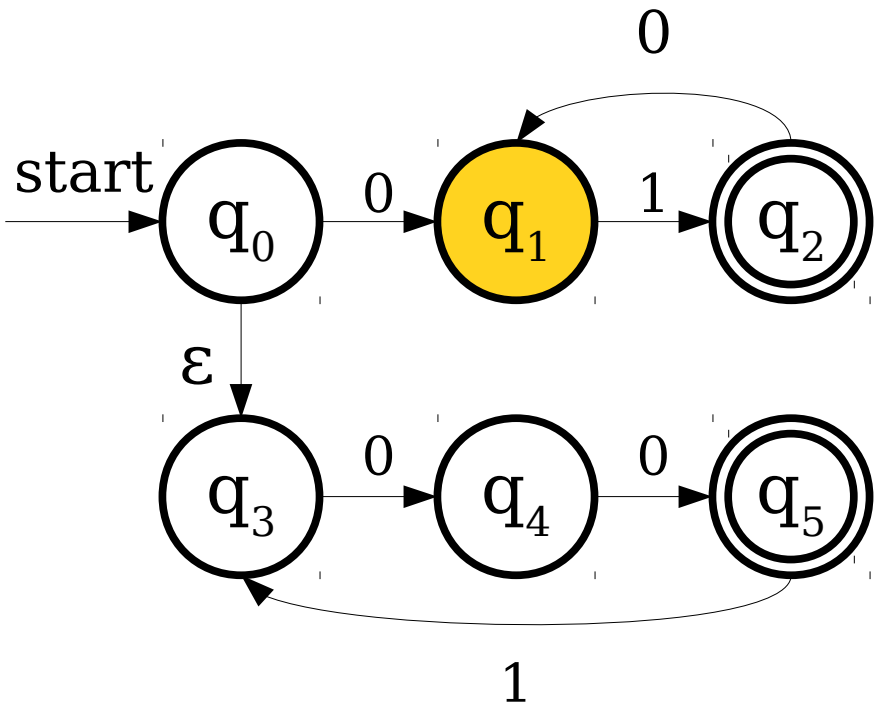

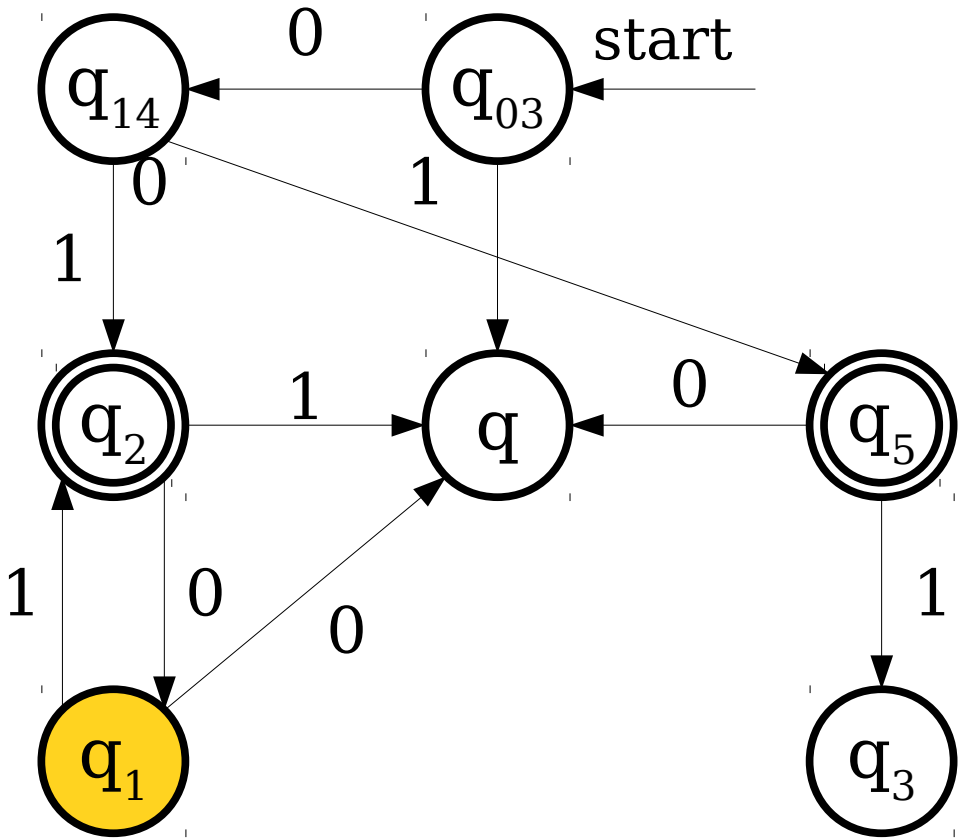

Simulating an NFA with a DFA

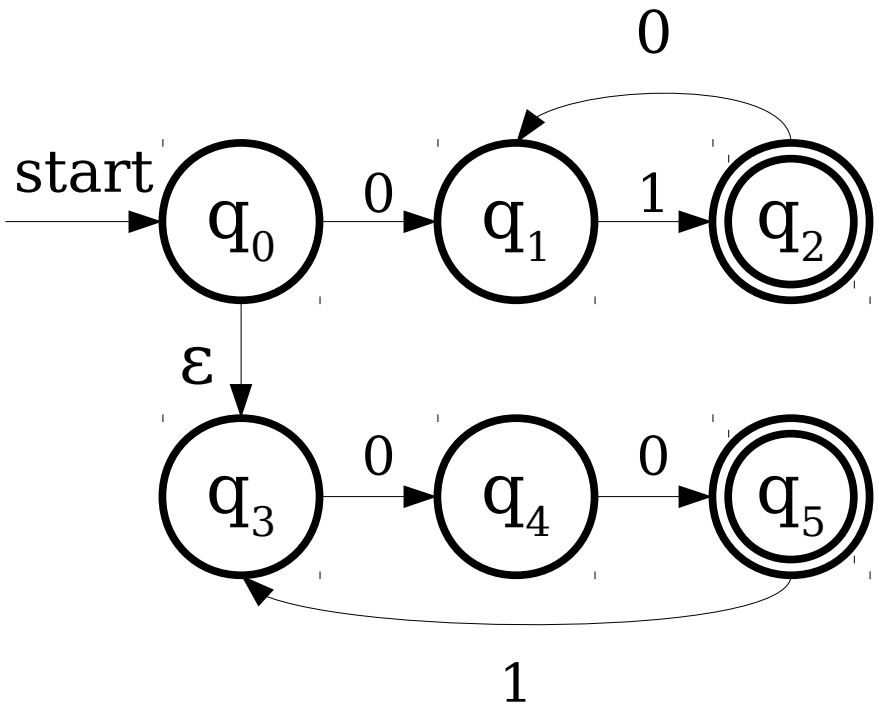

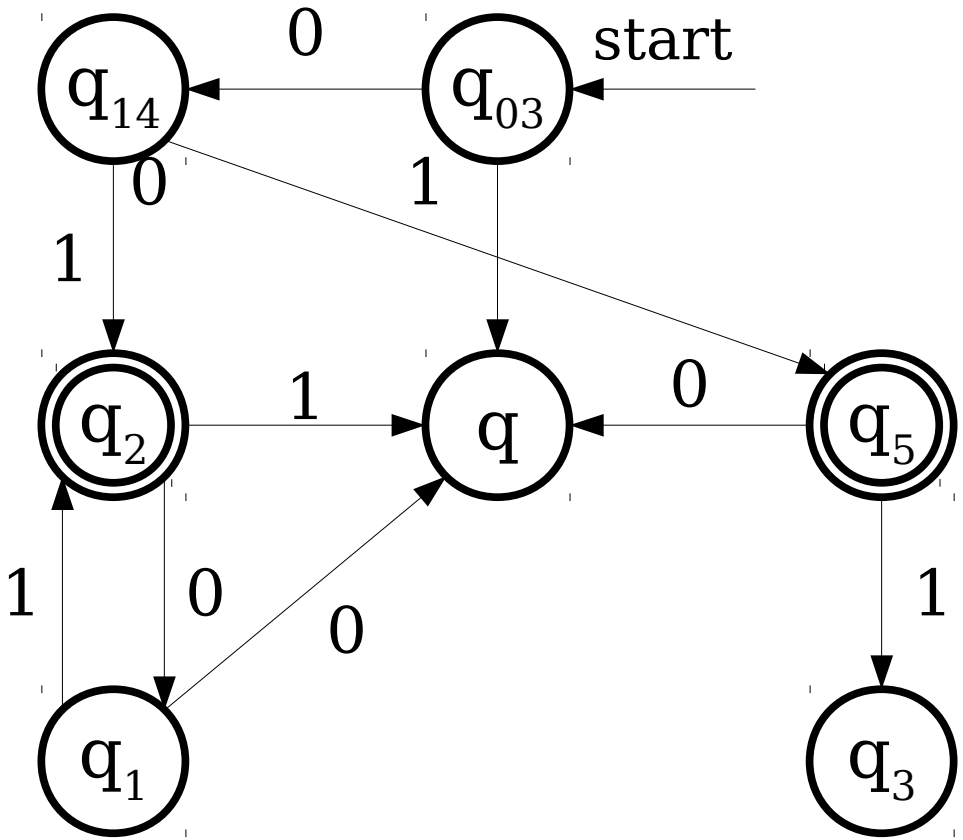

Simulating an NFA with a DFA

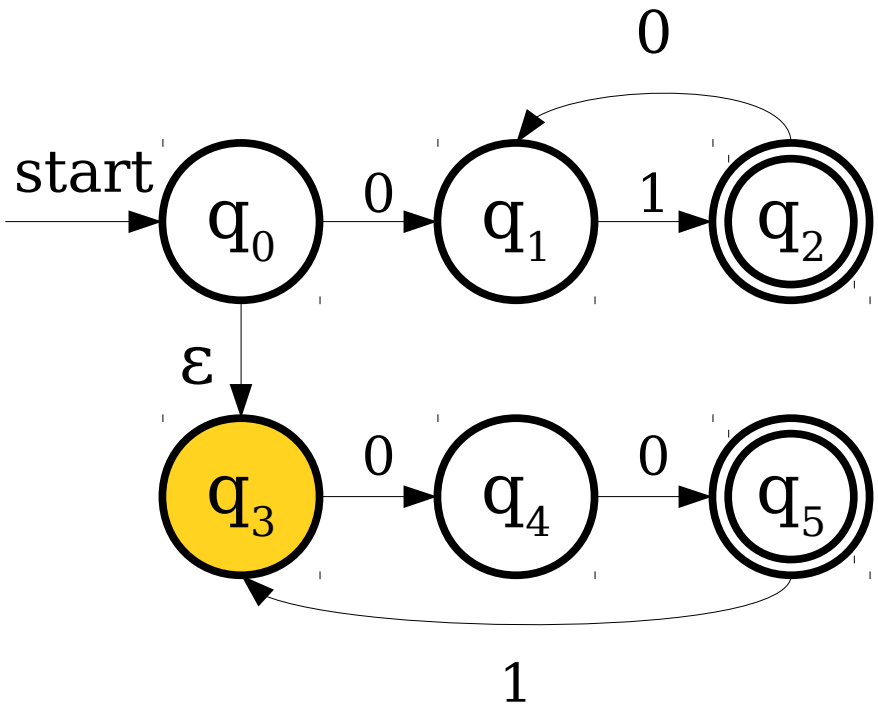

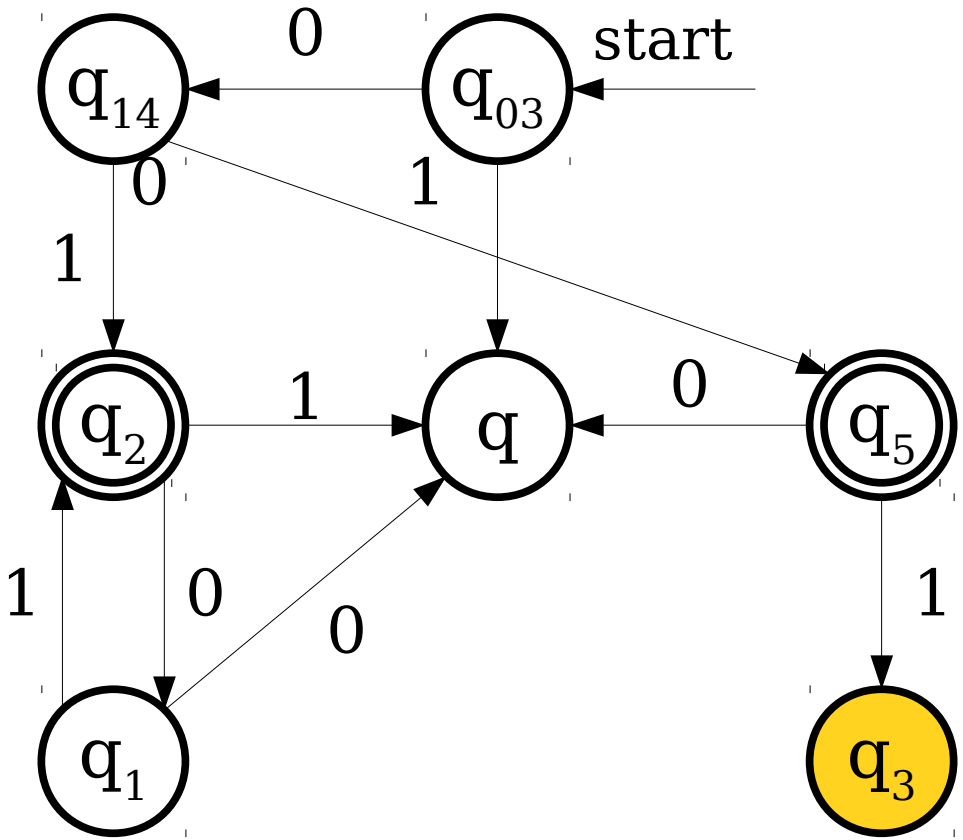

Simulating an NFA with a DFA

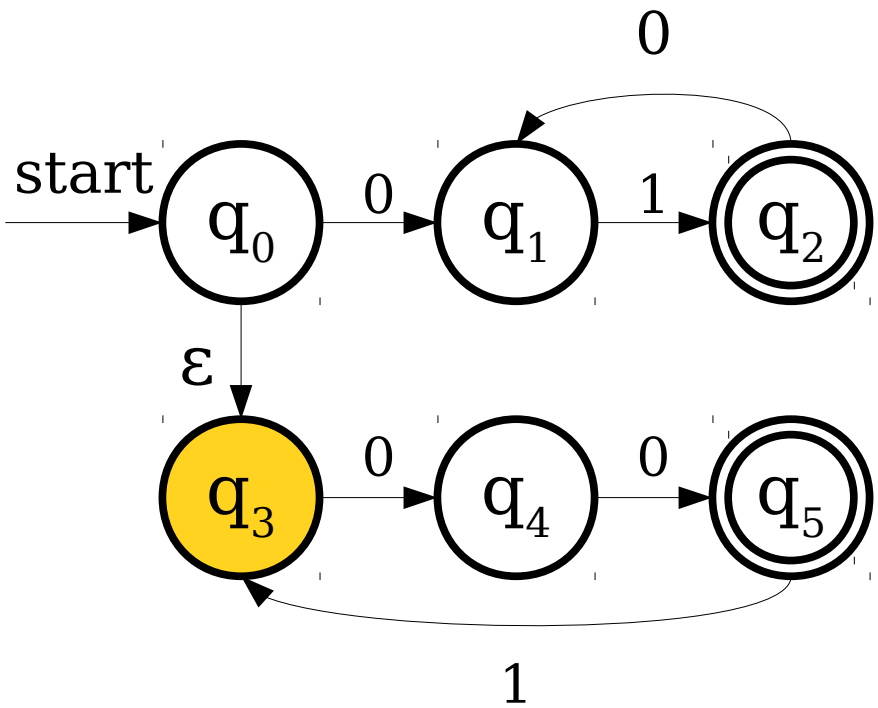

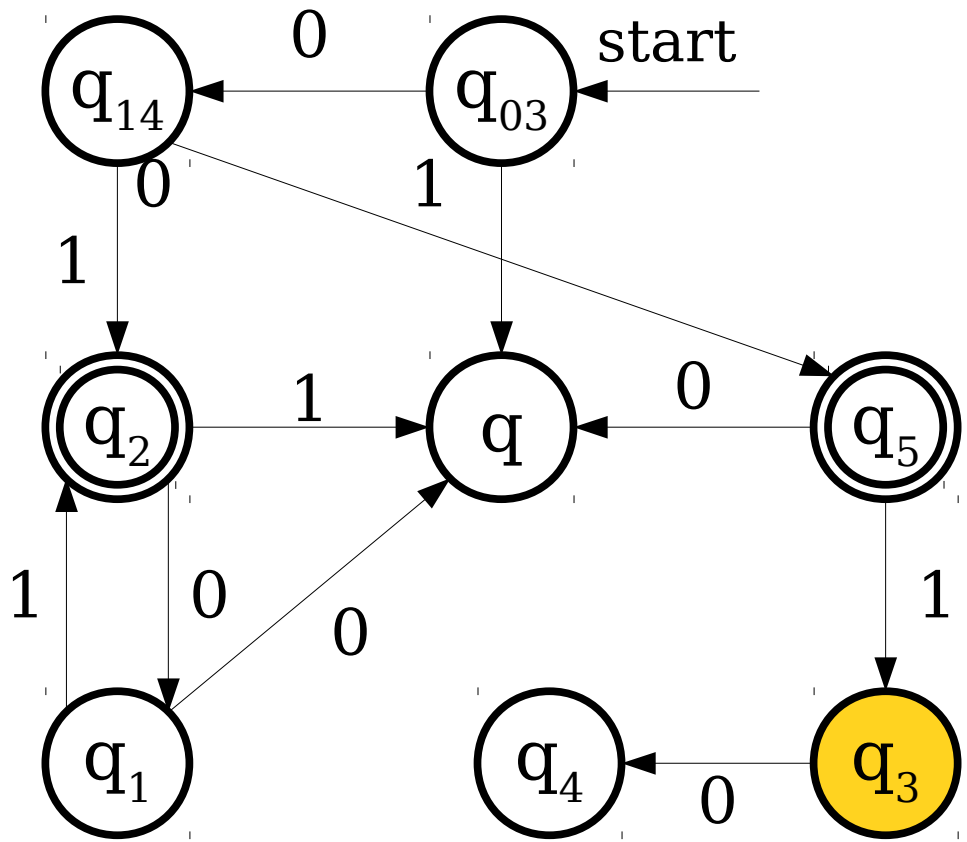

Simulating an NFA with a DFA

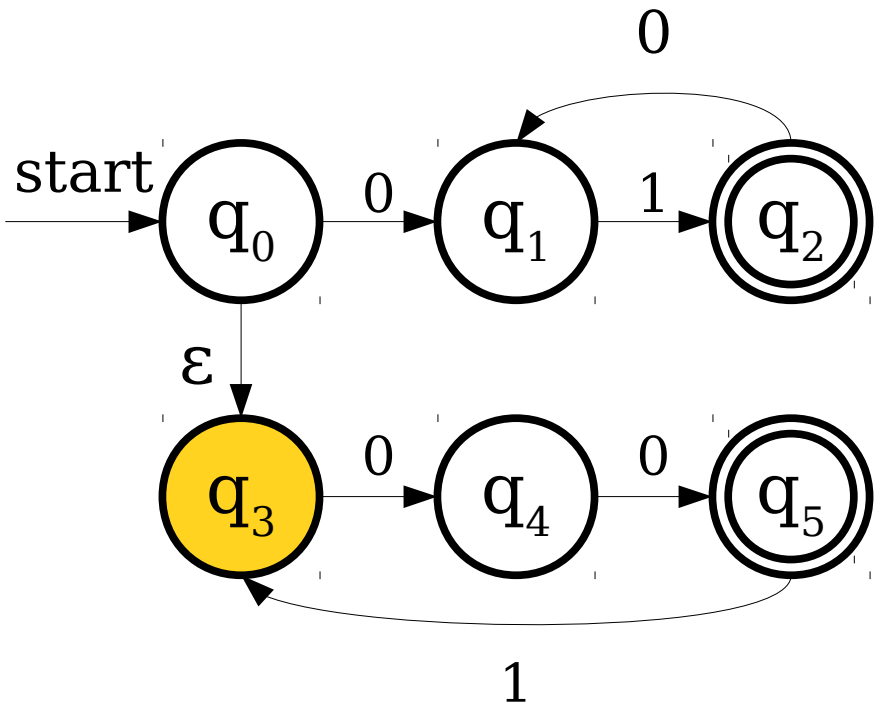

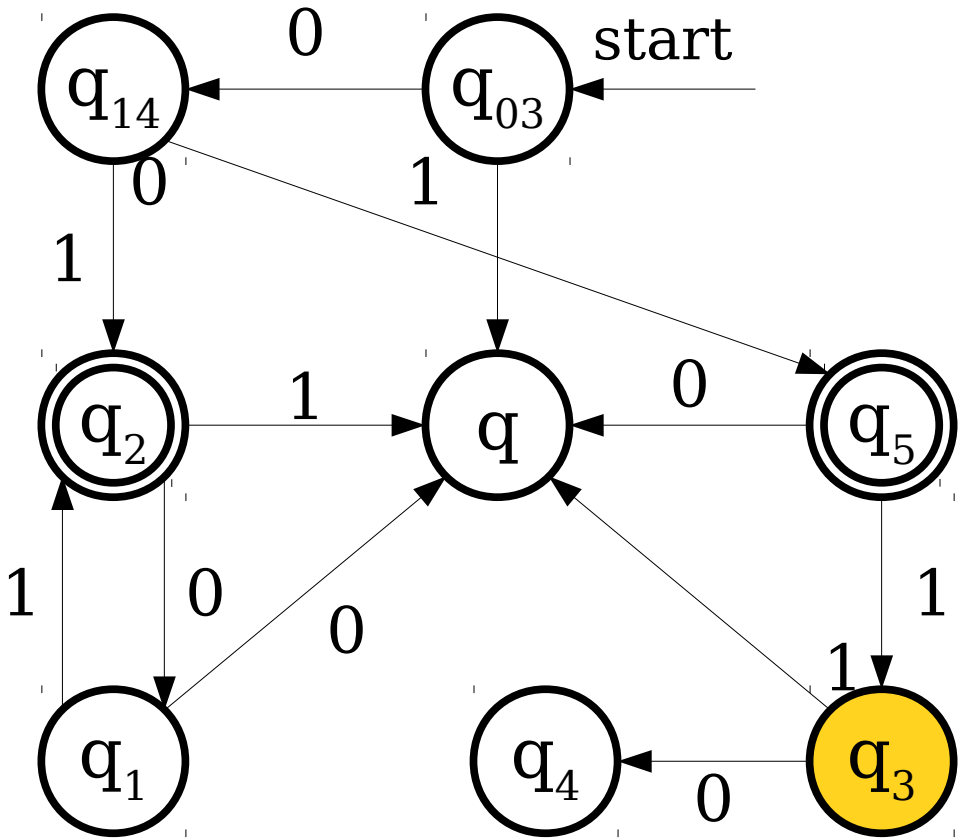

Simulating an NFA with a DFA

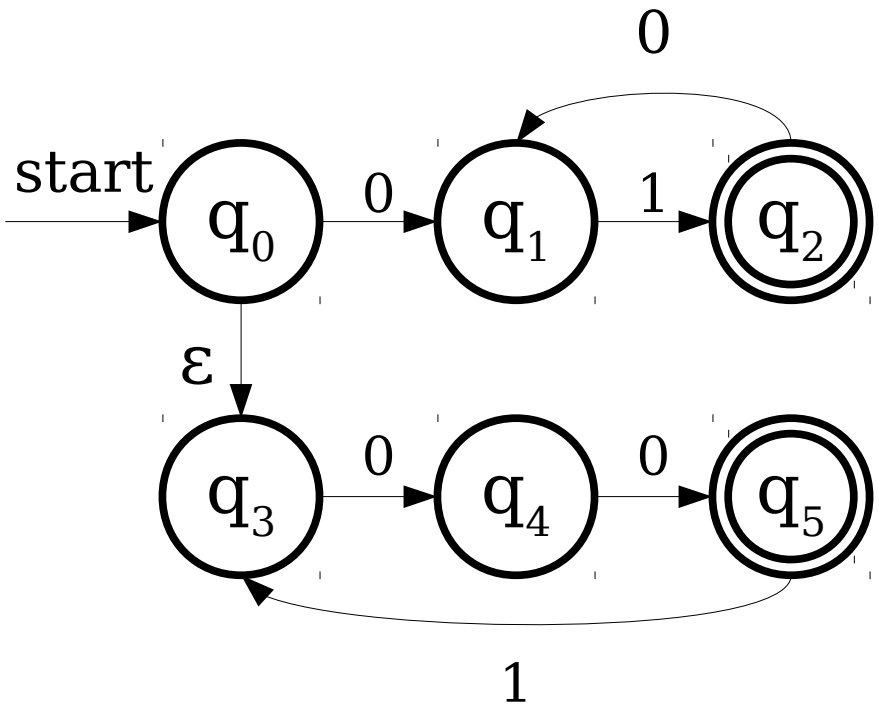

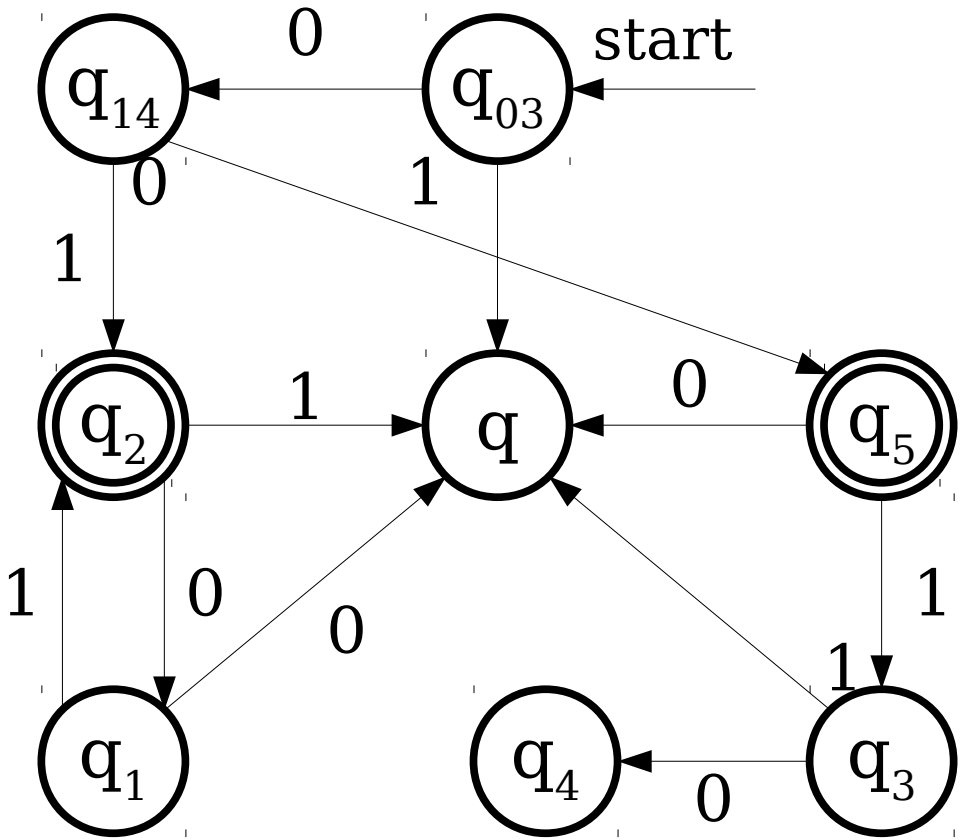

Simulating an NFA with a DFA

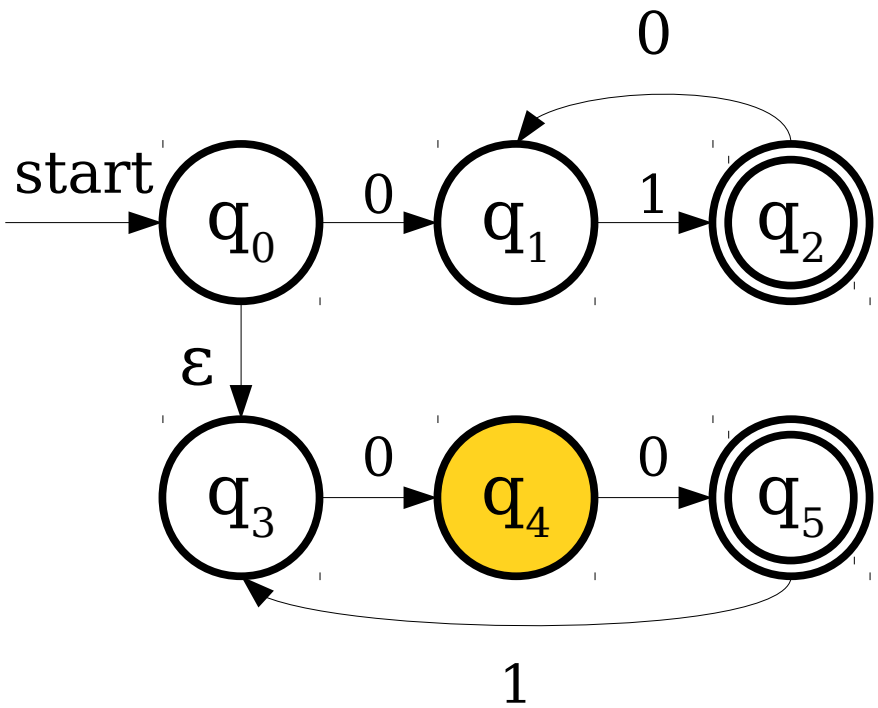

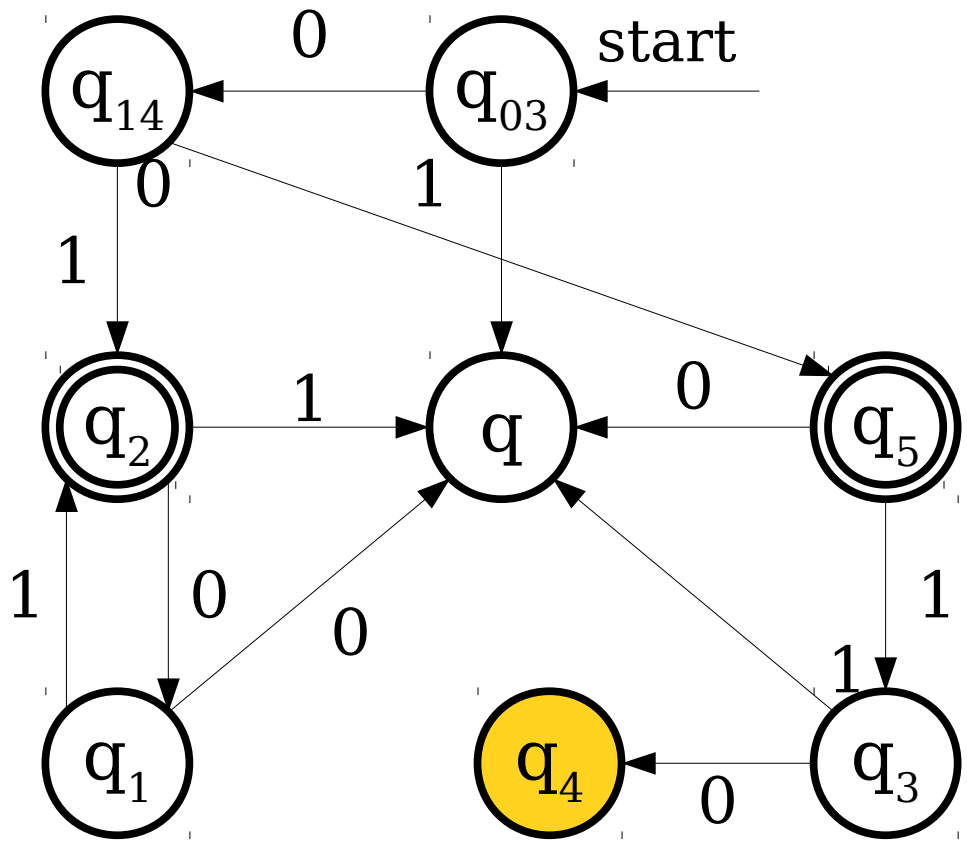

Simulating an NFA with a DFA

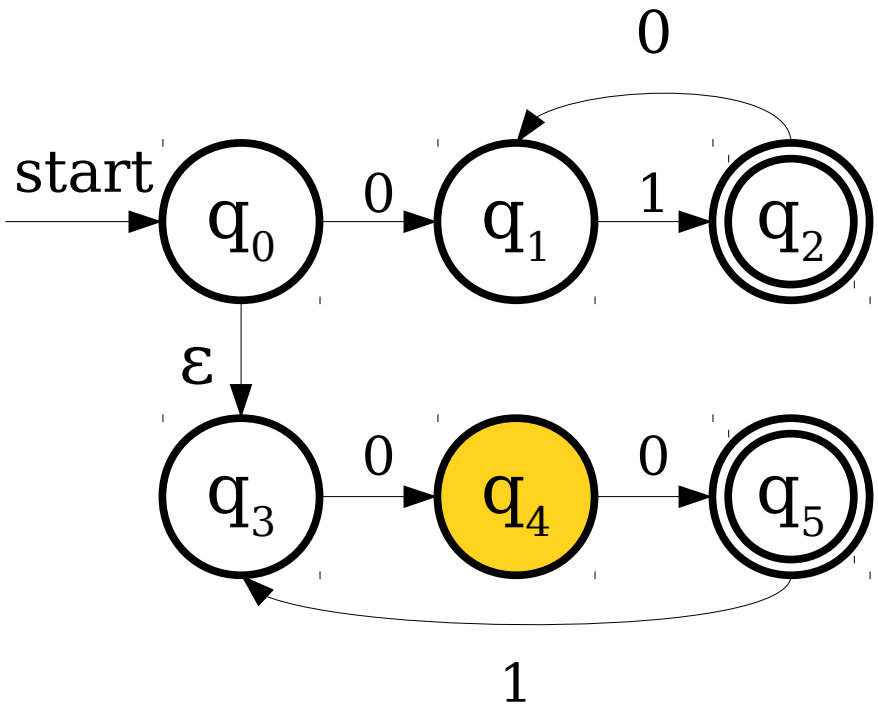

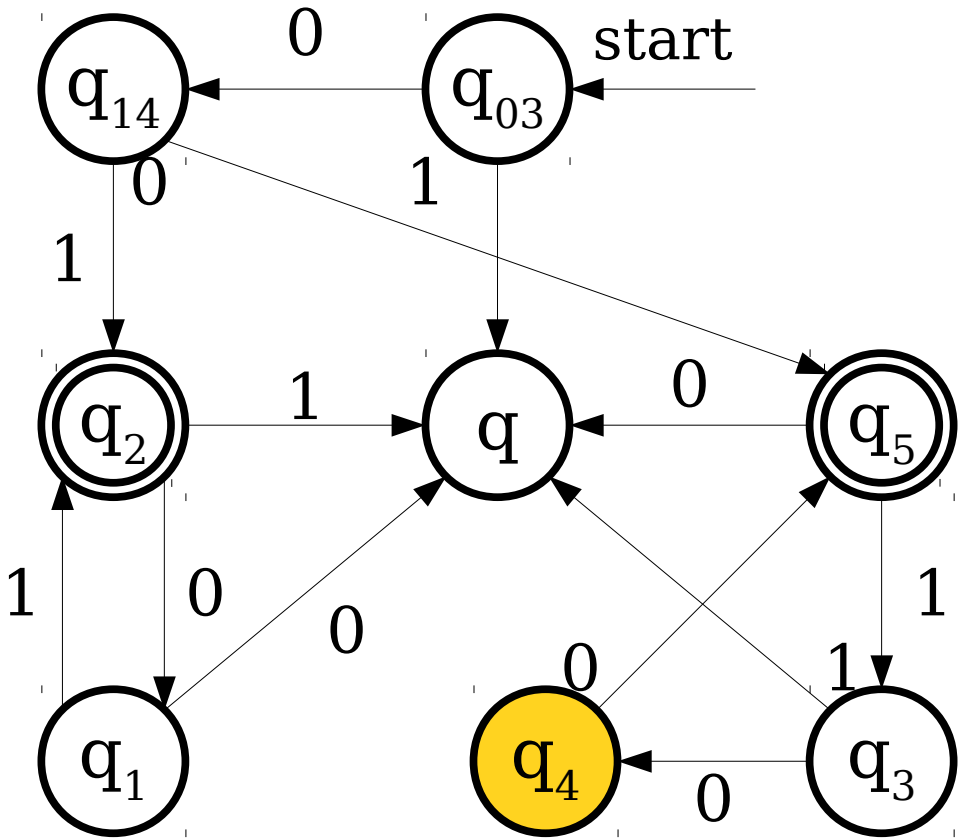

Simulating an NFA with a DFA

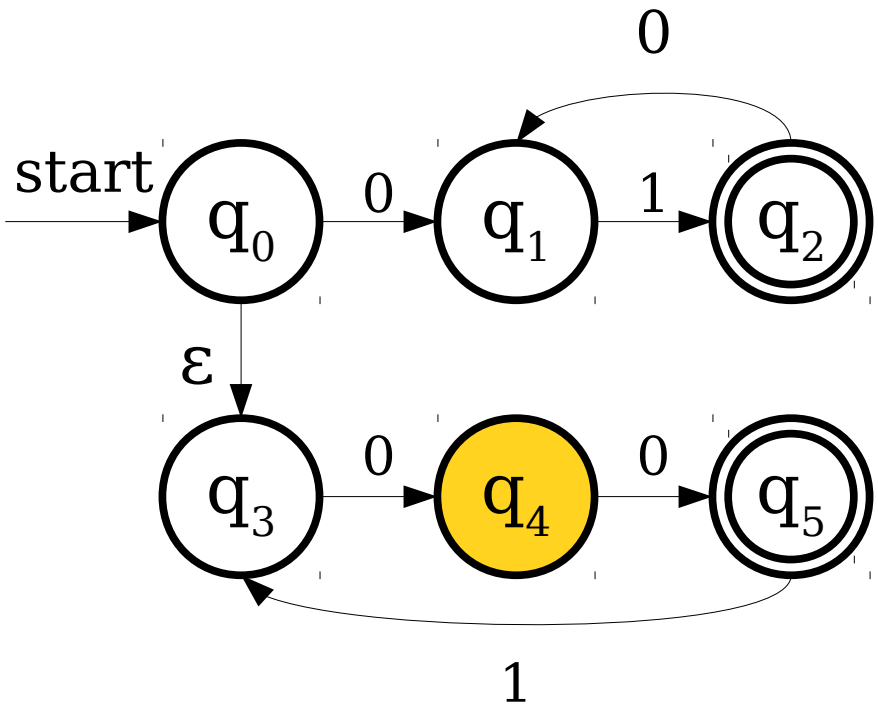

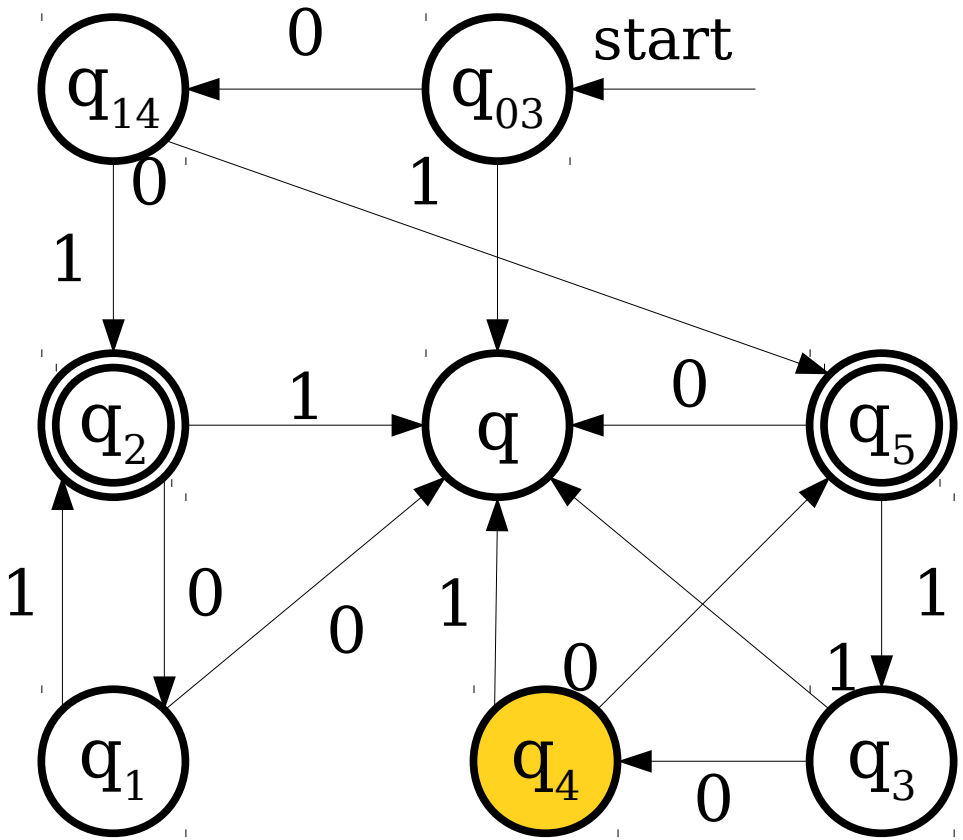

Simulating an NFA with a DFA

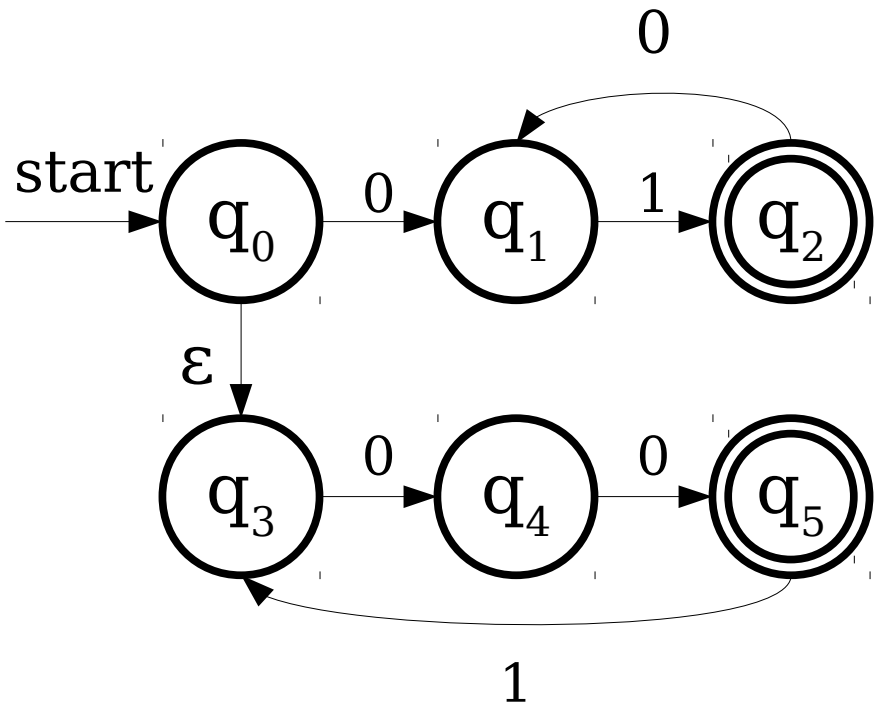

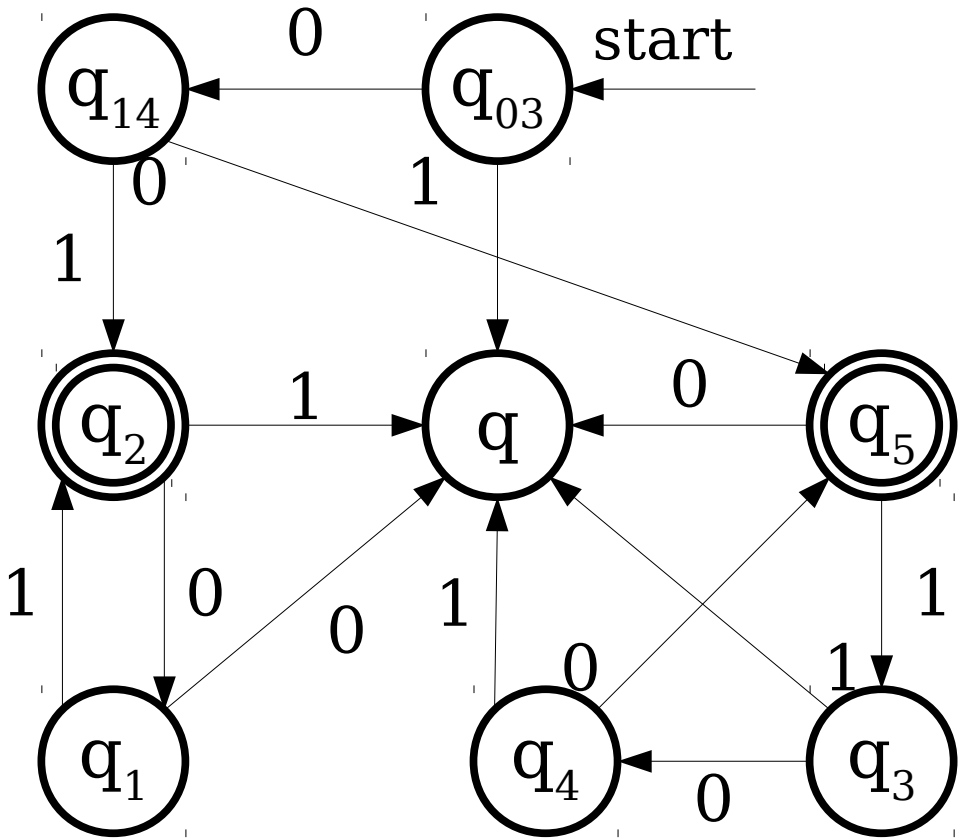

Simulating an NFA with a DFA

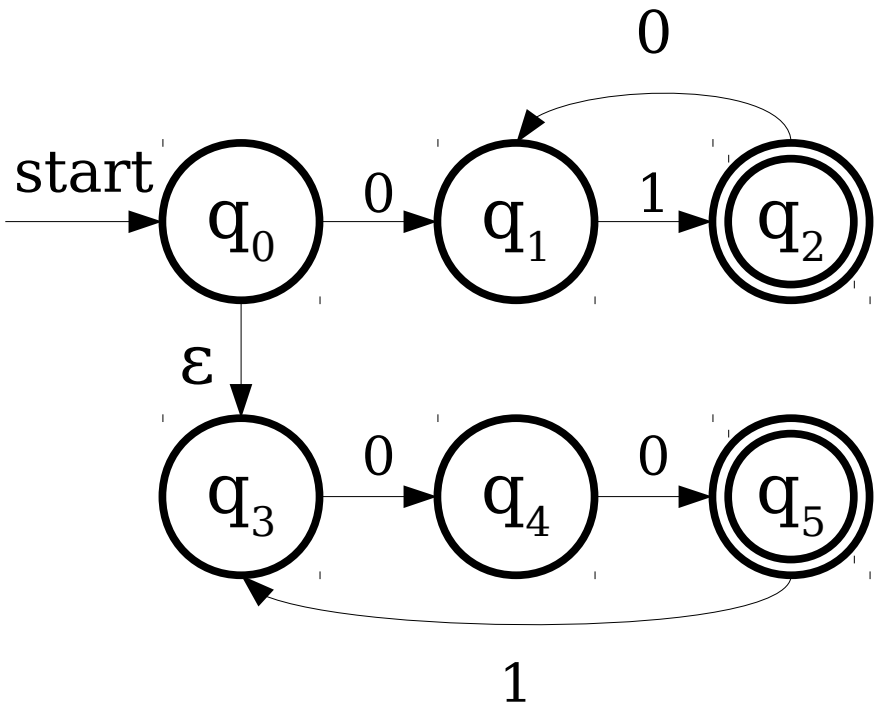

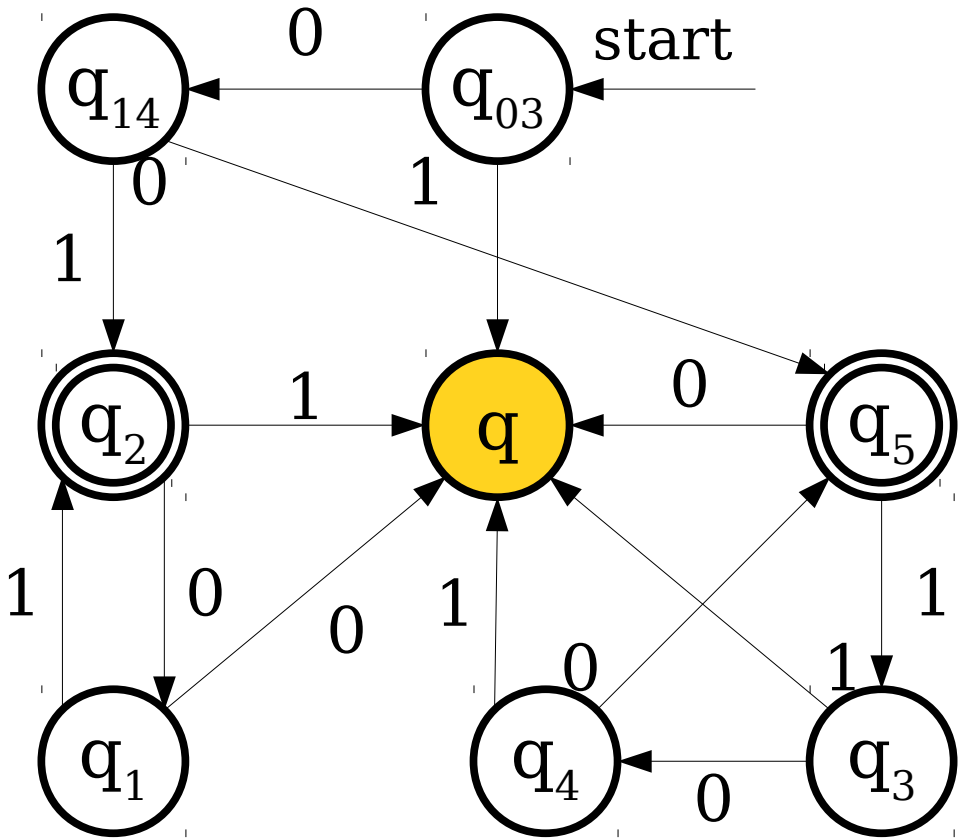

Simulating an NFA with a DFA

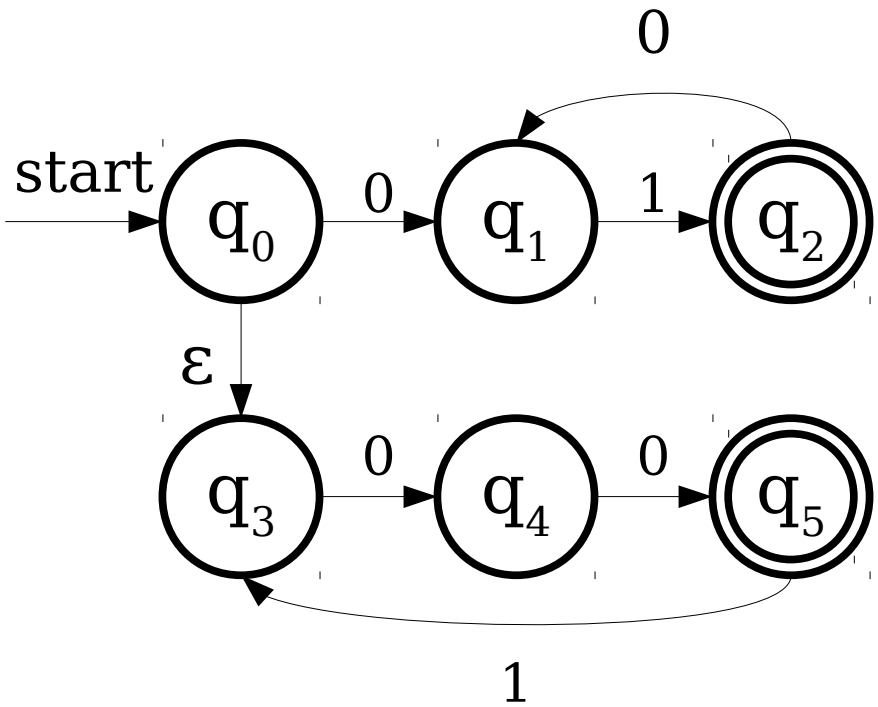

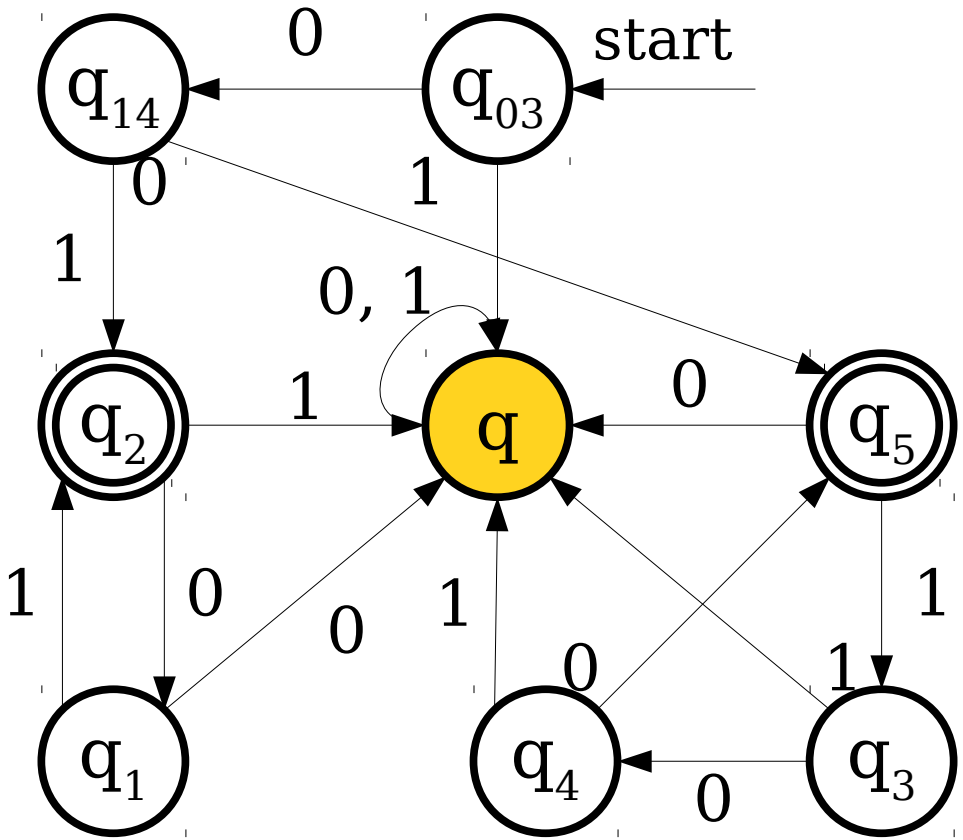

Simulating an NFA with a DFA

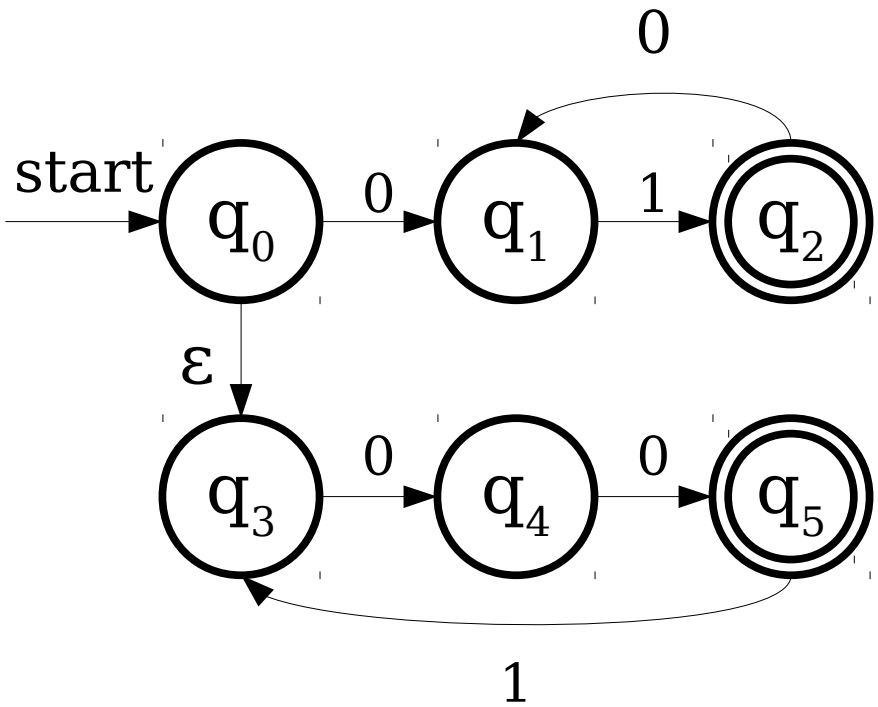

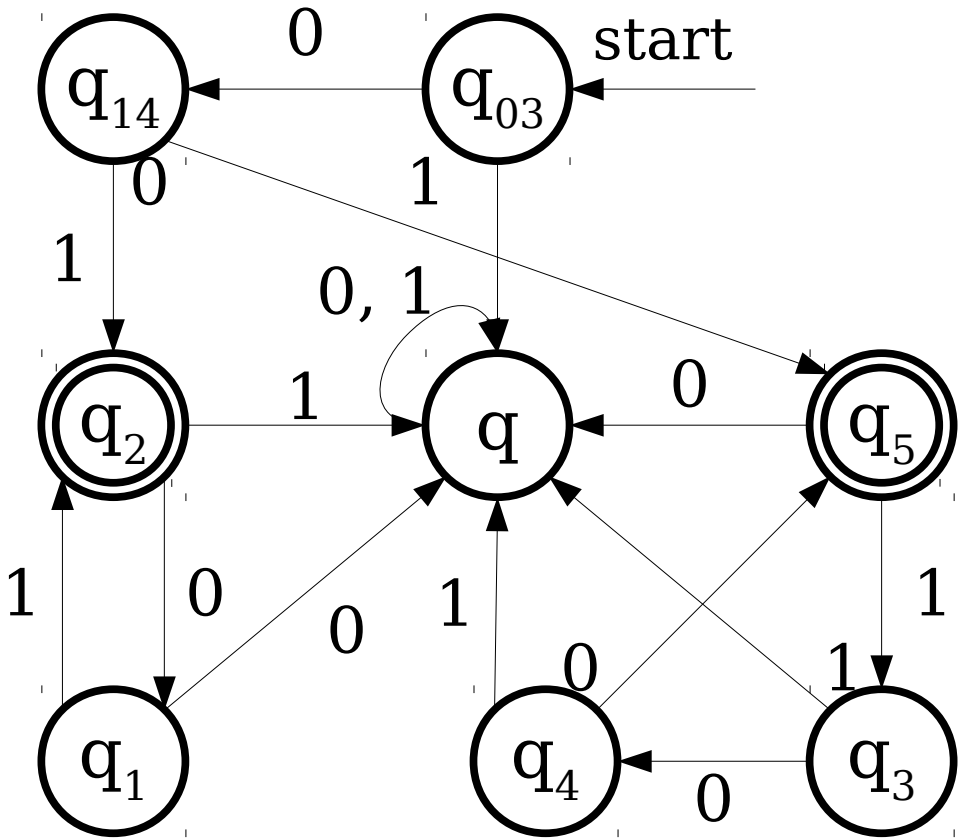

Simulating an NFA with a DFA

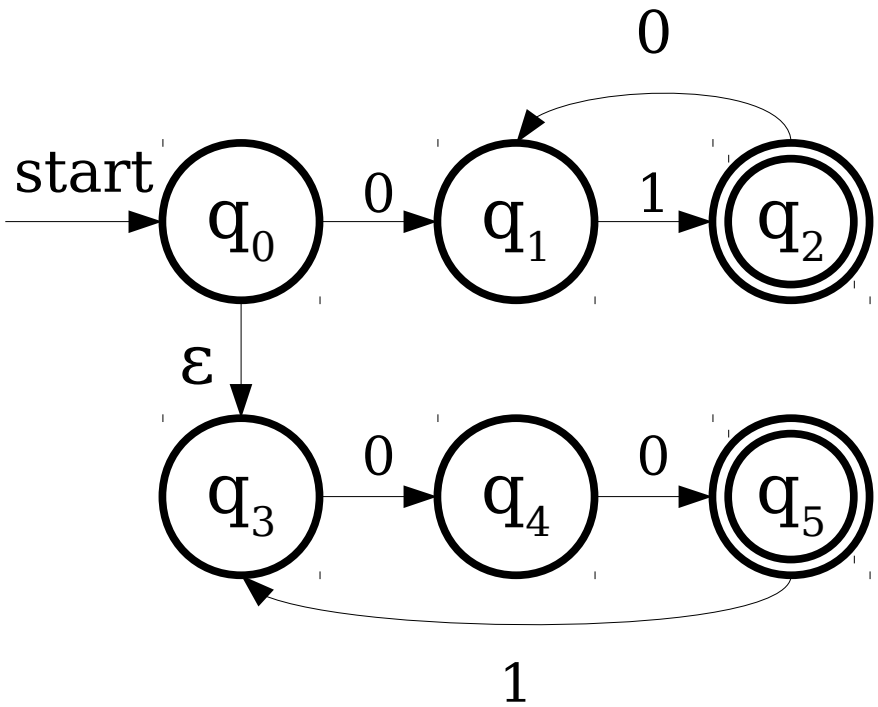

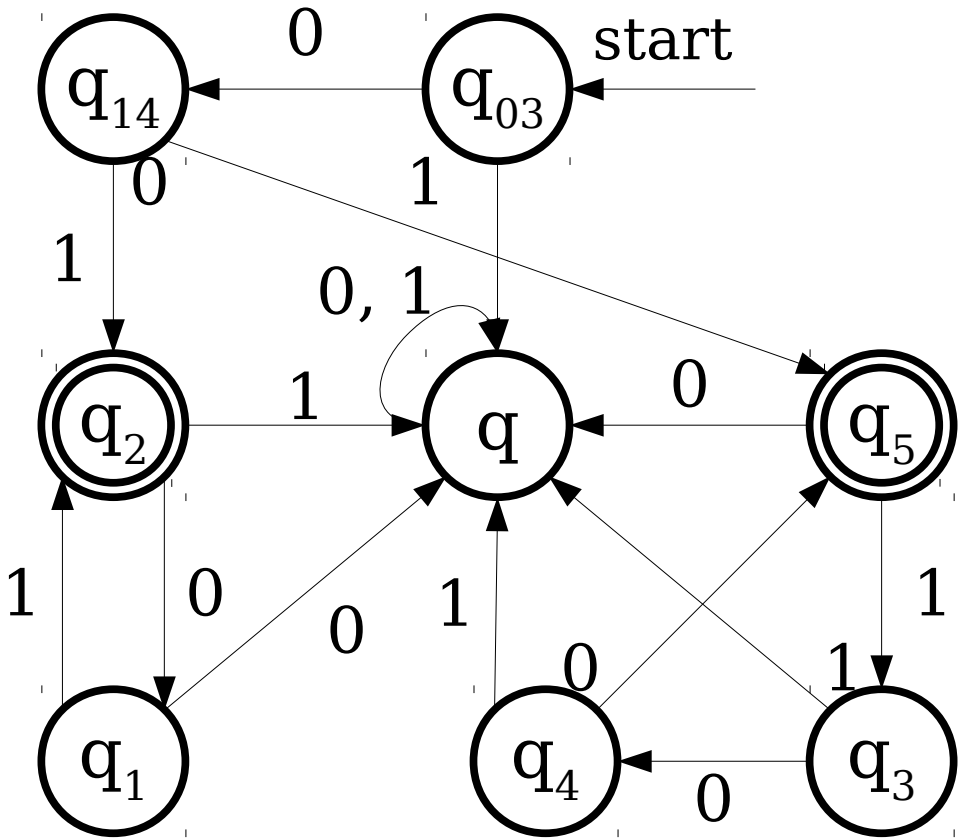

Simulating an NFA with a DFA

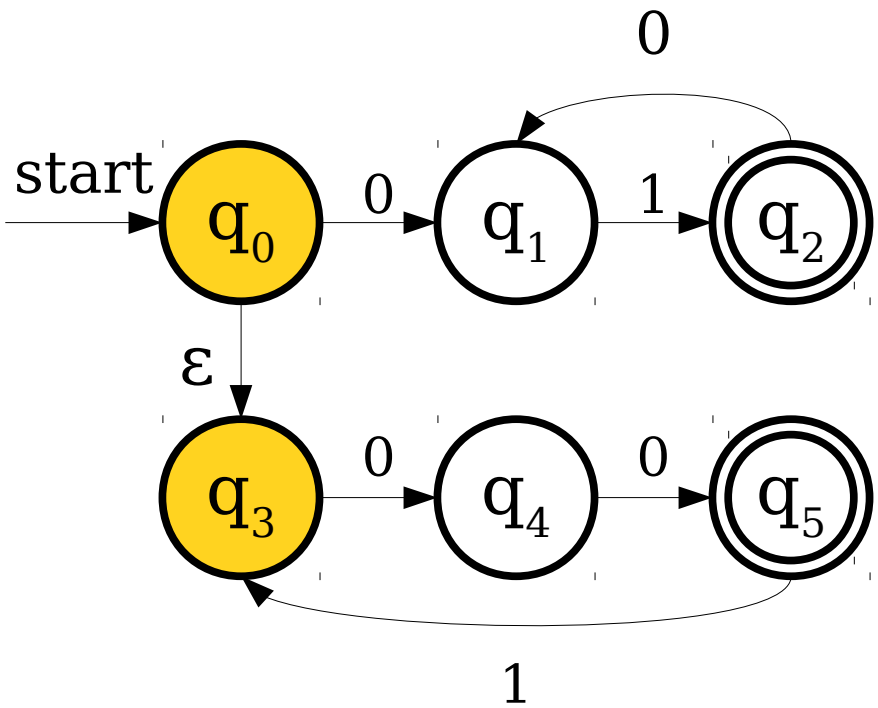

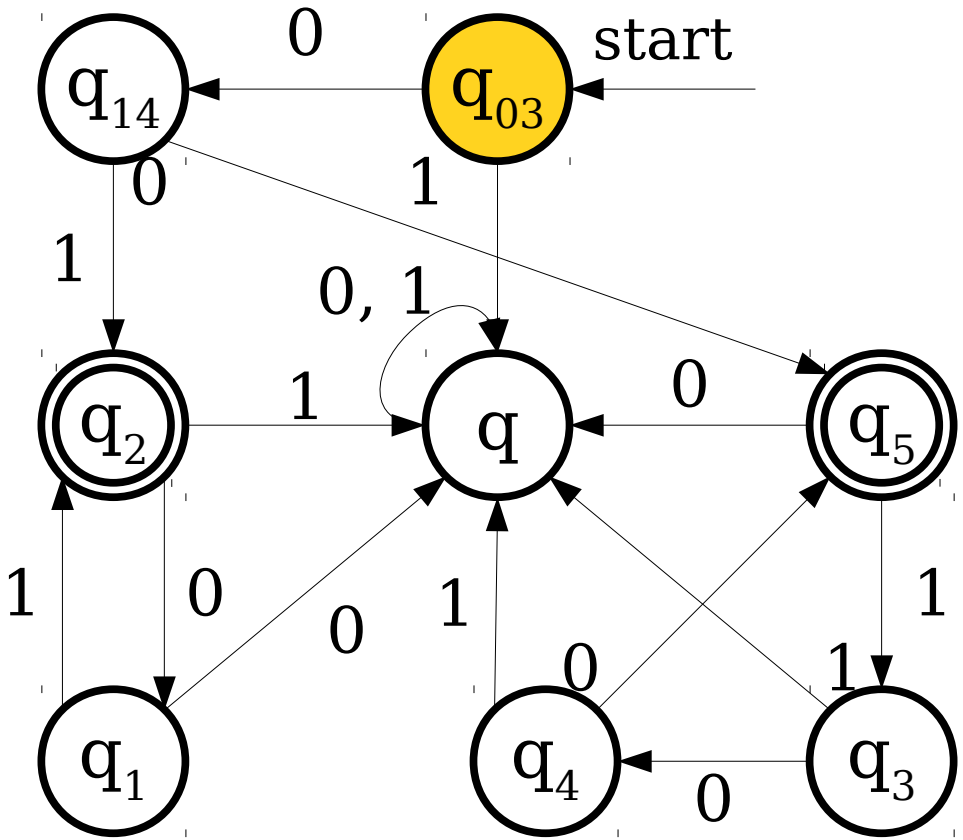

Simulating an NFA with a DFA

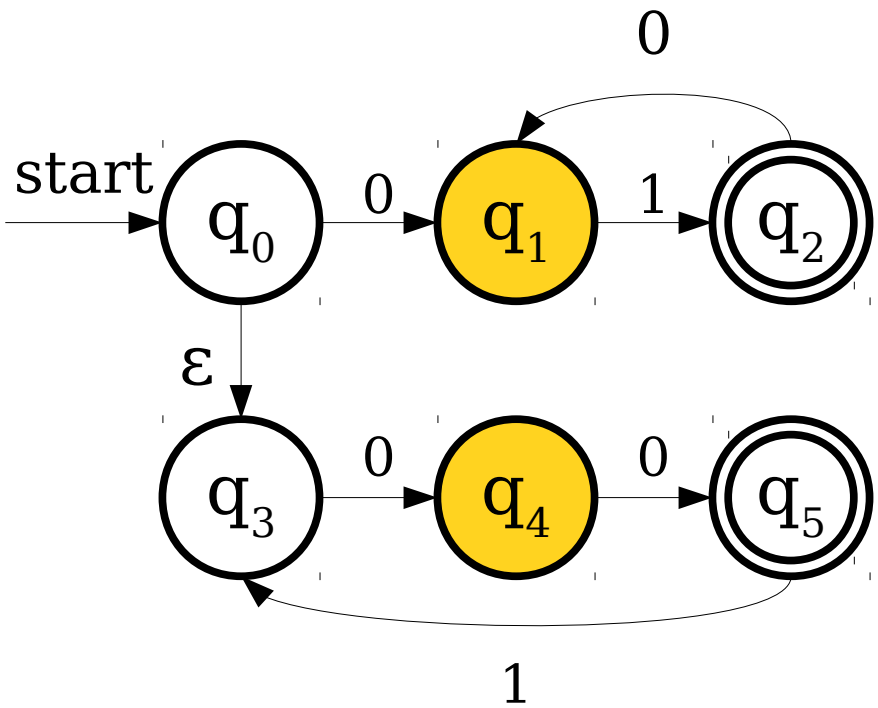

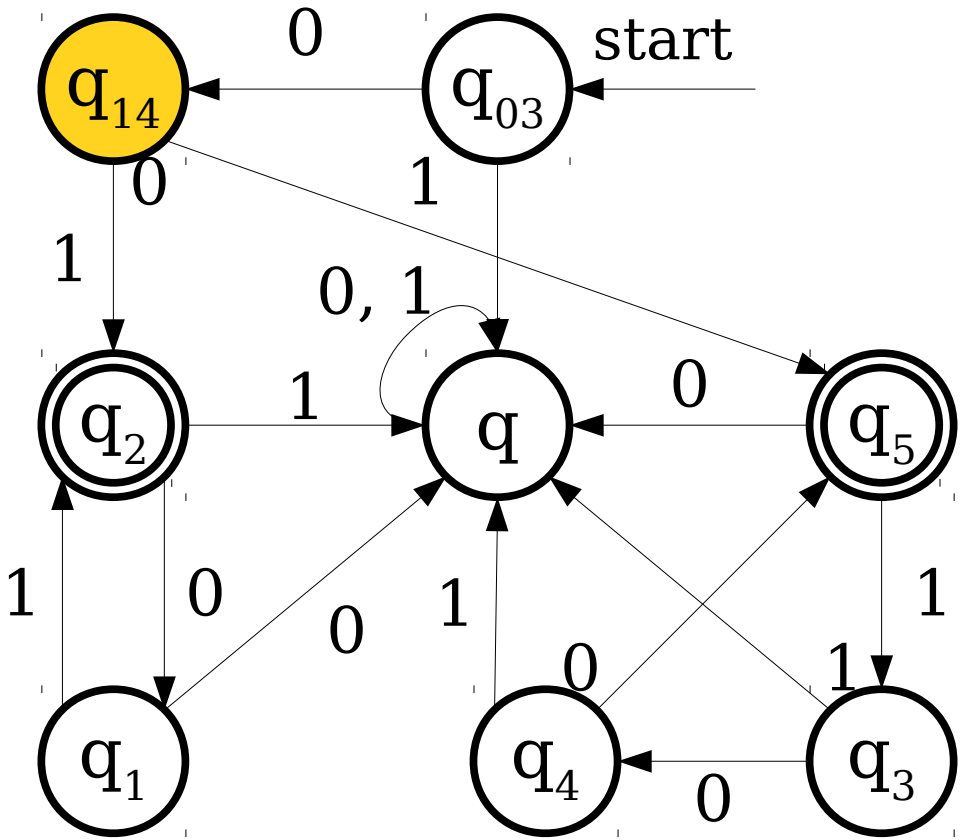

Simulating an NFA with a DFA

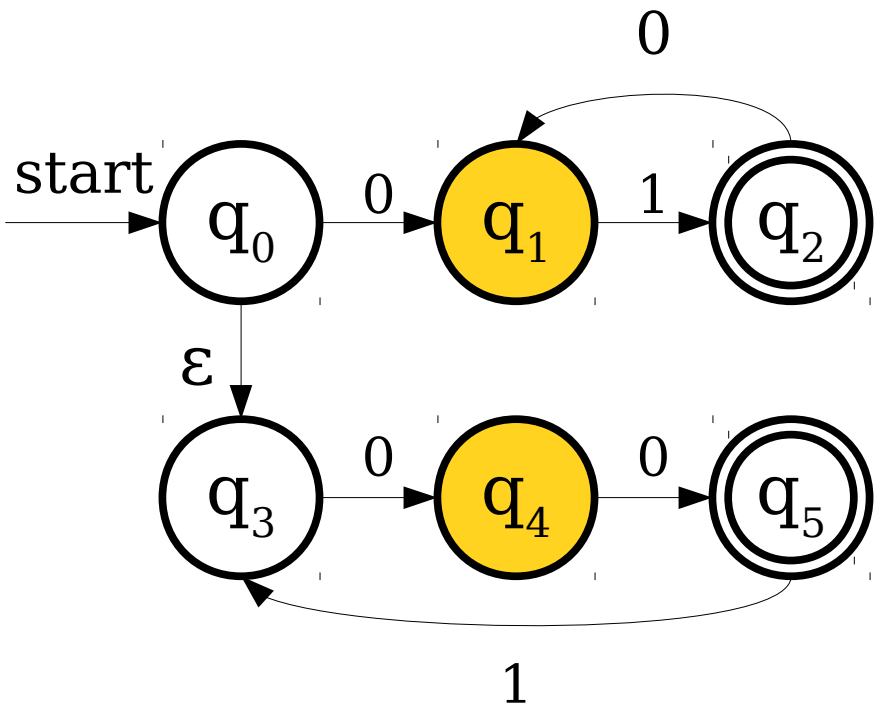

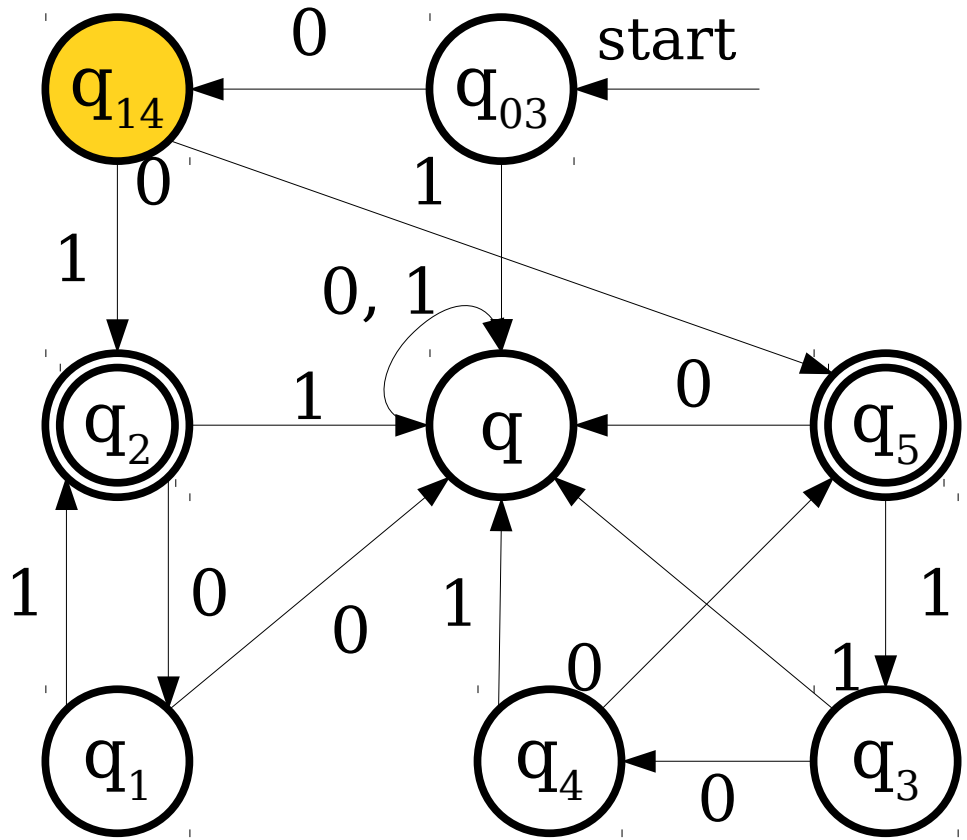

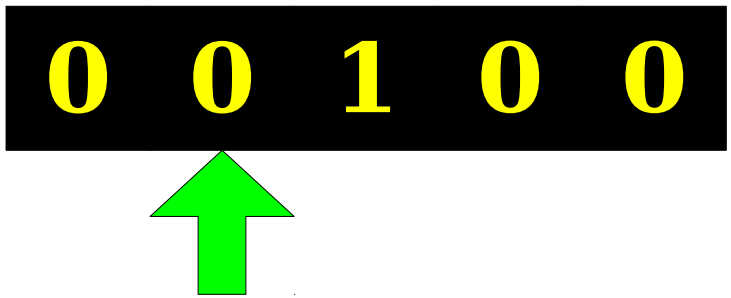

Simulating an NFA with a DFA

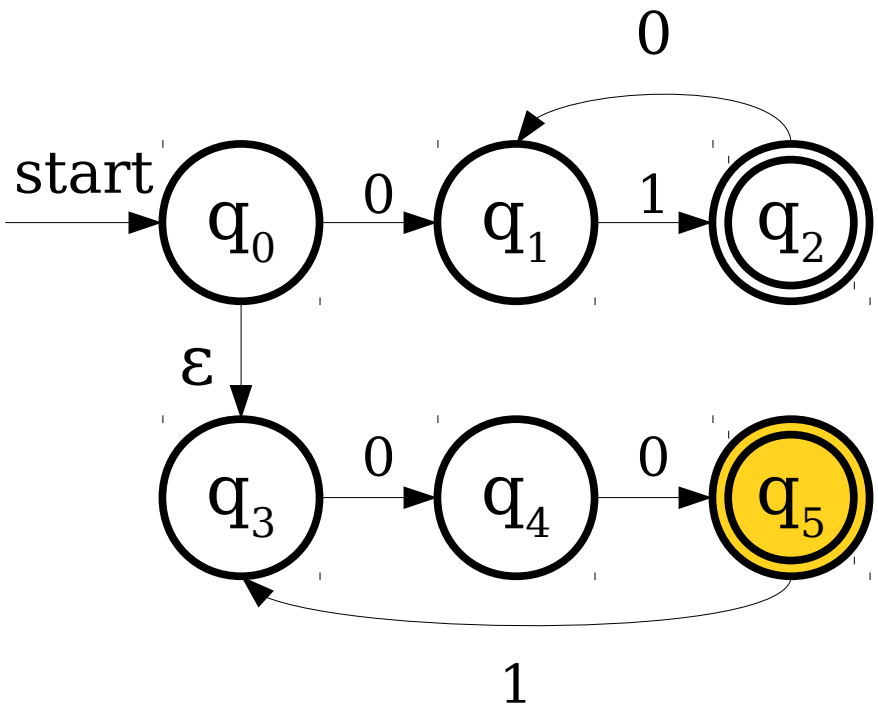

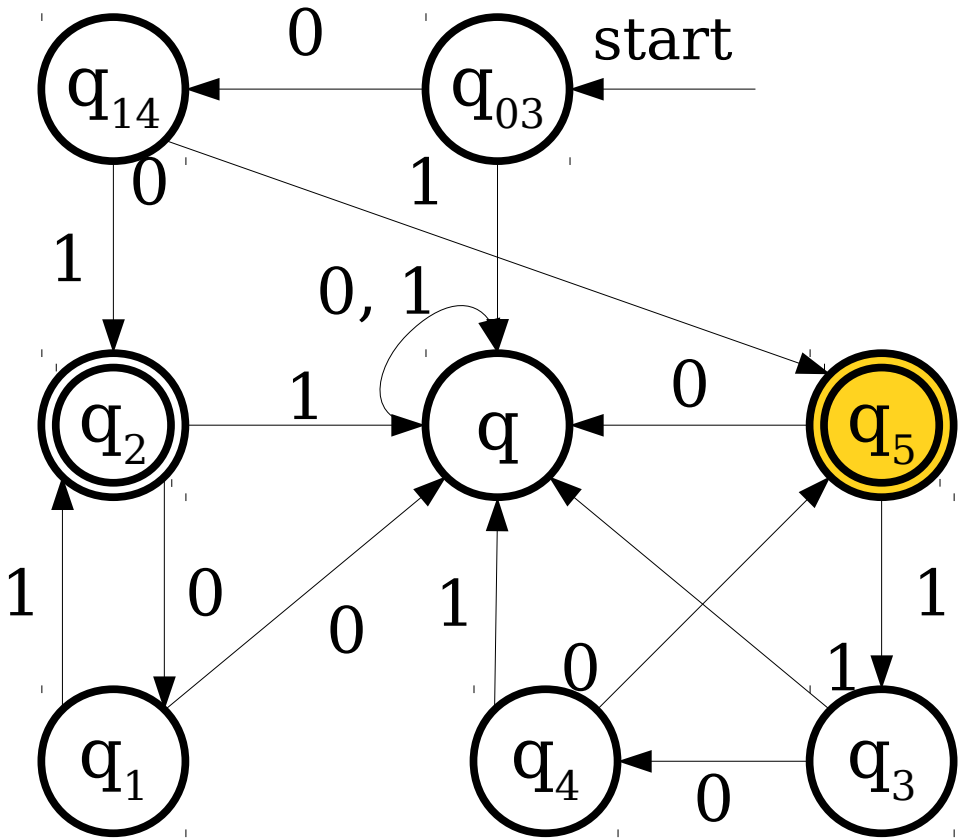

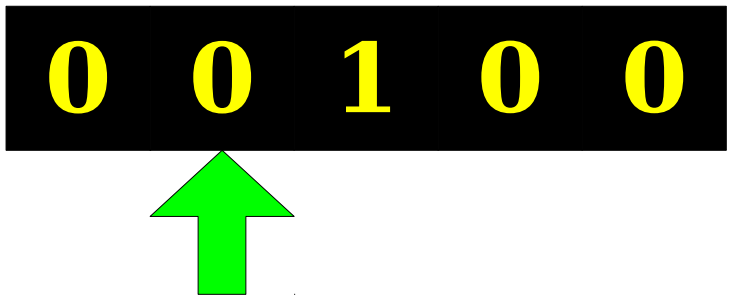

Simulating an NFA with a DFA

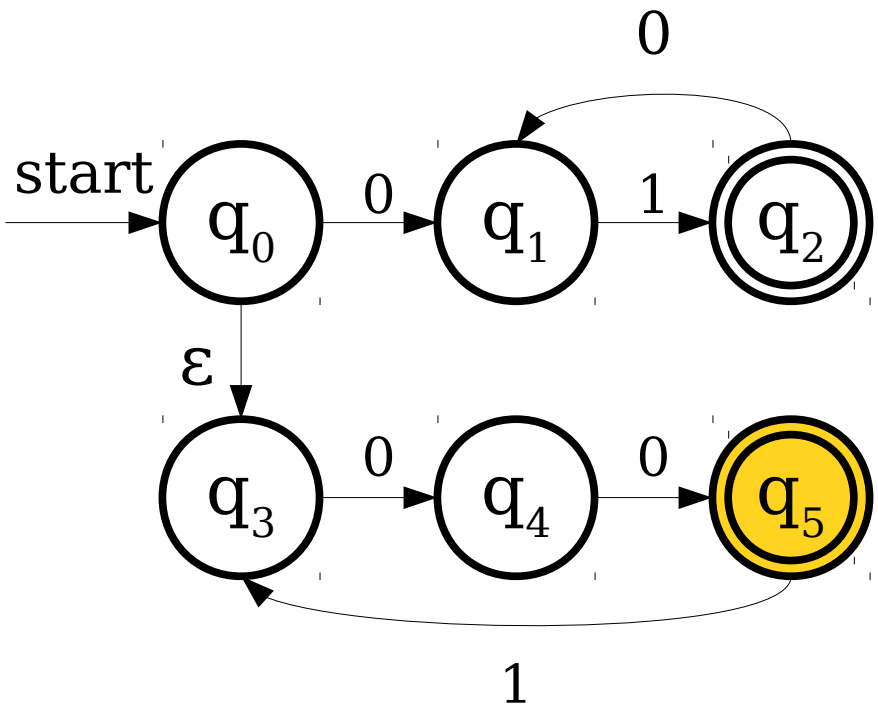

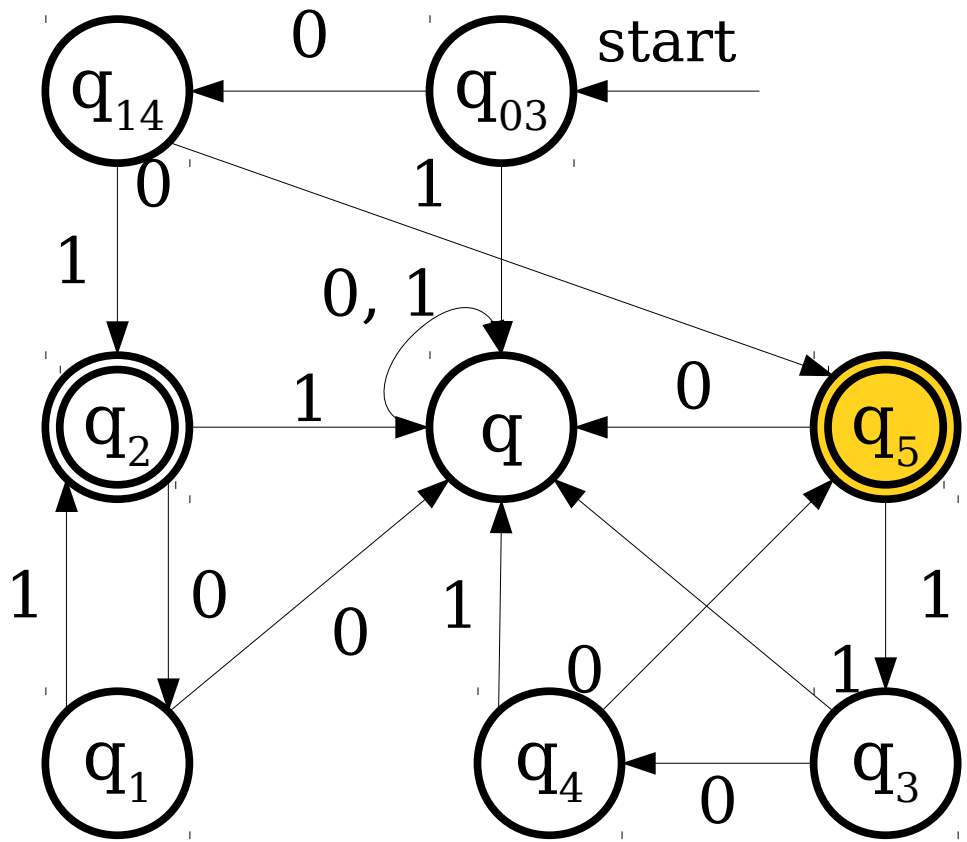

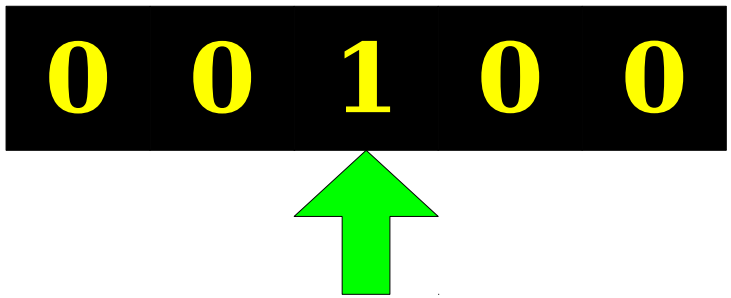

Simulating an NFA with a DFA

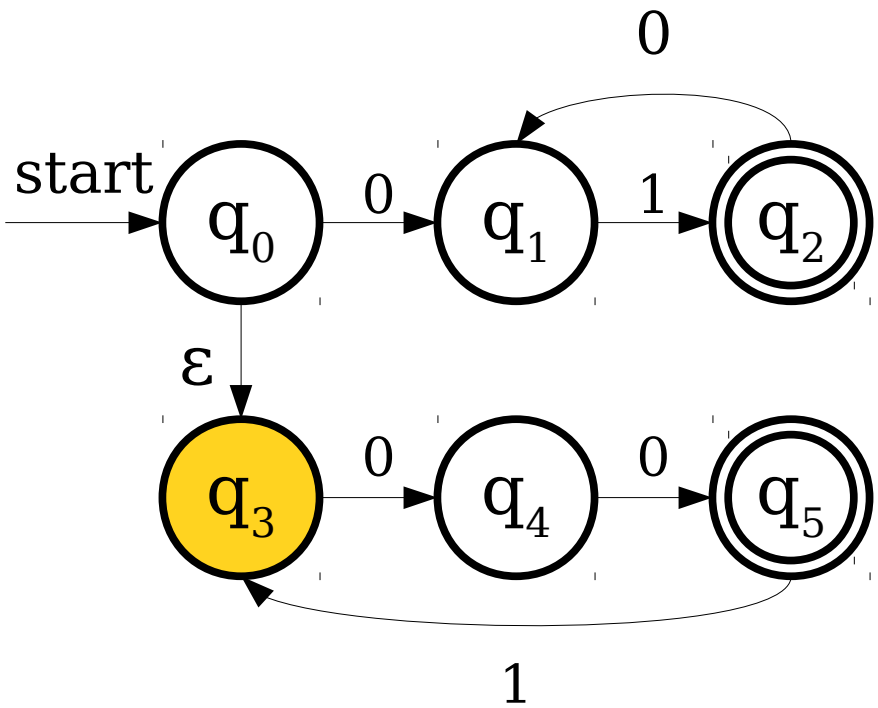

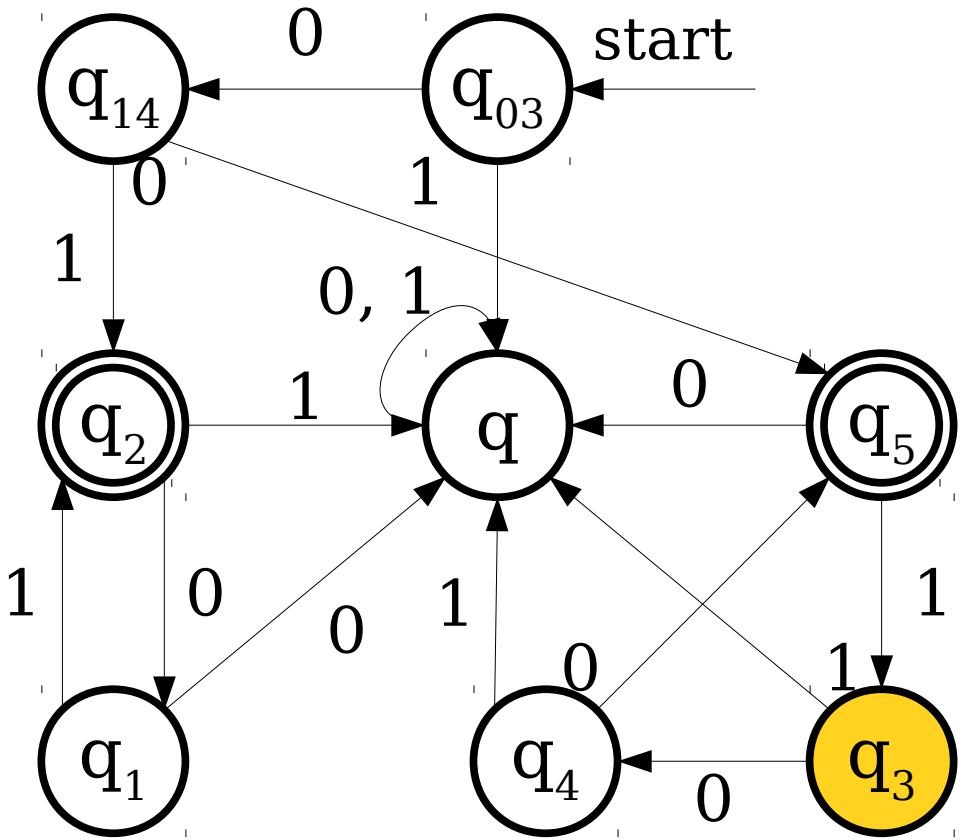

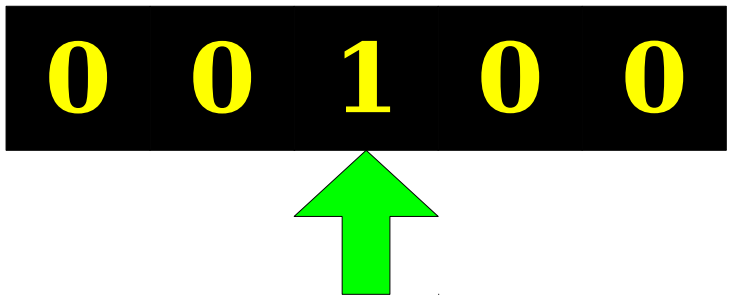

Simulating an NFA with a DFA

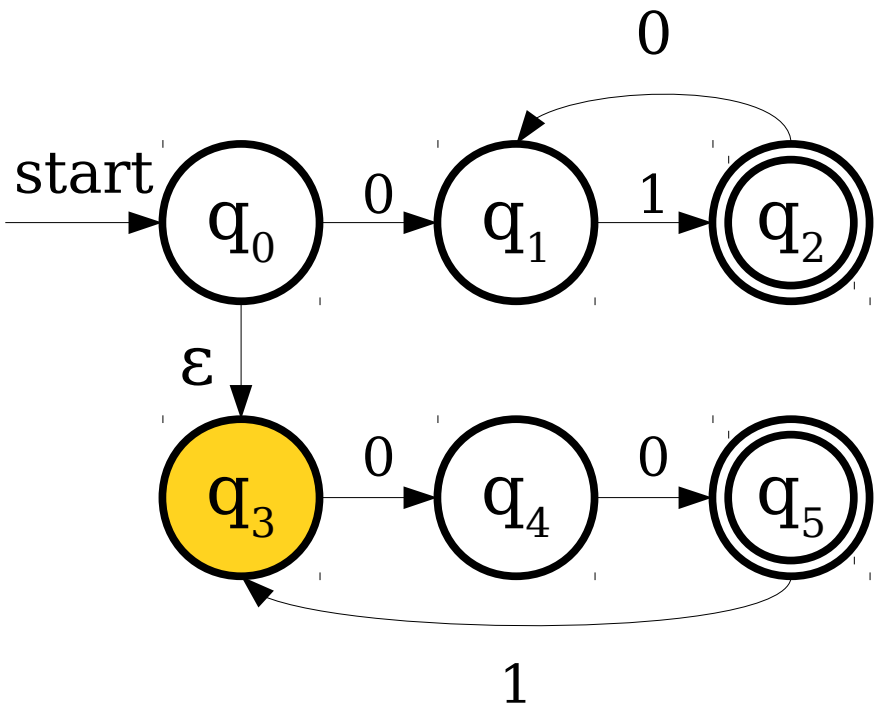

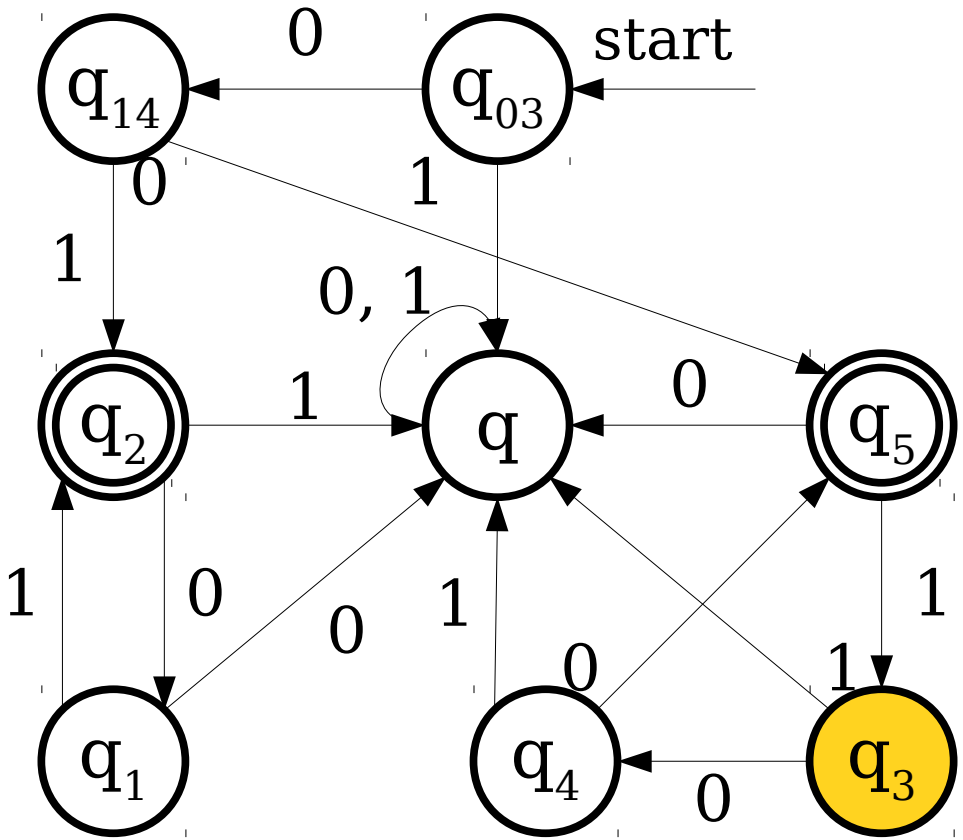

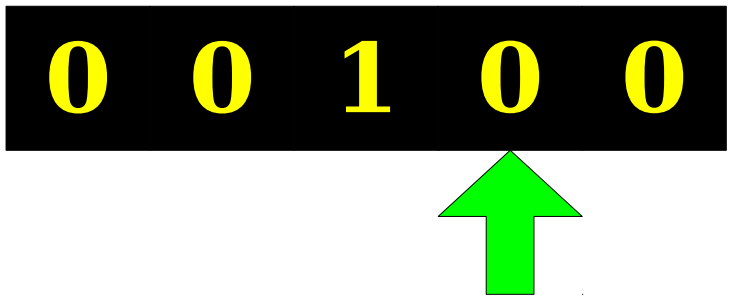

Simulating an NFA with a DFA

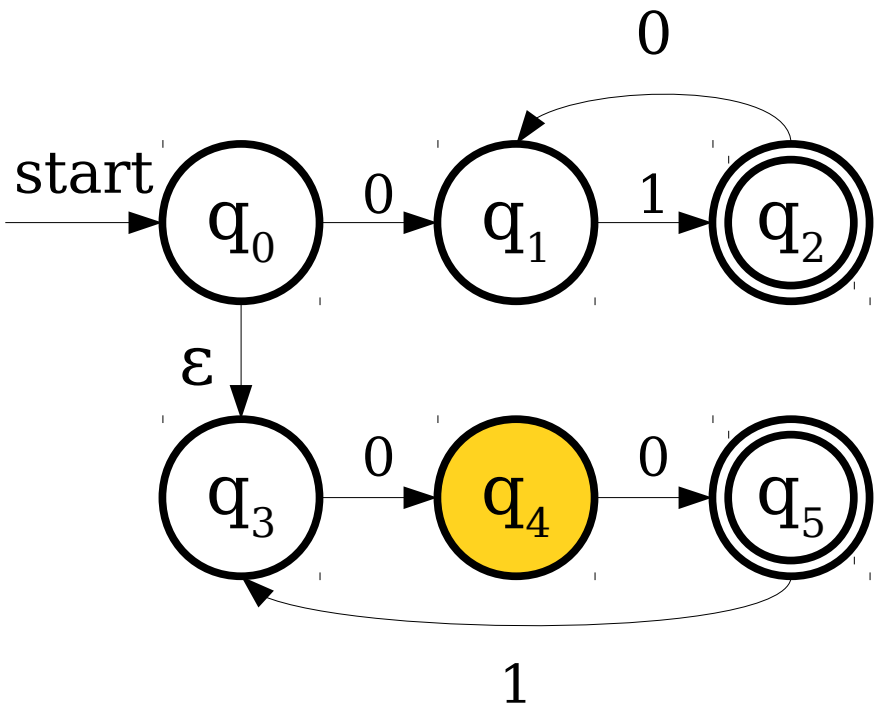

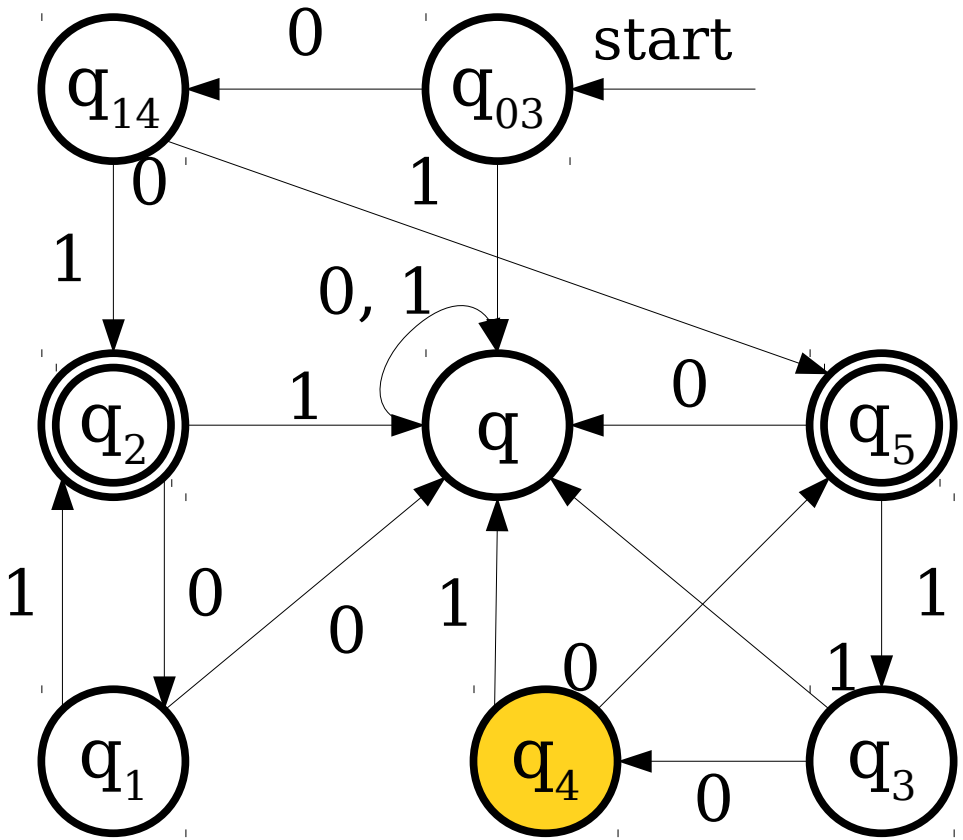

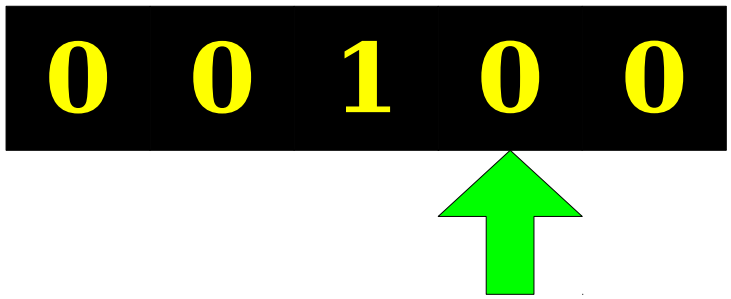

Simulating an NFA with a DFA

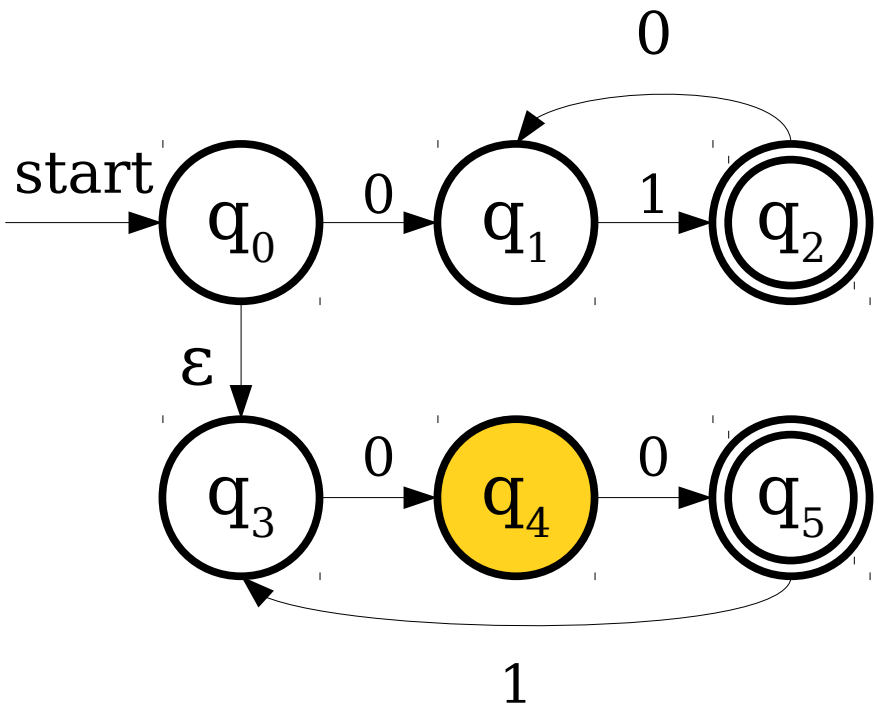

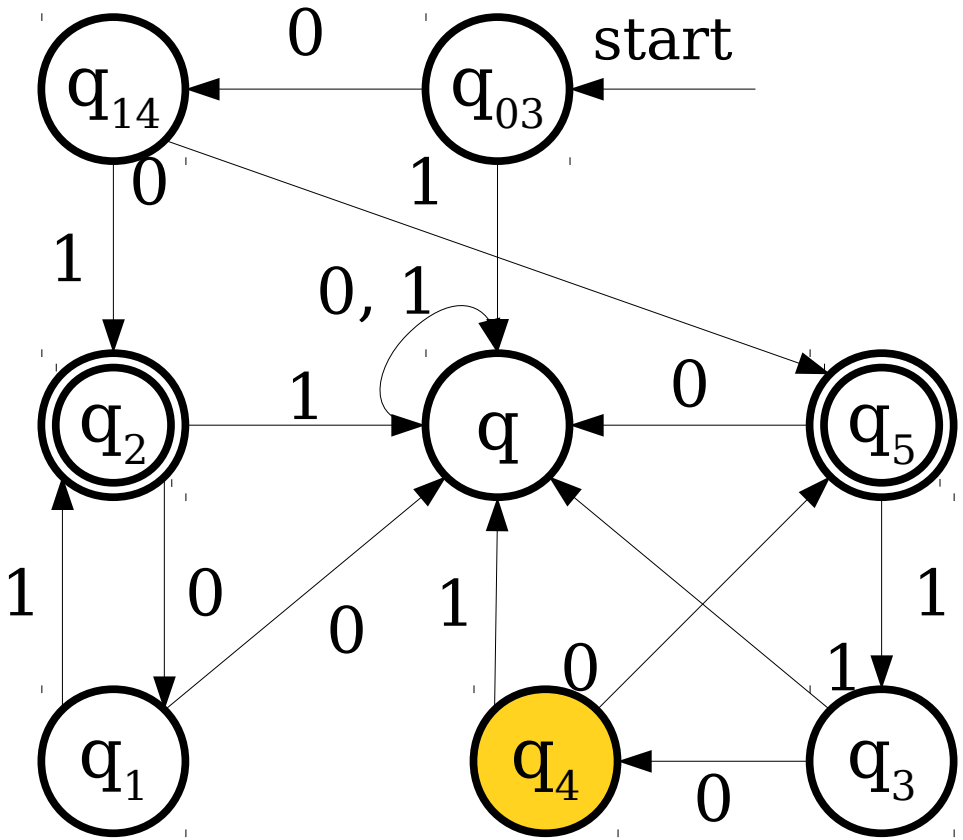

Simulating an NFA with a DFA

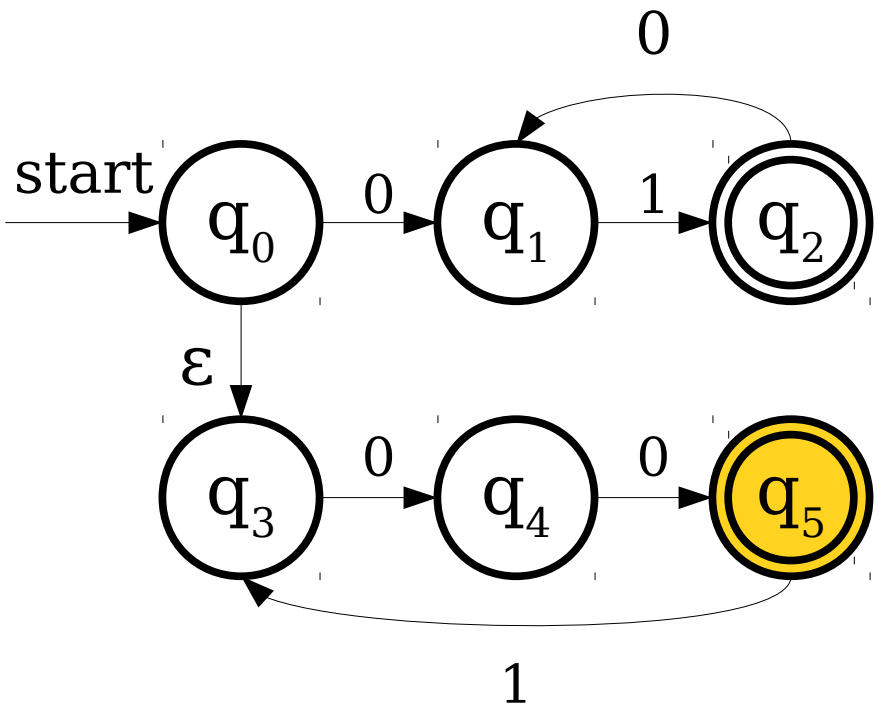

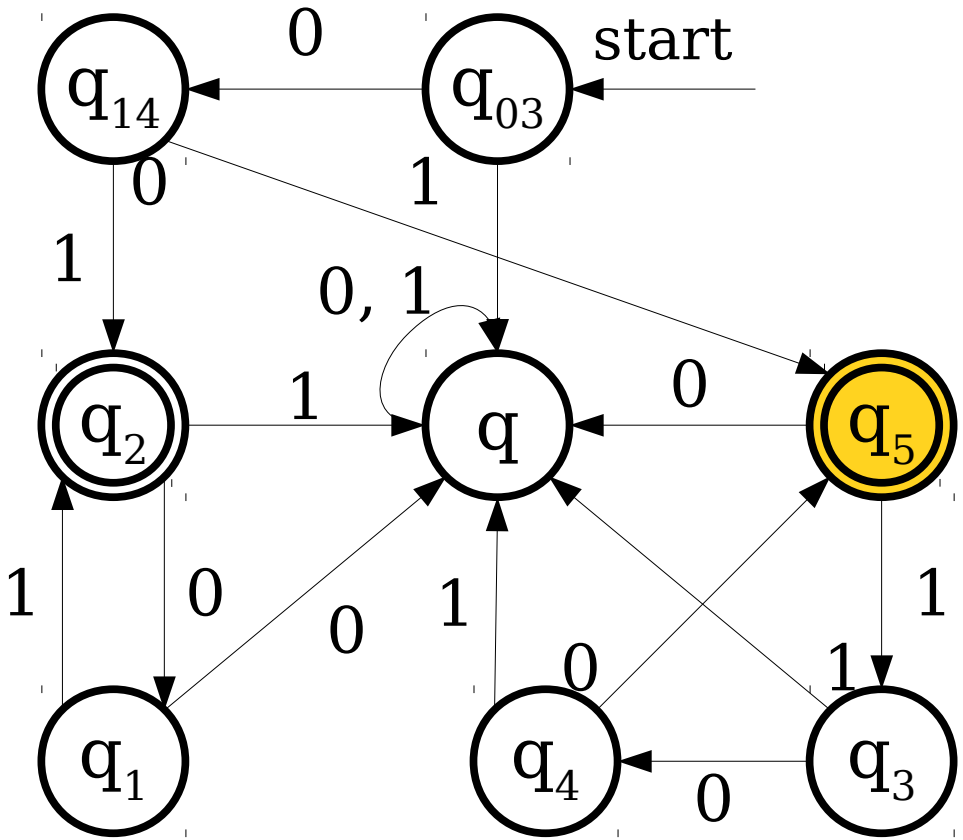

Simulating an NFA with a DFA

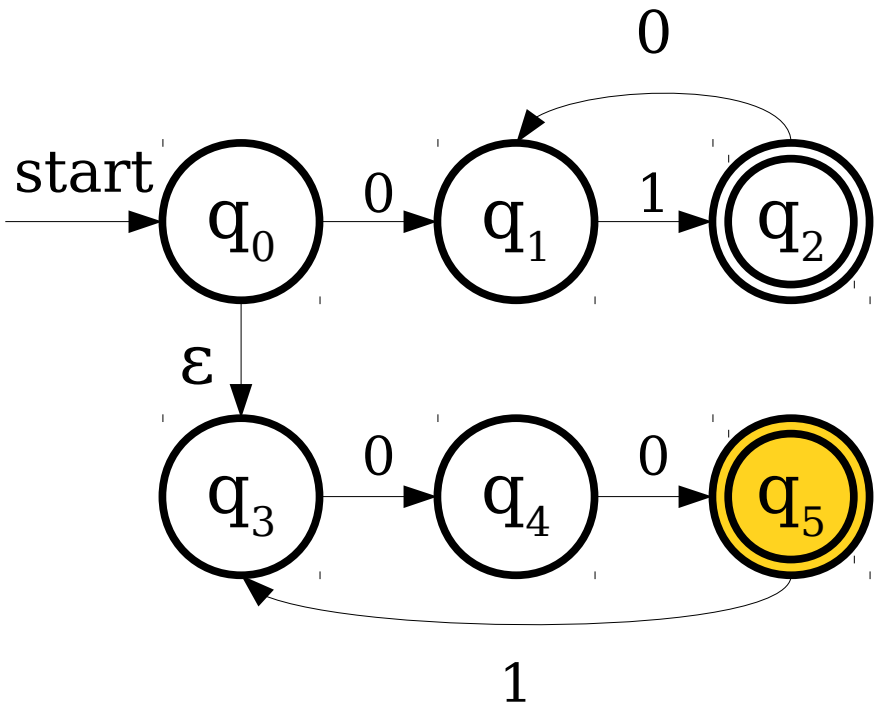

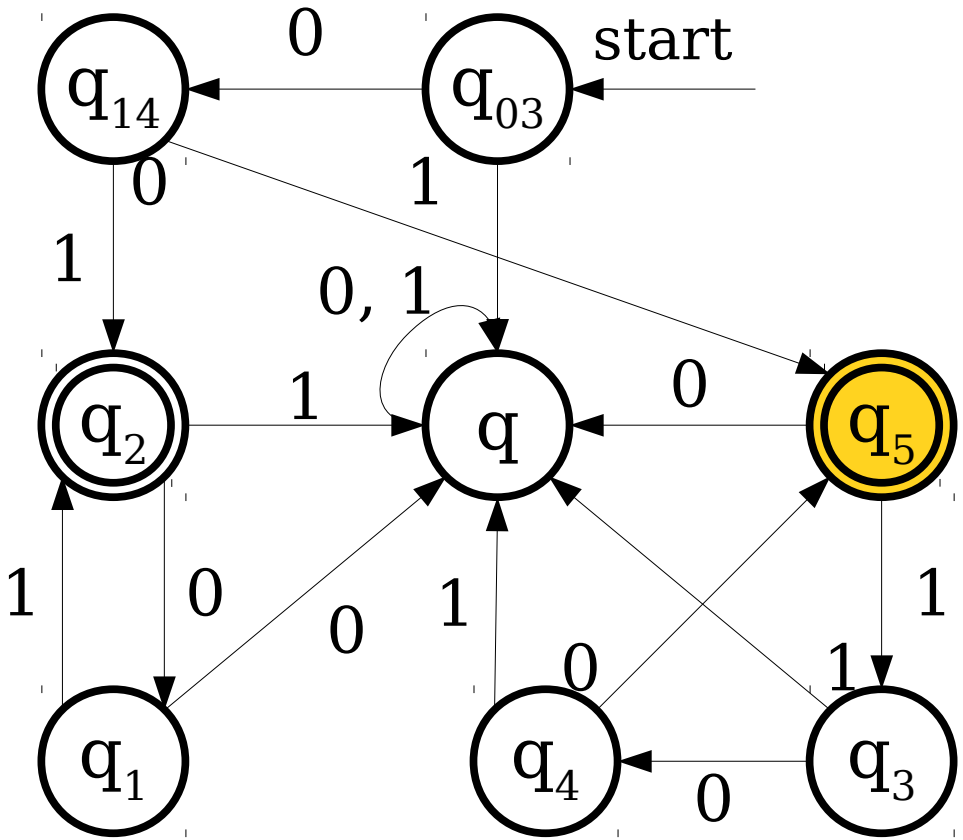

0 0 1 0 0

Simulating an NFA with a DFA

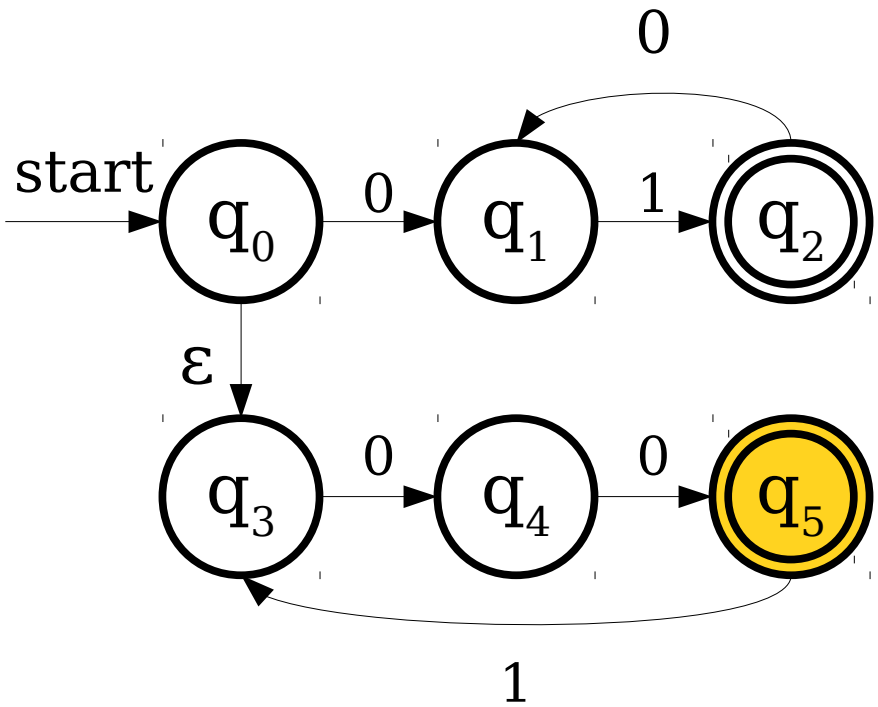

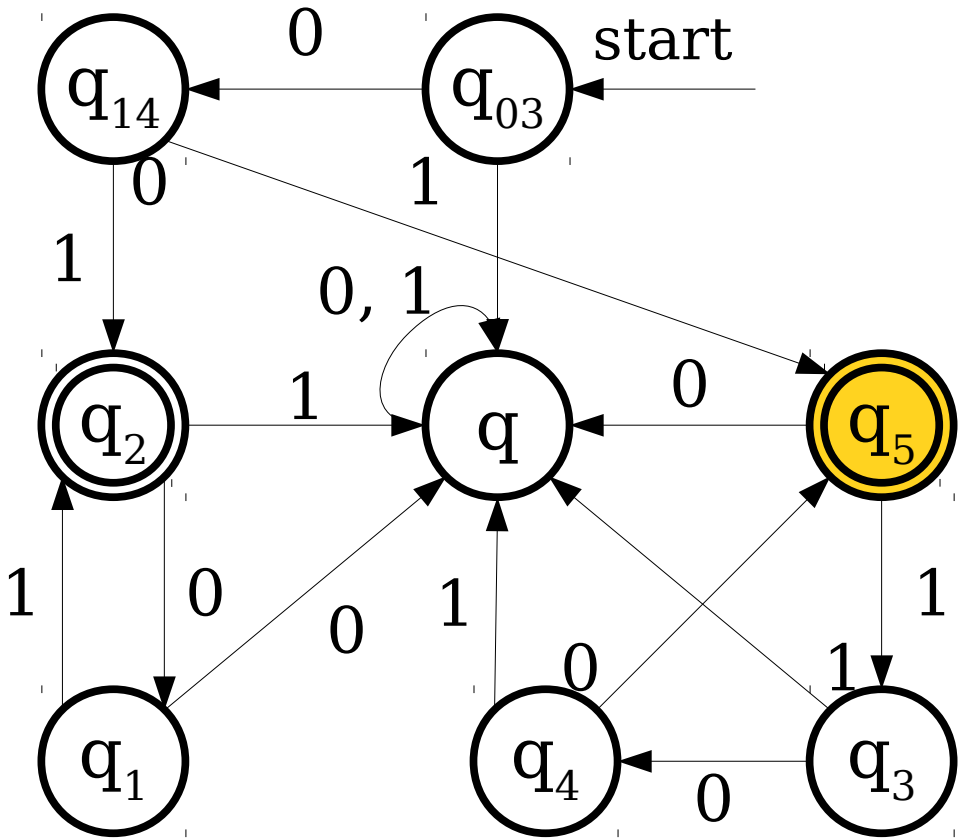

0 0 1 0 0

The Subset Construction

- This construction for transforming an NFA into a DFA is called the ***subset construction*** (or sometimes the ***powerset construction***).
  - States of the new DFA correspond to *sets of states* of the NFA.
  - The initial state is the start state, plus all states reachable from the start state via ε-transitions.
  - Transition on state *S* on character `a` is found by following all possible transitions on `a` for each state in *S*, then taking the set of states reachable from there by ε-transitions.
  - Accepting states are any set of states where *some* state in the set is an accepting state.
- ***Read Sipser for a formal account.***

The Subset Construction

- In converting an NFA to a DFA, the DFA's states correspond to sets of NFA states.
- ***Useful fact:*** $|\wp(S)| = 2^{|S|}$ for any finite set S.
- In the worst-case, the construction can result in a DFA that is *exponentially larger* than the original NFA.
- Interesting challenge: Find a language for which this worst-case behavior occurs (there are infinitely many of them!)

A language L is called a ***regular language*** if there exists a DFA D such that $\mathscr{L}(D) = L$.

An Important Result

Theorem: A language L is regular iff there is some NFA N such that $\mathscr{L}(N) = L$.

An Important Result

Theorem: A language L is regular iff there is some NFA N such that $\mathscr{L}(N) = L$.

Proof Sketch:

An Important Result

Theorem: A language L is regular iff there is some NFA N such that $\mathscr{L}(N) = L$.

Proof Sketch: If L is regular, there exists some DFA for it, which we can easily convert into an NFA.

An Important Result

Theorem: A language L is regular iff there is some NFA N such that $\mathscr{L}(N) = L$.

Proof Sketch: If L is regular, there exists some DFA for it, which we can easily convert into an NFA. If L is accepted by some NFA, we can use the subset construction to convert it into a DFA that accepts the same language, so L is regular.

An Important Result

Theorem: A language L is regular iff there is some NFA N such that $\mathscr{L}(N) = L$.

Proof Sketch: If L is regular, there exists some DFA for it, which we can easily convert into an NFA. If L is accepted by some NFA, we can use the subset construction to convert it into a DFA that accepts the same language, so L is regular. ■

Why This Matters

- We now have two perspectives on regular languages:
  - Regular languages are languages accepted by DFAs.
  - Regular languages are languages accepted by NFAs.
- We can now reason about the regular languages in two different ways.

Time-Out for Announcements!

Midterm Denouement

- The TAs will be grading the midterm exam over the weekend. We'll have it returned on Monday.
- We'll release solution sets, common mistakes, the rationale behind each question, and exam statistics along with the exam.

Problem Set Four

- As a reminder, Problem Set Four is due this upcoming Monday at 12:50PM.
- Please feel free to ask questions!
  - Email the staff list!
  - Ask on Piazza!
  - Stop by office hours!

WiCS Board

- “Apply for WiCS Board by midnight tonight! You **do not** have to be a declared CS major and all years are welcome! We have a wide variety of events planned for next year and you can be a part of helping WiCS be bigger than it has ever been! Please reach out if you have questions!”
- **Click here** to apply.

Back to CS103!

Properties of Regular Languages

The Union of Two Languages

- If L_1 and L_2 are languages over the alphabet Σ, the language $L_1 \cup L_2$ is the language of all strings in at least one of the two languages.
- If L_1 and L_2 are regular languages, is $L_1 \cup L_2$?

The Union of Two Languages

- If L_1 and L_2 are languages over the alphabet Σ, the language $L_1 \cup L_2$ is the language of all strings in at least one of the two languages.
- If L_1 and L_2 are regular languages, is $L_1 \cup L_2$?

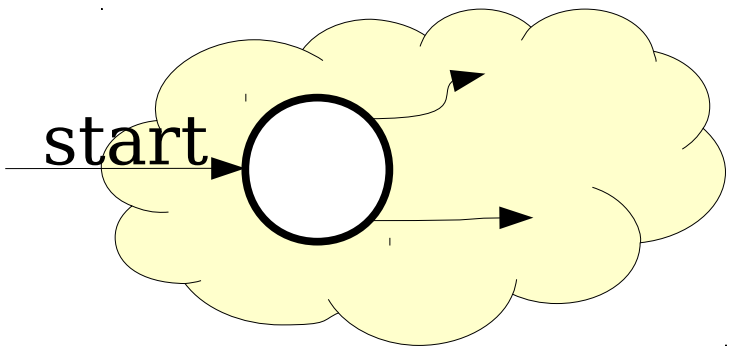

Machine for L_1

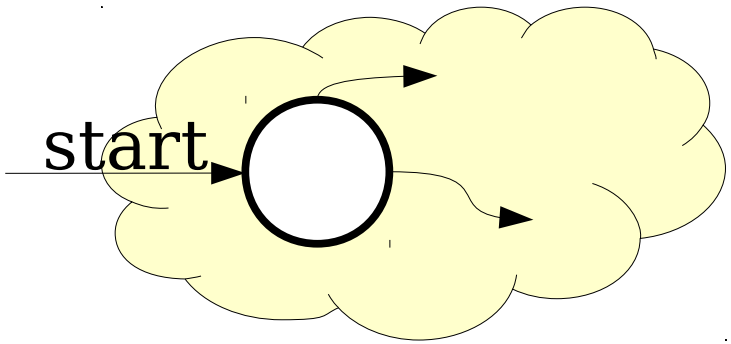

Machine for L_2

The Union of Two Languages

- If L_1 and L_2 are languages over the alphabet Σ, the language $L_1 \cup L_2$ is the language of all strings in at least one of the two languages.
- If L_1 and L_2 are regular languages, is $L_1 \cup L_2$?

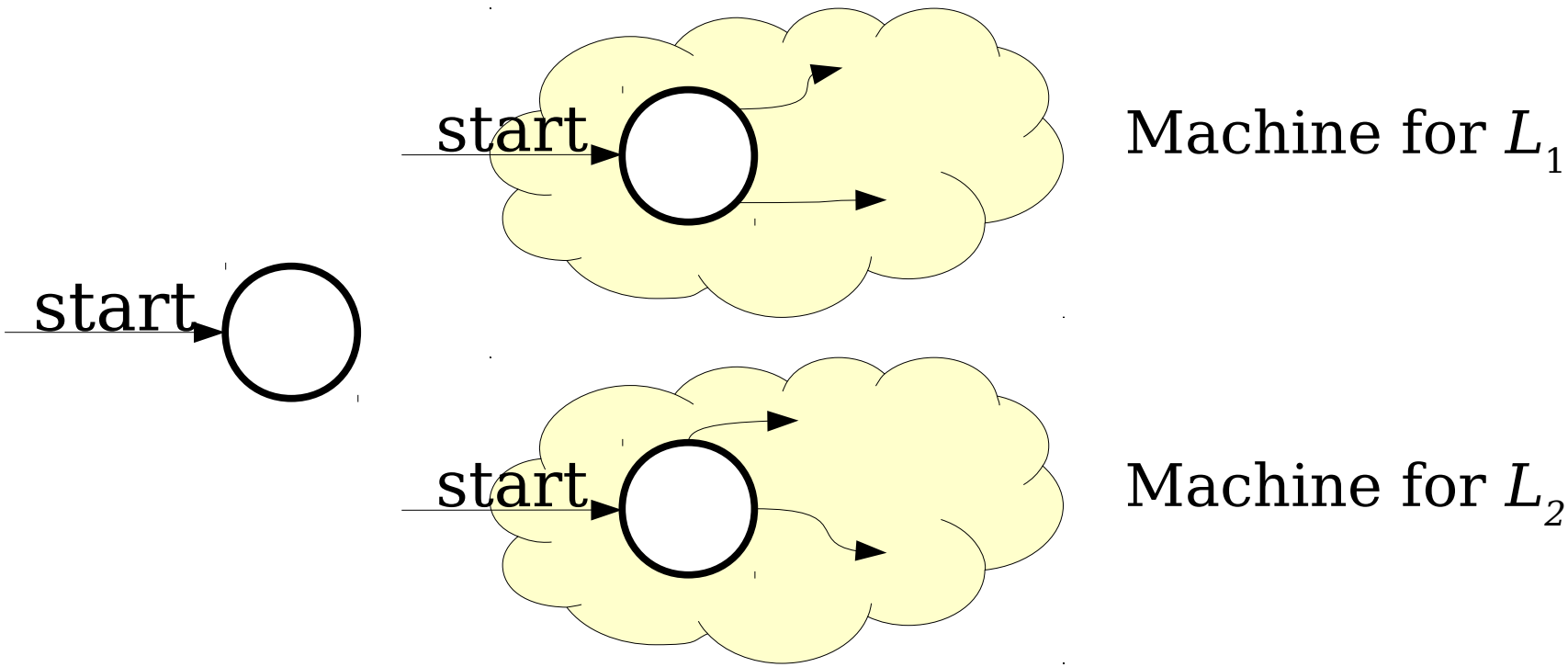

The Union of Two Languages

- If L_1 and L_2 are languages over the alphabet Σ, the language $L_1 \cup L_2$ is the language of all strings in at least one of the two languages.
- If L_1 and L_2 are regular languages, is $L_1 \cup L_2$?

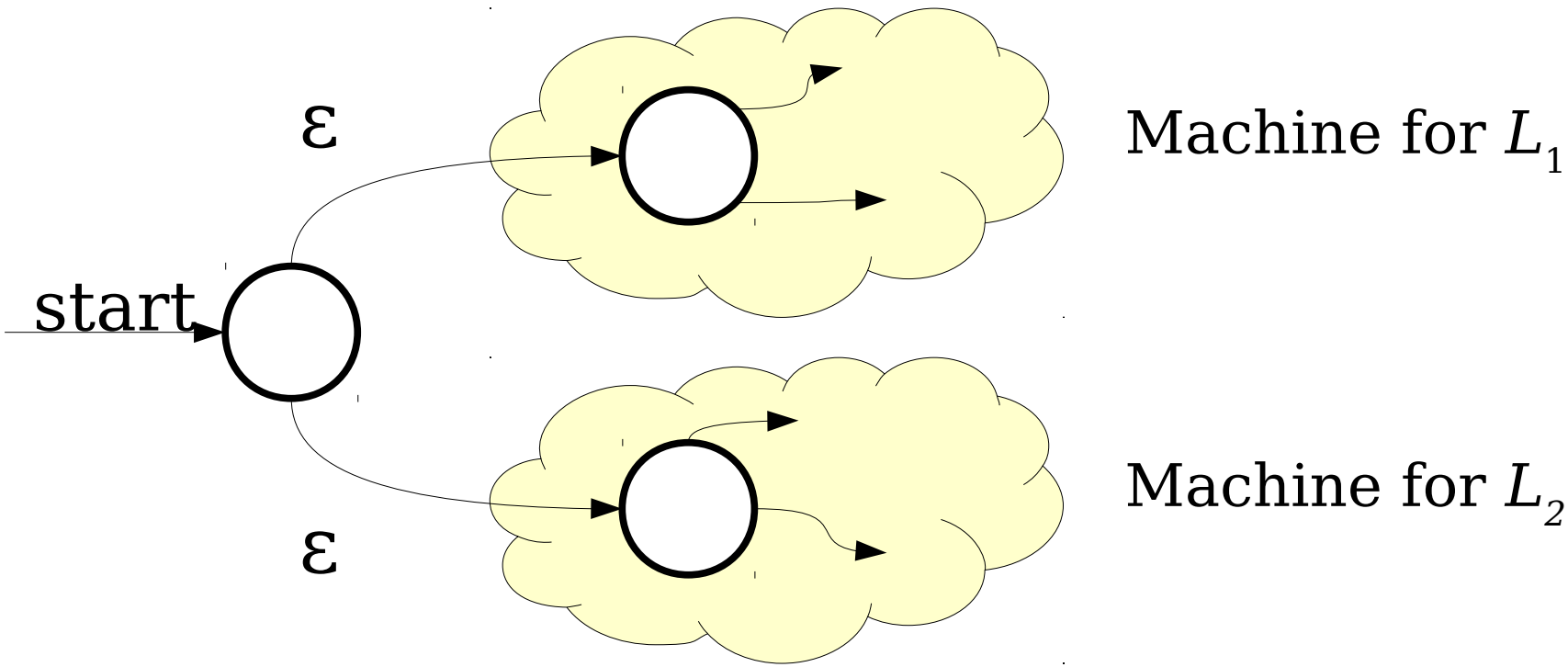

The Union of Two Languages

- If L_1 and L_2 are languages over the alphabet Σ, the language $L_1 \cup L_2$ is the language of all strings in at least one of the two languages.
- If L_1 and L_2 are regular languages, is $L_1 \cup L_2$?

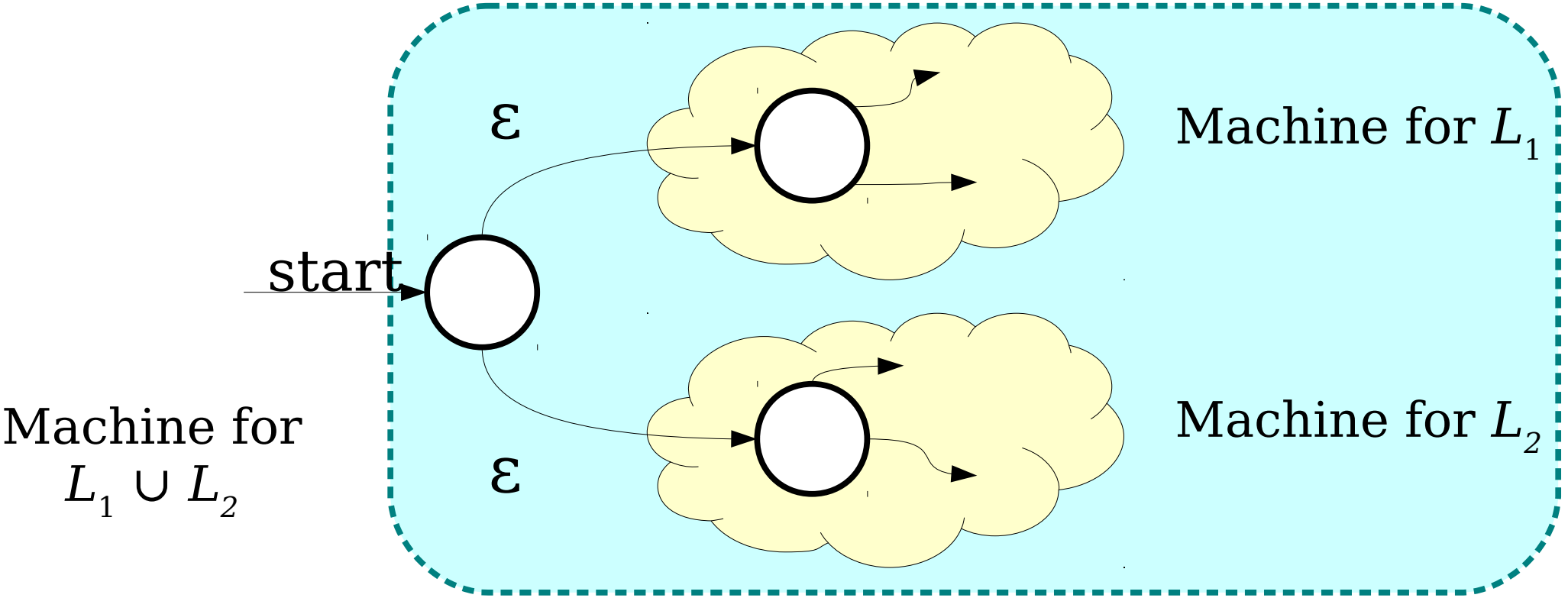

The Intersection of Two Languages

- If L_1 and L_2 are languages over Σ, then $L_1 \cap L_2$ is the language of strings in both L_1 and L_2.
- Question: If L_1 and L_2 are regular, is $L_1 \cap L_2$ regular as well?

The Intersection of Two Languages

- If L_1 and L_2 are languages over Σ, then $L_1 \cap L_2$ is the language of strings in both L_1 and L_2.
- Question: If L_1 and L_2 are regular, is $L_1 \cap L_2$ regular as well?

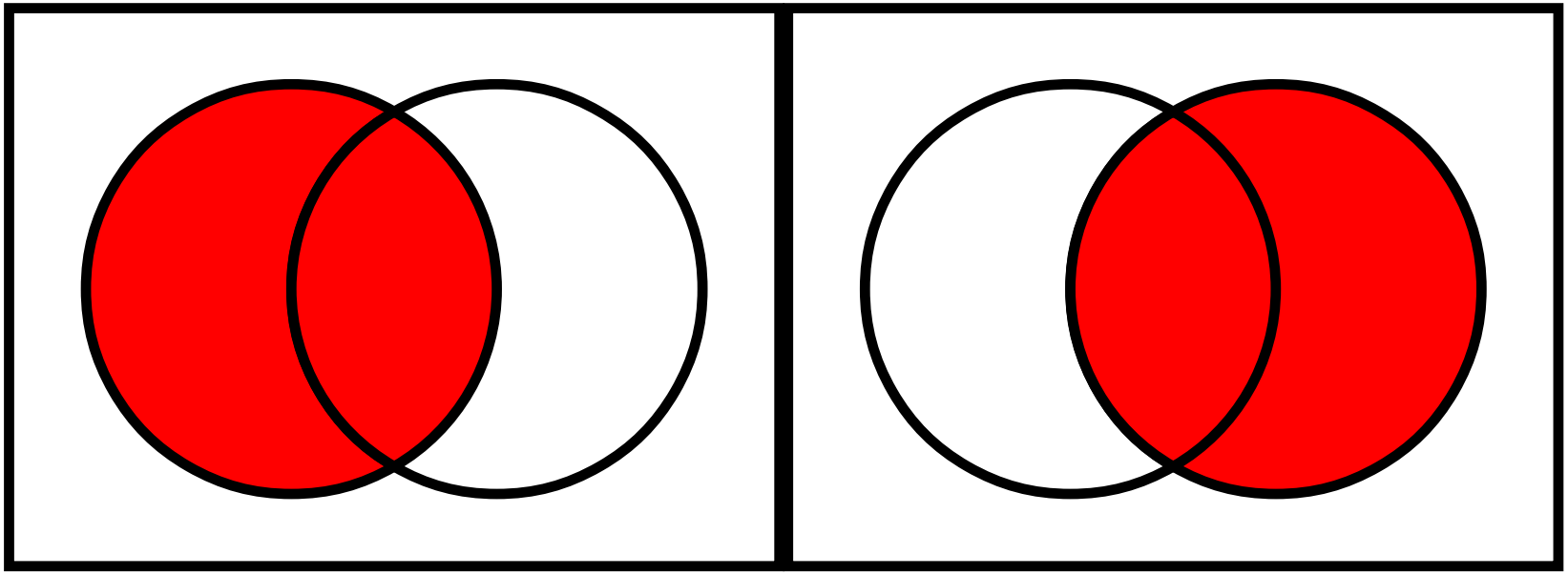

L_1 L_2

The Intersection of Two Languages

- If L_1 and L_2 are languages over Σ, then $L_1 \cap L_2$ is the language of strings in both L_1 and L_2.
- Question: If L_1 and L_2 are regular, is $L_1 \cap L_2$ regular as well?

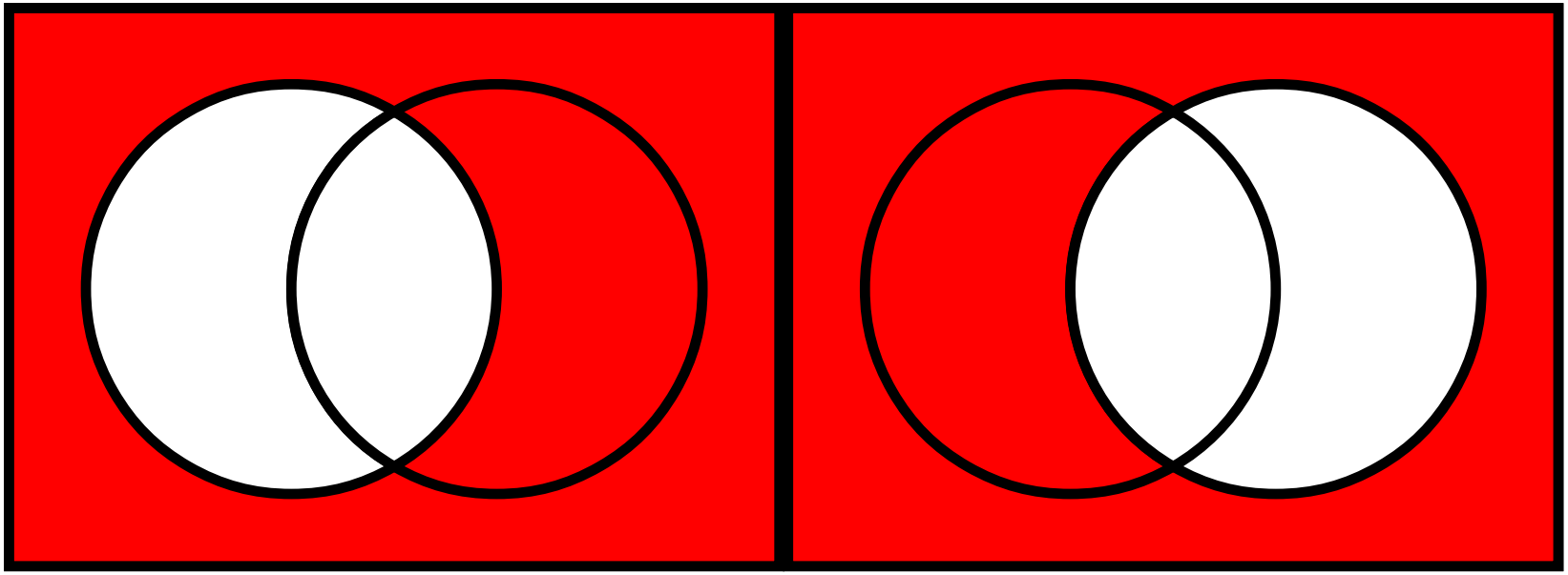

$\overline{L}_1$ $\overline{L}_2$

The Intersection of Two Languages

- If L_1 and L_2 are languages over Σ, then $L_1 \cap L_2$ is the language of strings in both L_1 and L_2.
- Question: If L_1 and L_2 are regular, is $L_1 \cap L_2$ regular as well?

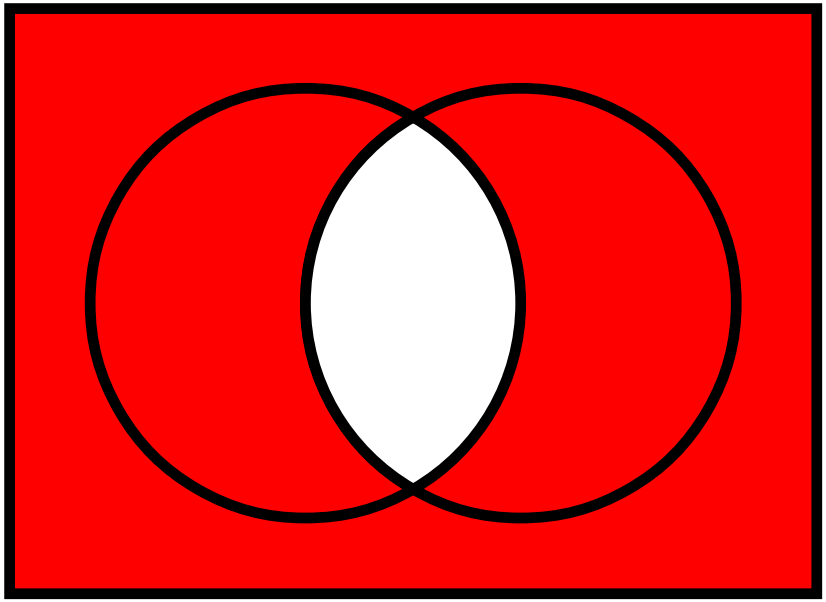

$$\overline{L}_1 \cup \overline{L}_2$$

The Intersection of Two Languages

- If L_1 and L_2 are languages over Σ, then $L_1 \cap L_2$ is the language of strings in both L_1 and L_2.
- Question: If L_1 and L_2 are regular, is $L_1 \cap L_2$ regular as well?

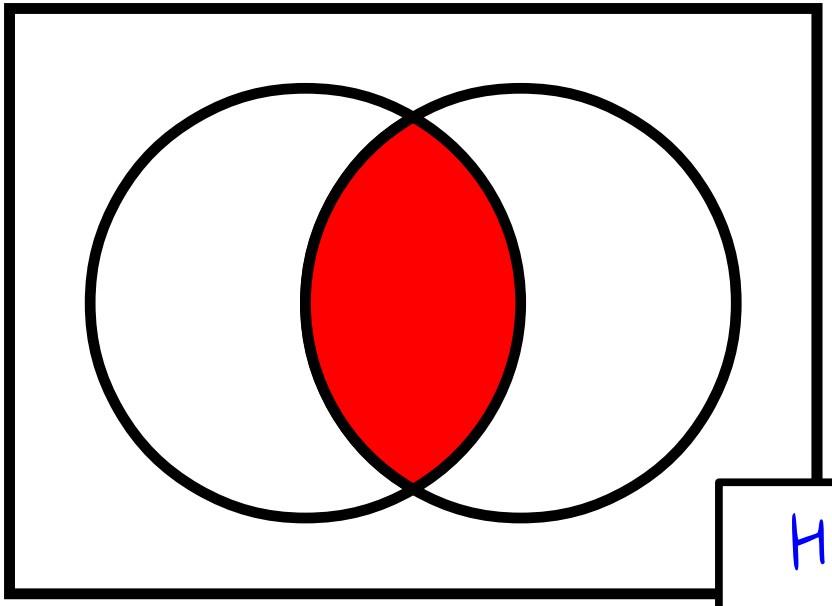

$$\overline{\overline{L_1} \cup \overline{L_2}}$$

Hey, it's De Morgan's laws!

Concatenation

String Concatenation

- If $w \in \Sigma^*$ and $x \in \Sigma^*$, the ***concatenation*** of w and x, denoted wx, is the string formed by tacking all the characters of x onto the end of w.
- Example: if w = **quo** and x = **kka**, the concatenation wx = **quokka**.
- Analogous to the + operator for strings in many programming languages.

Concatenation

- The ***concatenation*** of two languages L_1 and L_2 over the alphabet Σ is the language

$$L_1L_2 = \{ wx \in \Sigma^* \mid w \in L_1 \wedge x \in L_2 \}$$

Concatenation Example

- Let Σ = { **a**, **b**, ..., **z**, **A**, **B**, ..., **Z** } and consider these languages over Σ:
  - ***Noun*** = { **Puppy**, **Rainbow**, **Whale**, ... }
  - ***Verb*** = { **Hugs**, **Juggles**, **Loves**, ... }
  - ***The*** = { **The** }
- The language ***TheNounVerbTheNoun*** is

  { **ThePuppyHugsTheWhale**,
  TheWhaleLovesTheRainbow,
  TheRainbowJugglesTheRainbow, ... }

Concatenation

- The ***concatenation*** of two languages L_1 and L_2 over the alphabet Σ is the language

$$L_1L_2 = \{ wx \in \Sigma^* \mid w \in L_1 \land x \in L_2 \}$$

- Two views of L_1L_2:
  - The set of all strings that can be made by concatenating a string in L_1 with a string in L_2.
  - The set of strings that can be split into two pieces: a piece from L_1 and a piece from L_2.
- Conceptually similar to the Cartesian product of two sets, only with strings.

Concatenating Regular Languages

- If L_1 and L_2 are regular languages, is L_1L_2?
- Intuition – can we split a string w into two strings xy such that $x \in L_1$ and $y \in L_2$?

Concatenating Regular Languages

- If L_1 and L_2 are regular languages, is L_1L_2?
- Intuition – can we split a string w into two strings xy such that $x \in L_1$ and $y \in L_2$?

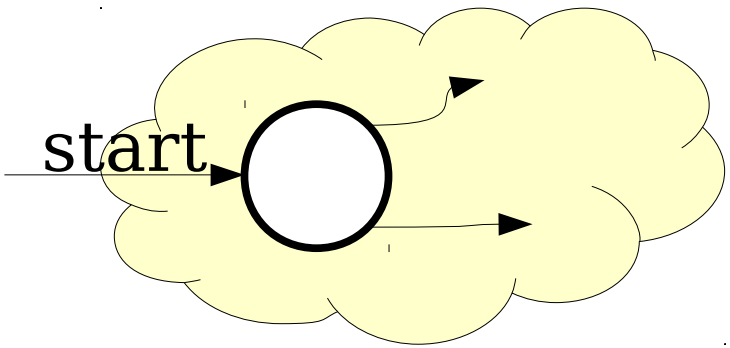

Machine for L_1

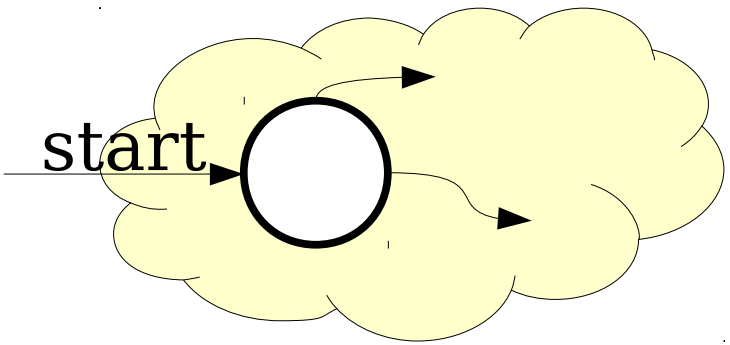

Machine for L_2

Concatenating Regular Languages

- If L_1 and L_2 are regular languages, is L_1L_2?
- Intuition – can we split a string w into two strings xy such that $x \in L_1$ and $y \in L_2$?

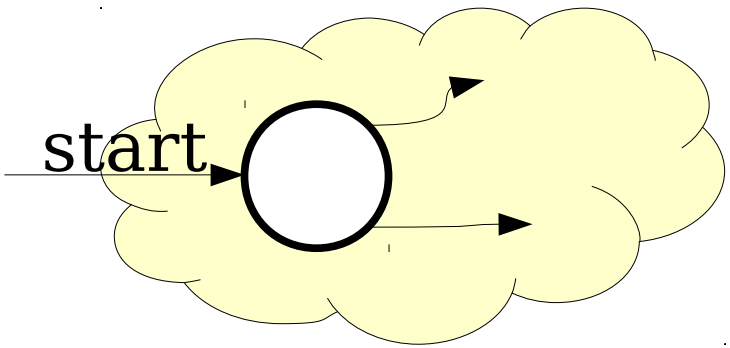

Machine for L_1

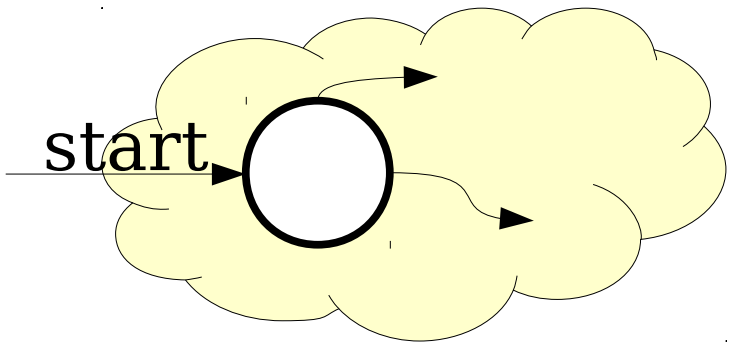

Machine for L_2

b	**o**	**o**	**k**	**k**	**e**	**e**	**p**	**e**	**r**

Concatenating Regular Languages

- If L_1 and L_2 are regular languages, is L_1L_2?
- Intuition – can we split a string w into two strings xy such that $x \in L_1$ and $y \in L_2$?

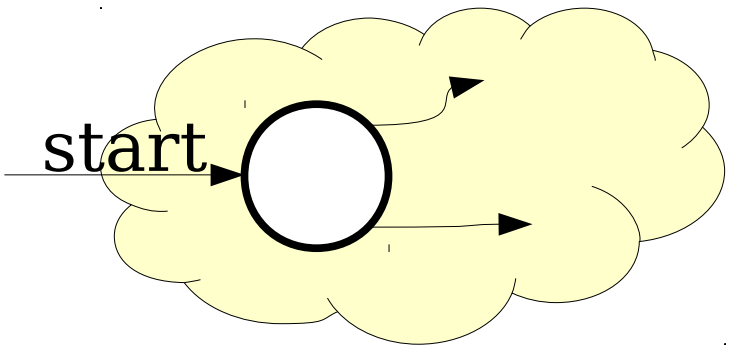

Machine for L_1

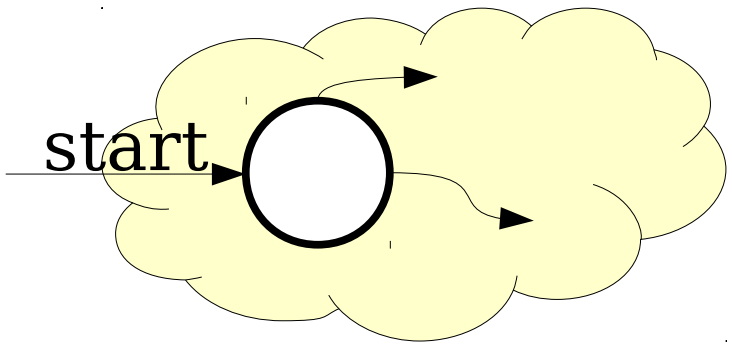

Machine for L_2

b	**o**	**o**	**k**	**k**	**e**	**e**	**p**	**e**	**r**

Concatenating Regular Languages

- If L_1 and L_2 are regular languages, is L_1L_2?
- Intuition – can we split a string w into two strings xy such that $x \in L_1$ and $y \in L_2$?

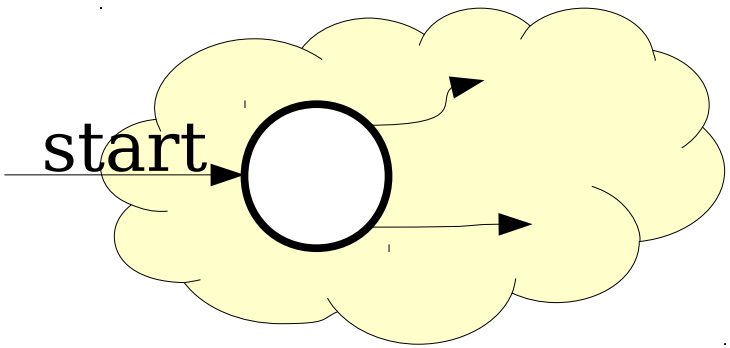

Machine for L_1

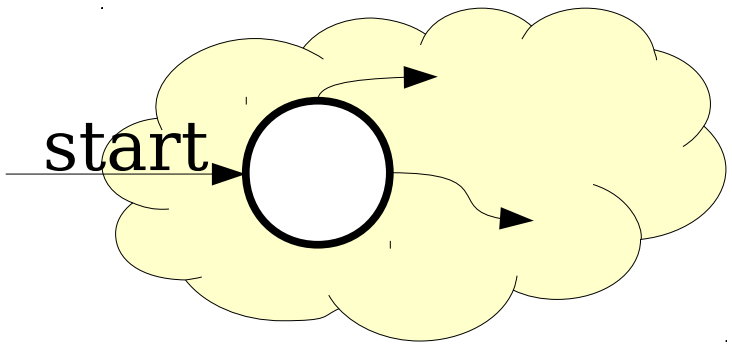

Machine for L_2

b	**o**	**o**	**k**

k	**e**	**e**	**p**	**e**	**r**

Concatenating Regular Languages

- If L_1 and L_2 are regular languages, is L_1L_2?
- Intuition – can we split a string w into two strings xy such that $x \in L_1$ and $y \in L_2$?
- **Idea**: Run the automaton for L_1 on w, and whenever L_1 reaches an accepting state, optionally hand the rest off w to L_2.
  - If L_2 accepts the remainder, then L_1 accepted the first part and the string is in L_1L_2.
  - If L_2 rejects the remainder, then the split was incorrect.

Concatenating Regular Languages

Concatenating Regular Languages

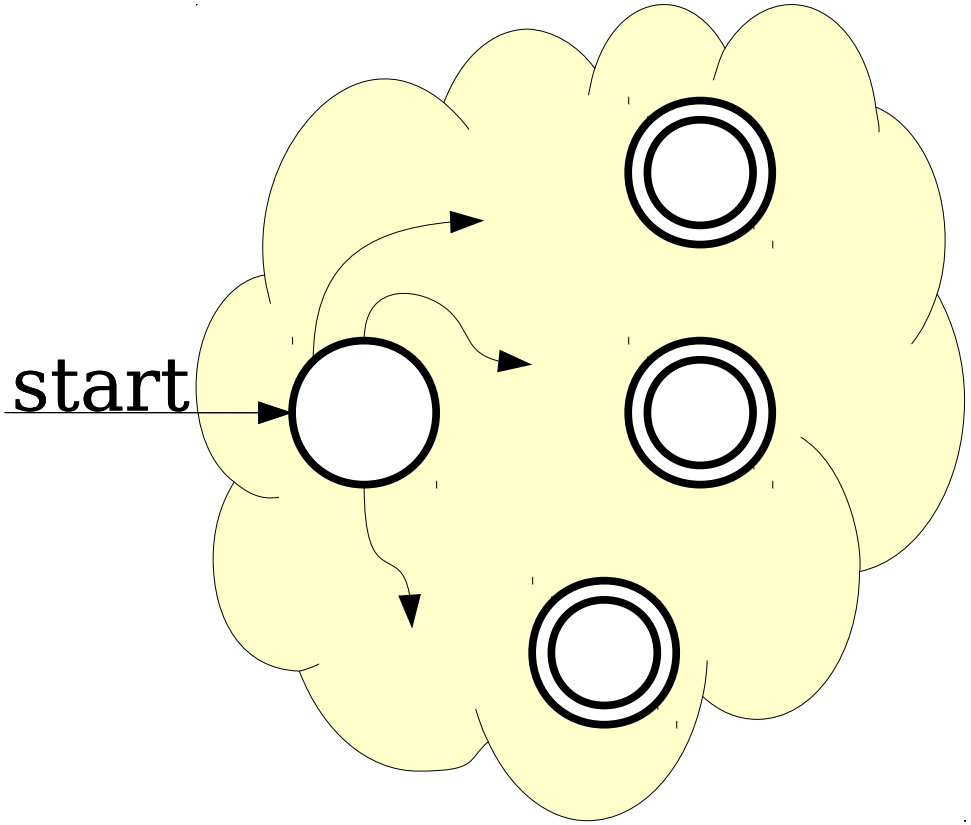

Machine for L_1

Concatenating Regular Languages

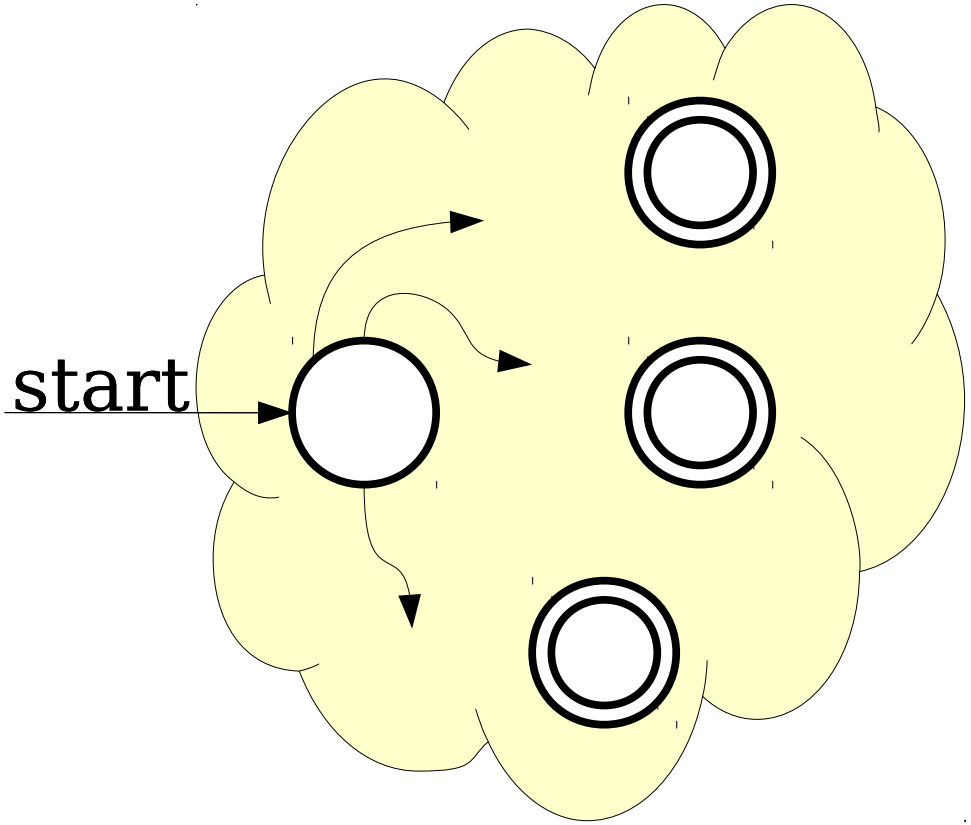

Machine for L_1

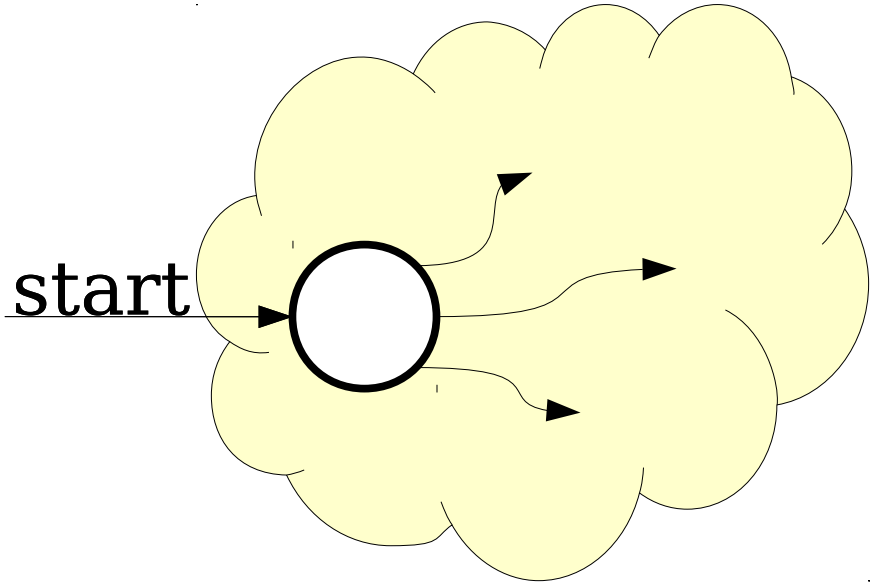

Machine for L_2

Concatenating Regular Languages

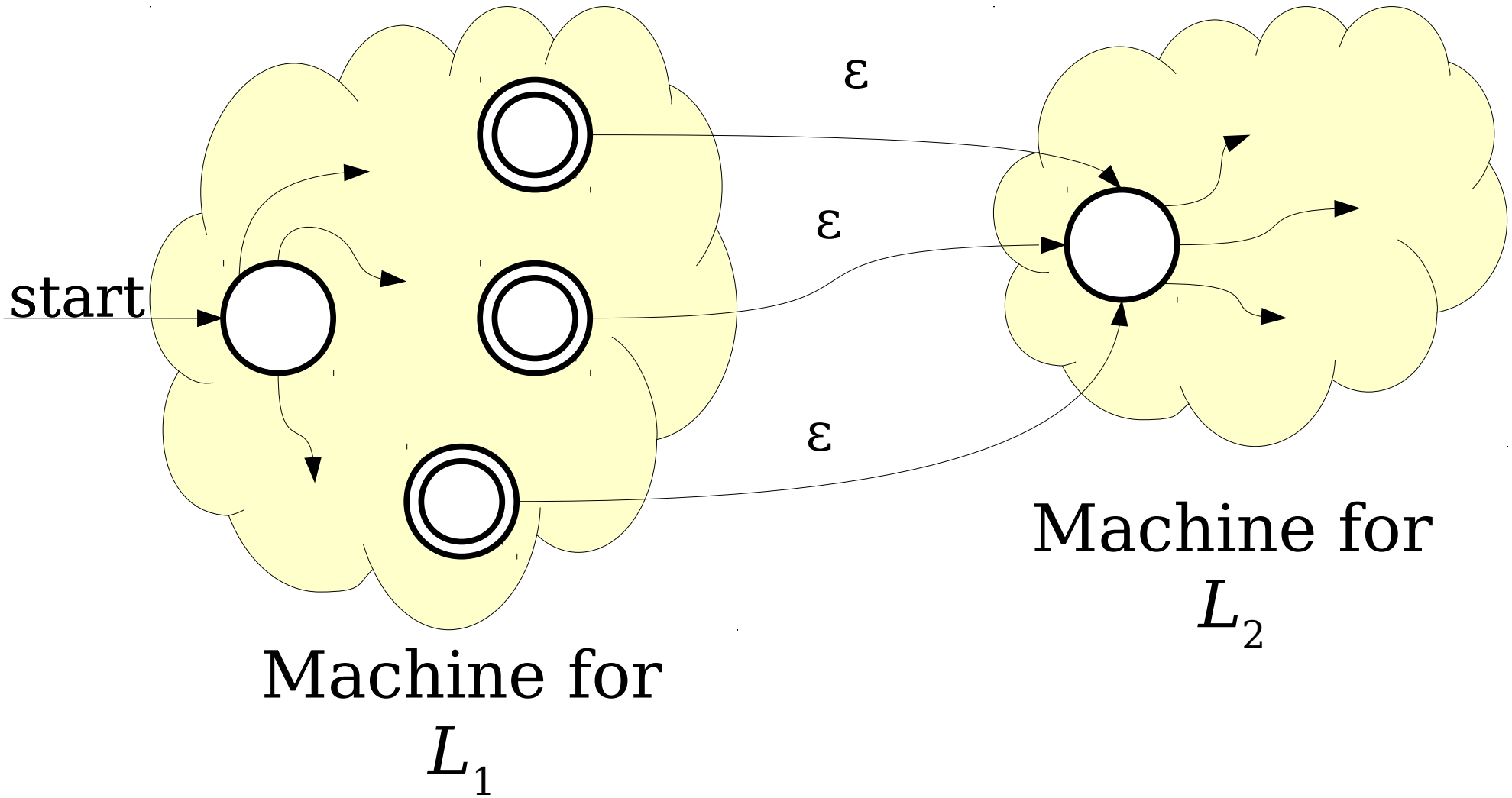

Concatenating Regular Languages

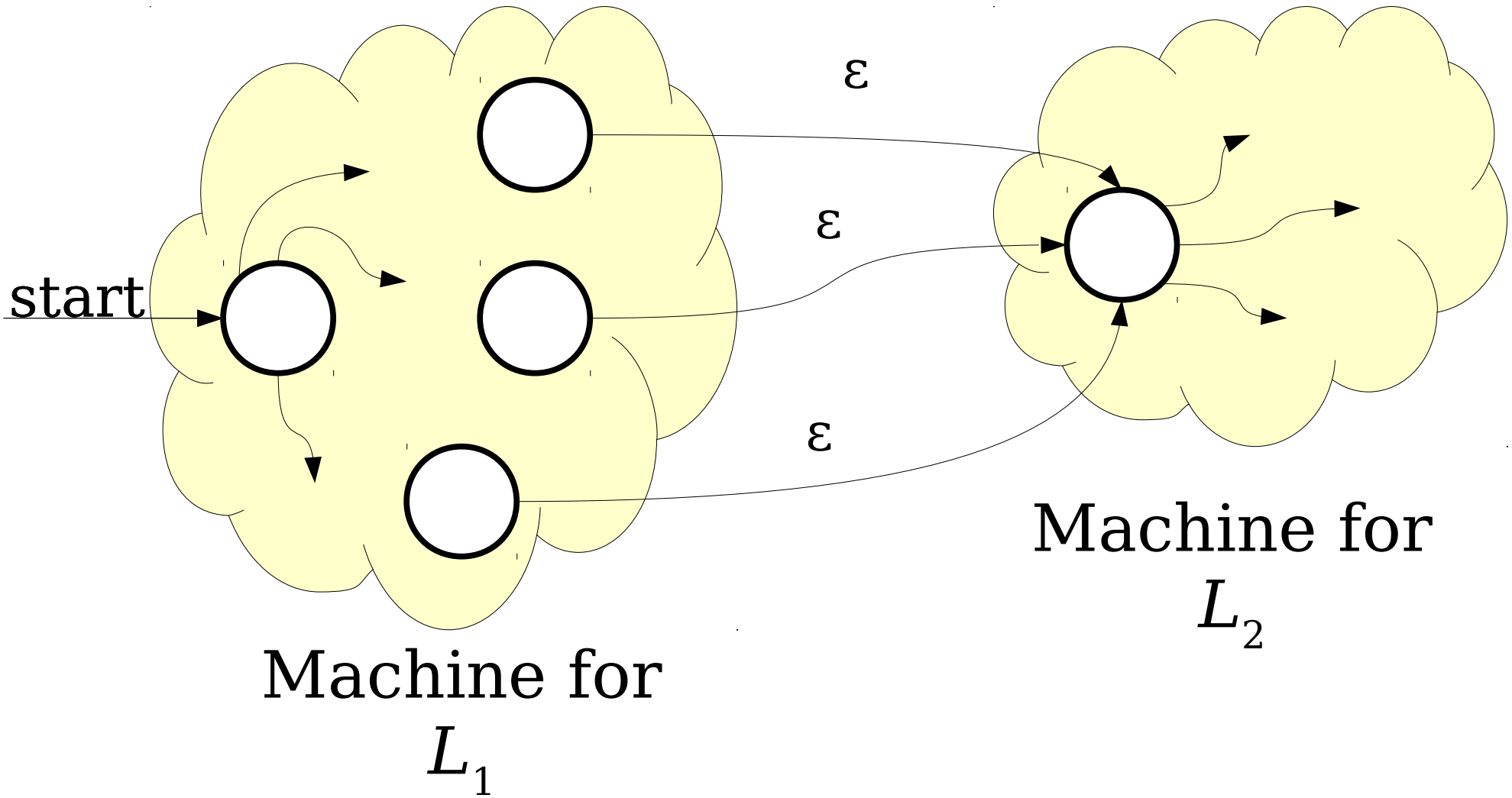

Concatenating Regular Languages

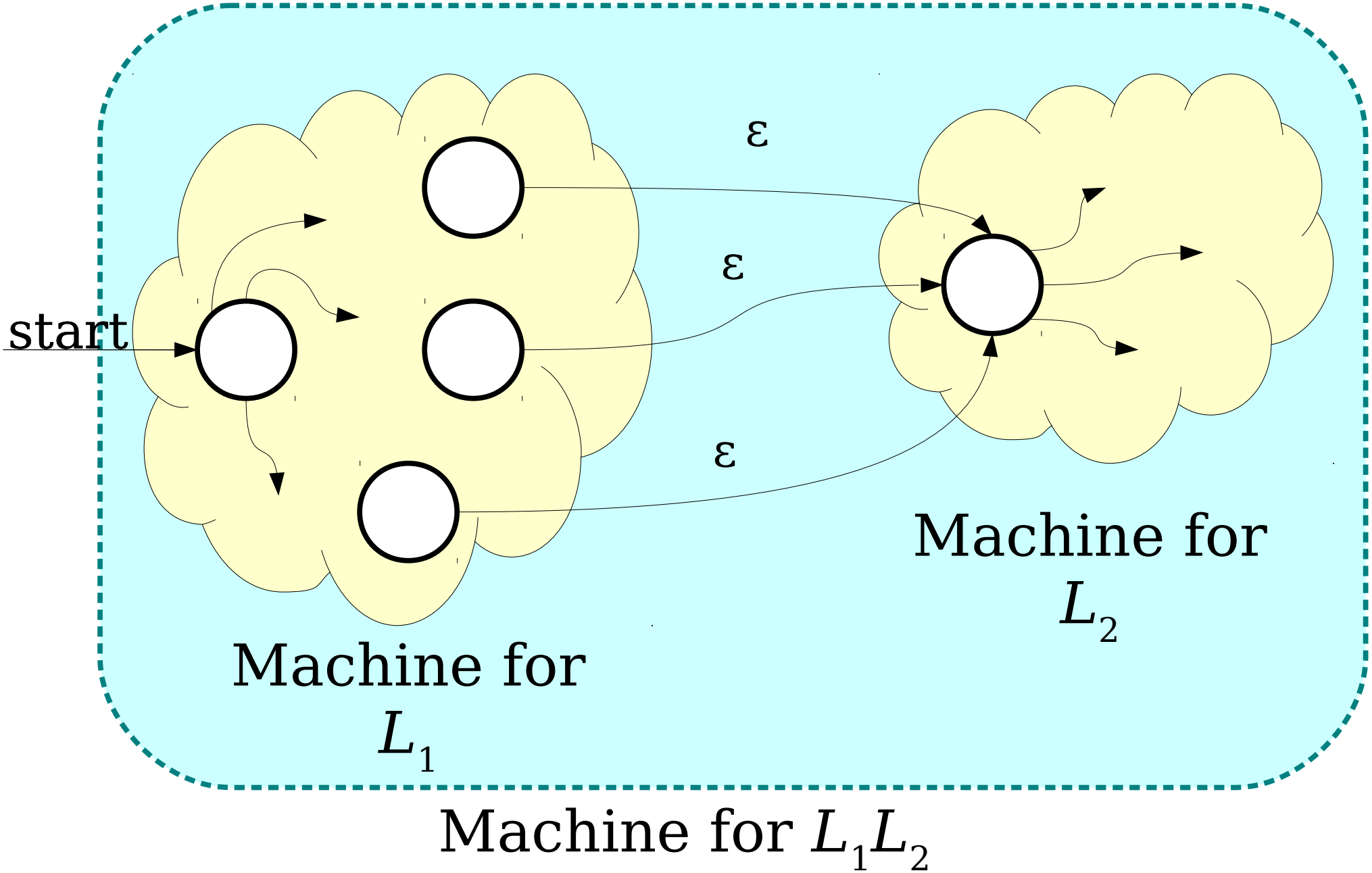

Lots and Lots of Concatenation

- Consider the language L = { **aa**, **b** }
- LL is the set of strings formed by concatenating pairs of strings in L.

  { **aaaa**, **aab**, **baa**, **bb** }

- LLL is the set of strings formed by concatenating triples of strings in L.

  { **aaaaaa**, **aaaab**, **aabaa**, **aabb**, **baaaa**, **baab**, **bbaa**, **bbb**}

- LLLL is the set of strings formed by concatenating quadruples of strings in L.

  { **aaaaaaaa**, **aaaaaab**, **aaaabaa**, **aaaabb**, **aabaaaa**, **aabaab**, **aabbaa**, **aabbb**, **baaaaaa**, **baaaab**, **baabaa**, **baabb**, **bbaaaa**, **bbaab**, **bbbaa**, **bbbb**}

Language Exponentiation

- We can define what it means to "exponentiate" a language as follows:
- $L^0 = \{\varepsilon\}$
  - The set containing just the empty string.
  - Idea: Any string formed by concatenating zero strings together is the empty string.
- $L^{n+1} = LL^n$
  - Idea: Concatenating $(n+1)$ strings together works by concatenating n strings, then concatenating one more.
- ***Question:*** Why define $L^0 = \{\varepsilon\}$?

The Kleene Closure

- An important operation on languages is the ***Kleene Closure***, which is defined as

$$L^* = \bigcup_{i=0}^{\infty} L^i$$

- Mathematically:

$$\boldsymbol{w \in L^*} \quad \textbf{iff} \quad \boldsymbol{\exists n \in \mathbb{N}.\ w \in L^n}$$

- Intuitively, all possible ways of concatenating any number of copies of strings in L together.

The Kleene Closure

If L = { **a**, **bb** }, then L^* = {

ε,

a, **bb**,

aa, **abb**, **bba**, **bbbb**,

aaa, **aabb**, **abba**, **abbbb**, **bbaa**, **bbabb**, **bbbba**, **bbbbbb**,

…

}

Reasoning about Infinity

- If L is regular, is L^* necessarily regular?
- **A Bad Line of Reasoning**:
  - $L^0 = \{ \varepsilon \}$ is regular.
  - $L^1 = L$ is regular.
  - $L^2 = LL$ is regular
  - $L^3 = L(LL)$ is regular
  - …
  - Regular languages are closed under union.
  - So the union of all these languages is regular.

Reasoning about Infinity

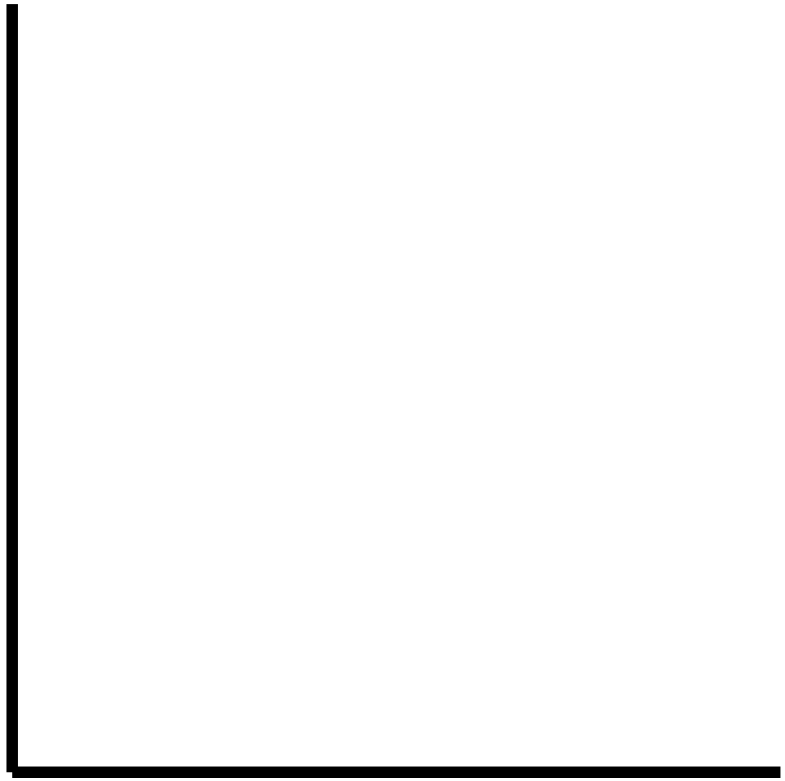

Reasoning about Infinity

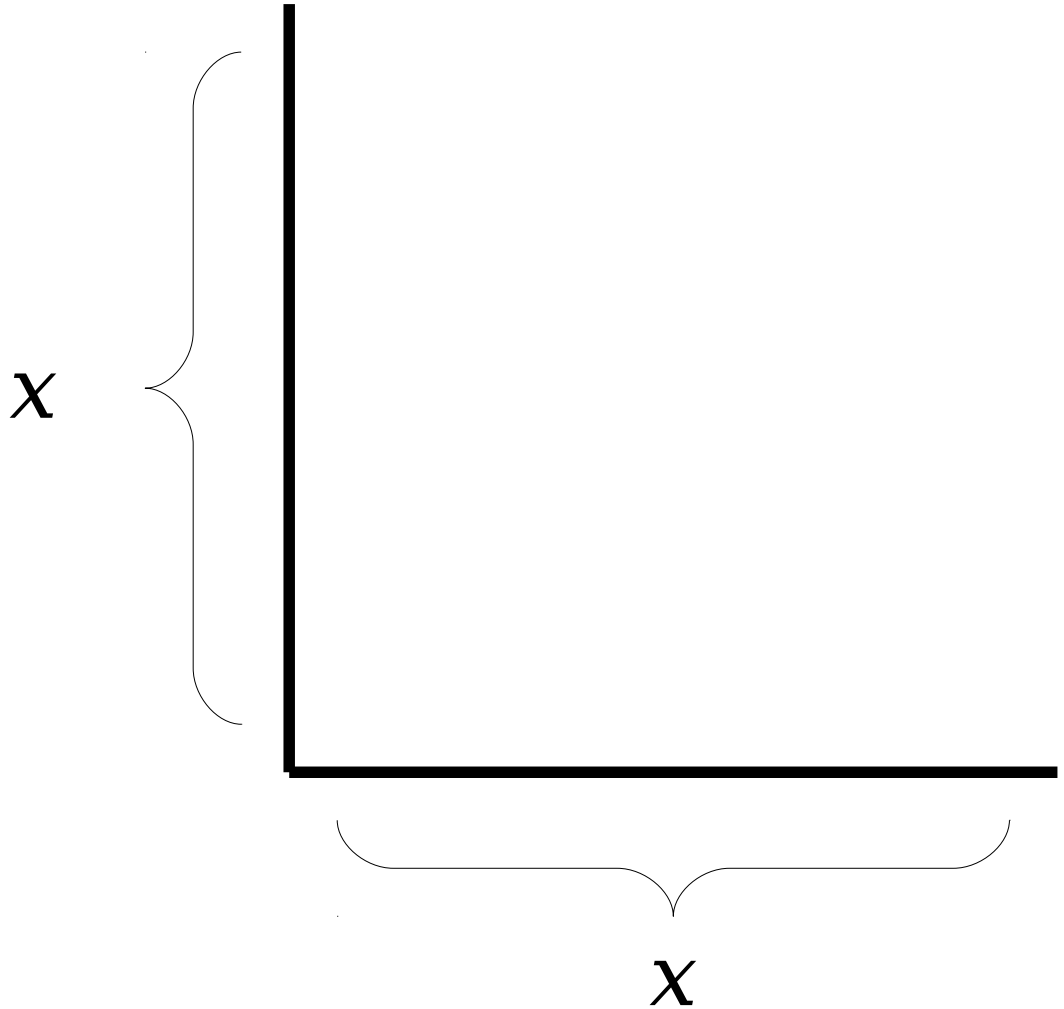

Reasoning about Infinity

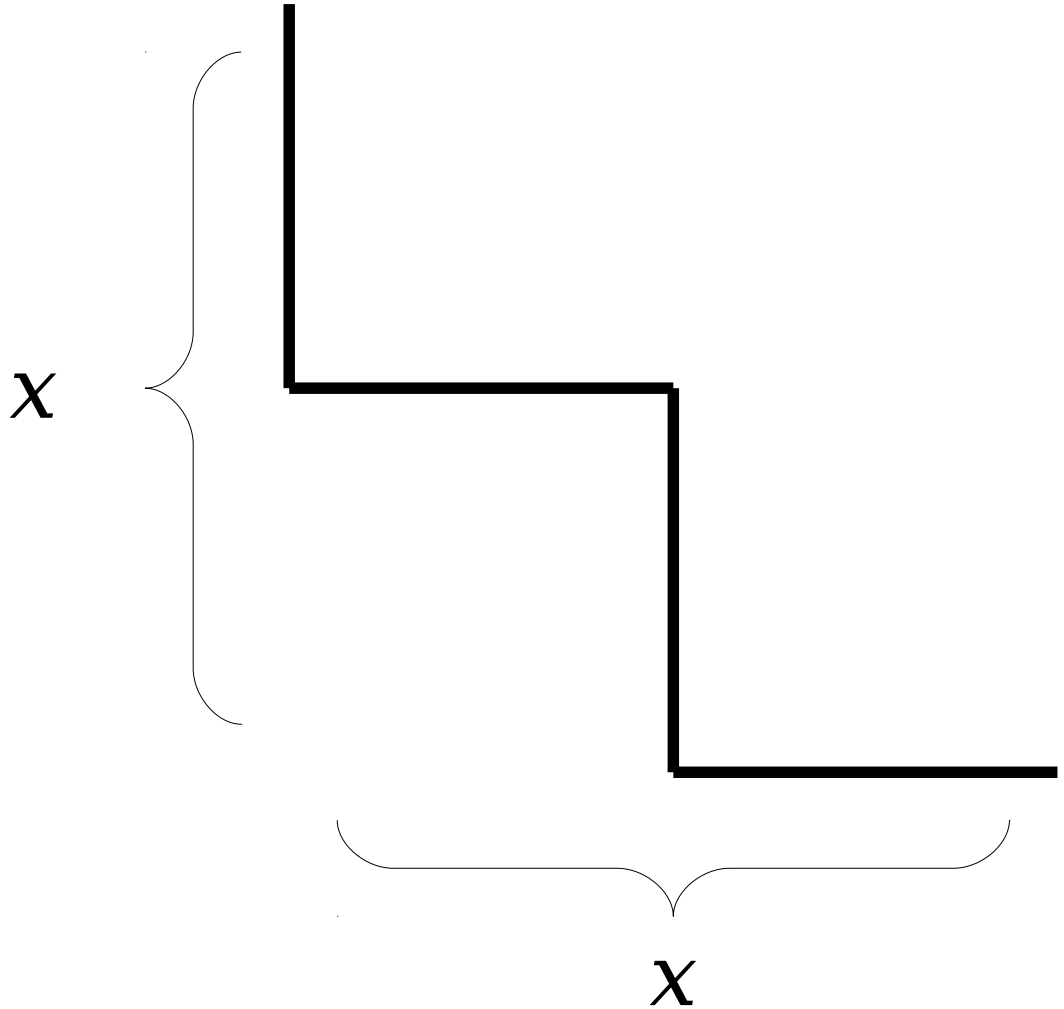

Reasoning about Infinity

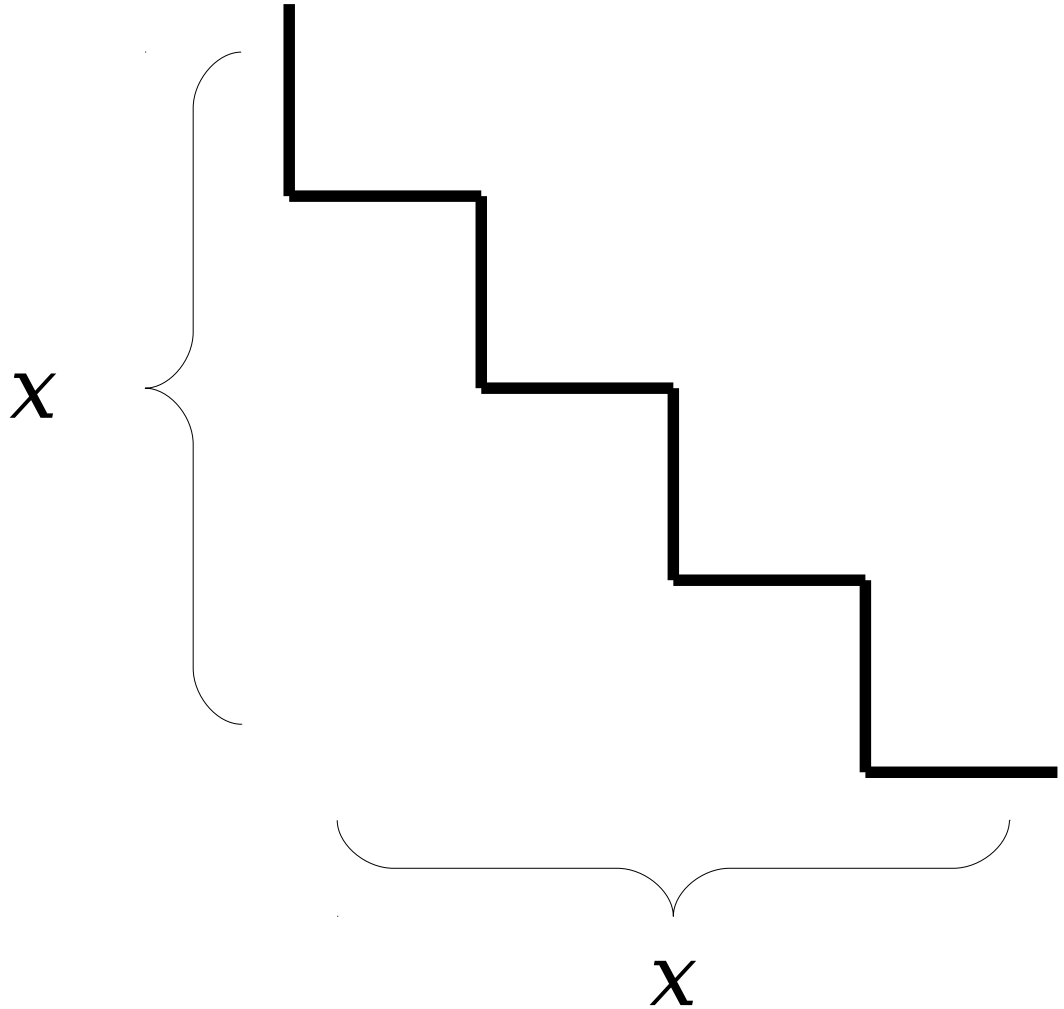

Reasoning about Infinity

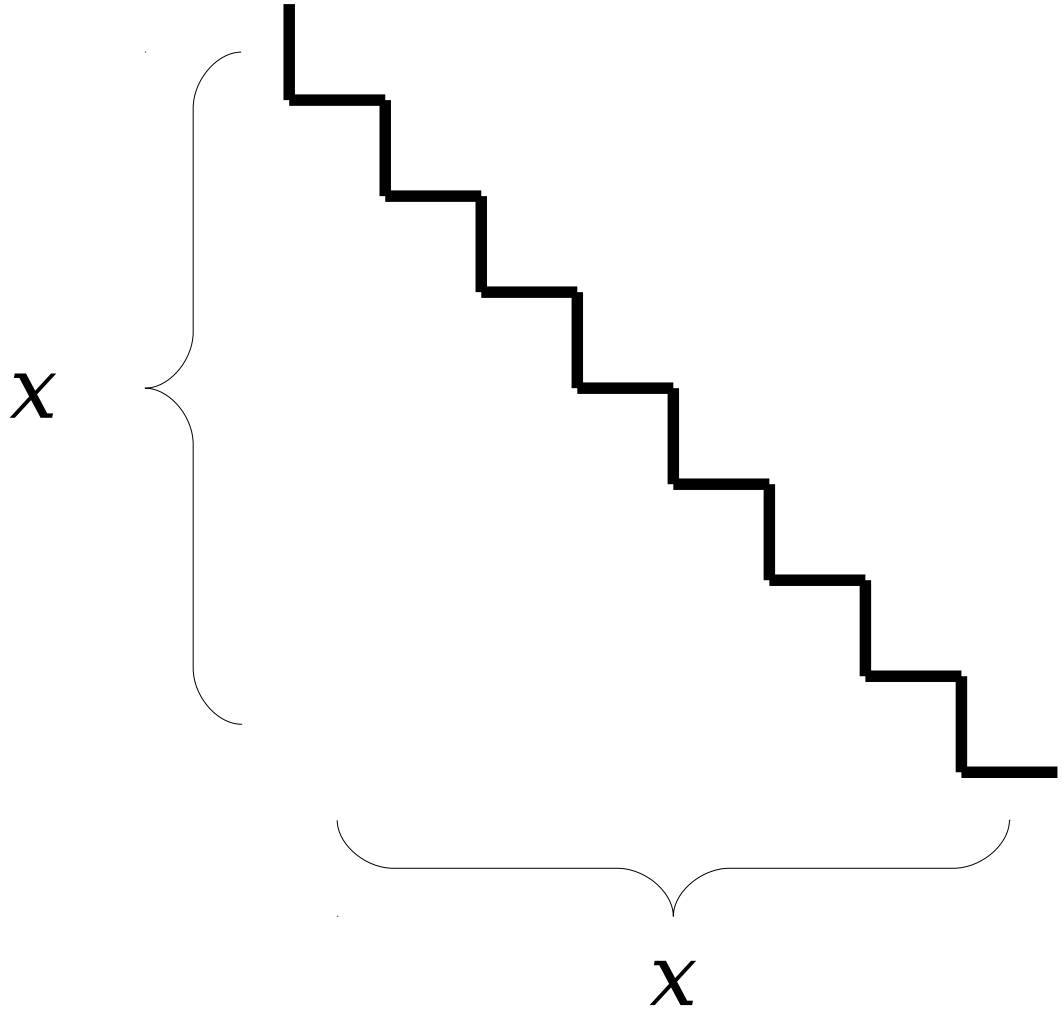

Reasoning about Infinity

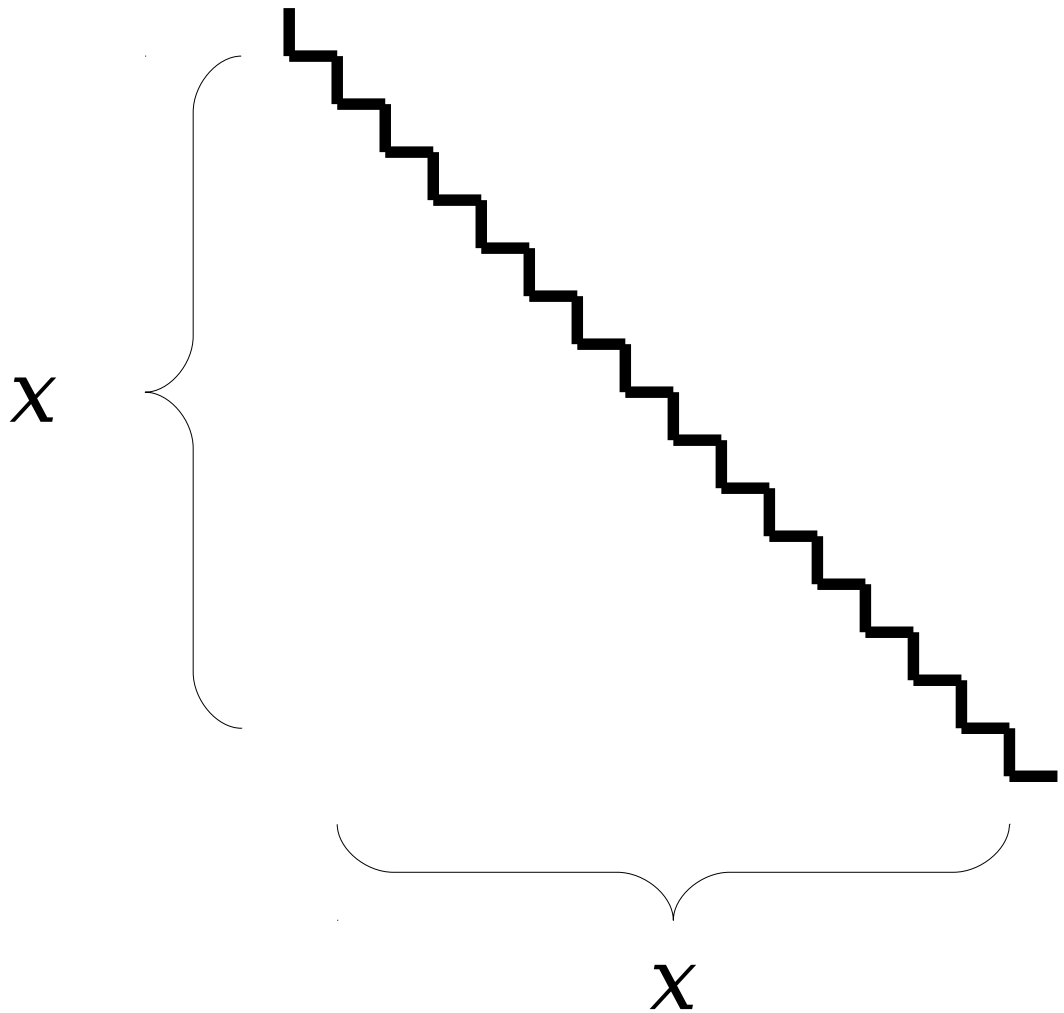

Reasoning about Infinity

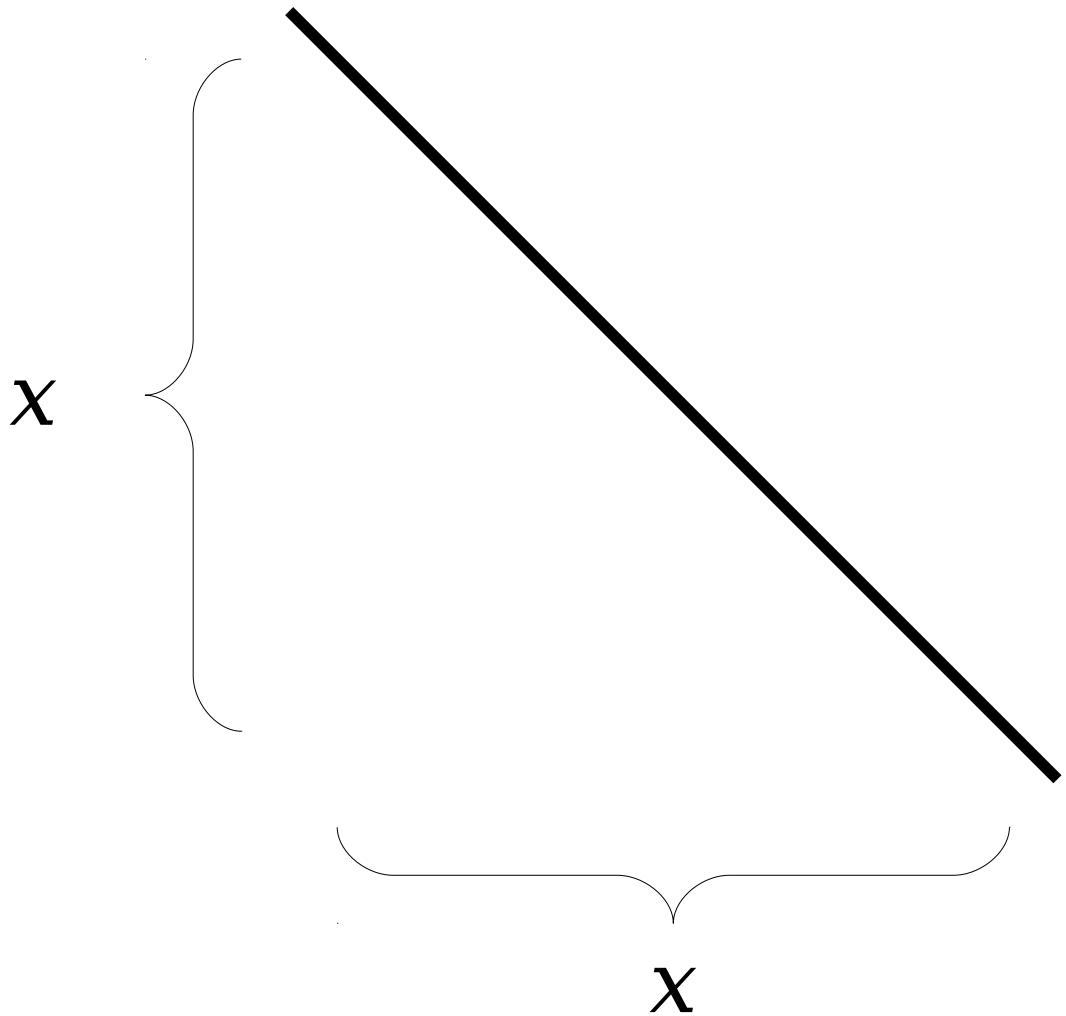

Reasoning about Infinity

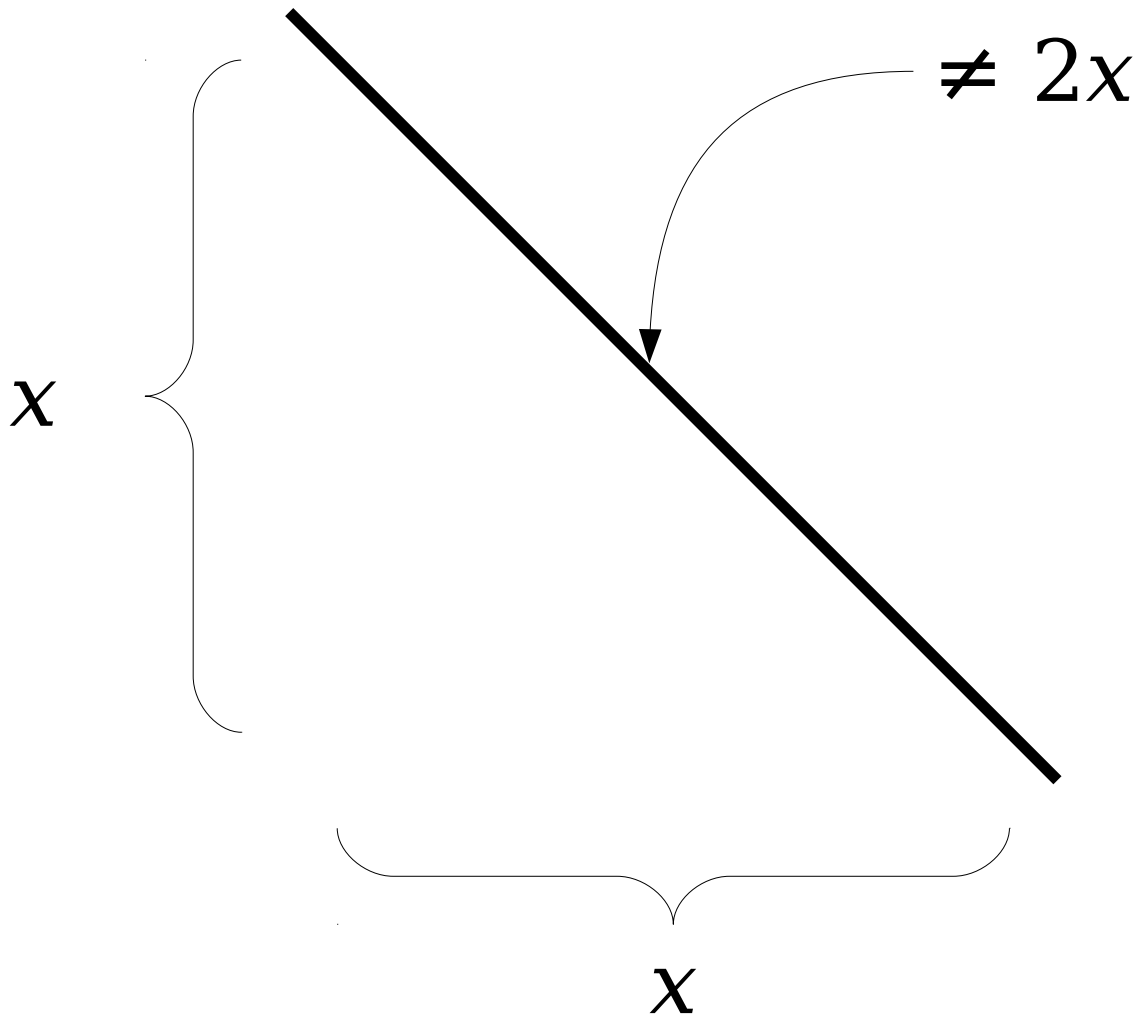

Reasoning about Infinity

$$0.9 < 1$$

Reasoning about Infinity

$$0.99 < 1$$

Reasoning about Infinity

$$0.999 < 1$$

Reasoning about Infinity

$$0.9999 < 1$$

Reasoning about Infinity

$$0.9999\overline{9} < 1$$

Reasoning about Infinity

$$0.9999\overline{9} \not< 1$$

Reasoning about Infinity

0 is finite

Reasoning about Infinity

1 is finite

Reasoning about Infinity

2 is finite

Reasoning about Infinity

3 is finite

Reasoning about Infinity

4 is finite

Reasoning about Infinity

∞ is finite

Reasoning about Infinity

∞ is finite

^ not

Reasoning About the Infinite

- If a series of finite objects all have some property, the “limit” of that process *does not* necessarily have that property.
- In general, it is not safe to conclude that some property that always holds in the finite case must hold in the infinite case.
  - (This is why calculus is interesting).

Idea: Can we directly convert an NFA for language L to an NFA for language L^*?

The Kleene Star

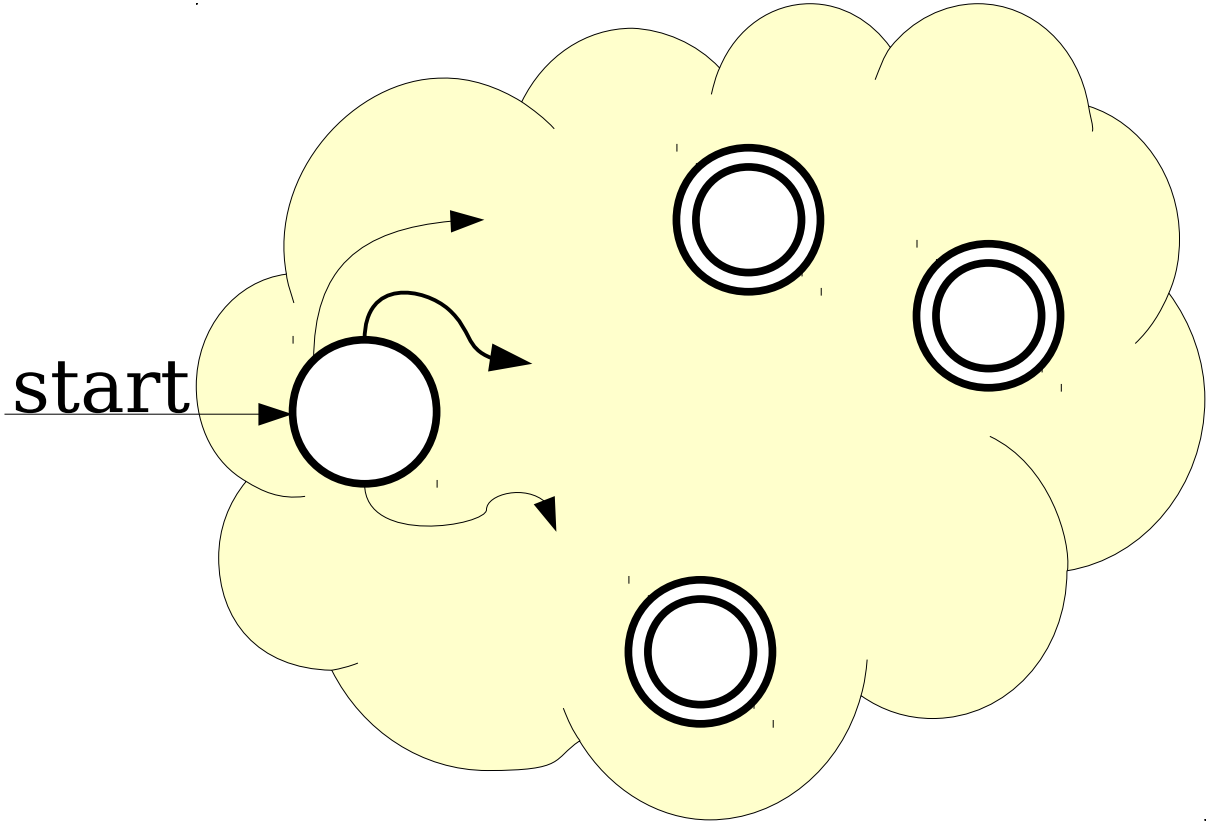

Machine for L

The Kleene Star

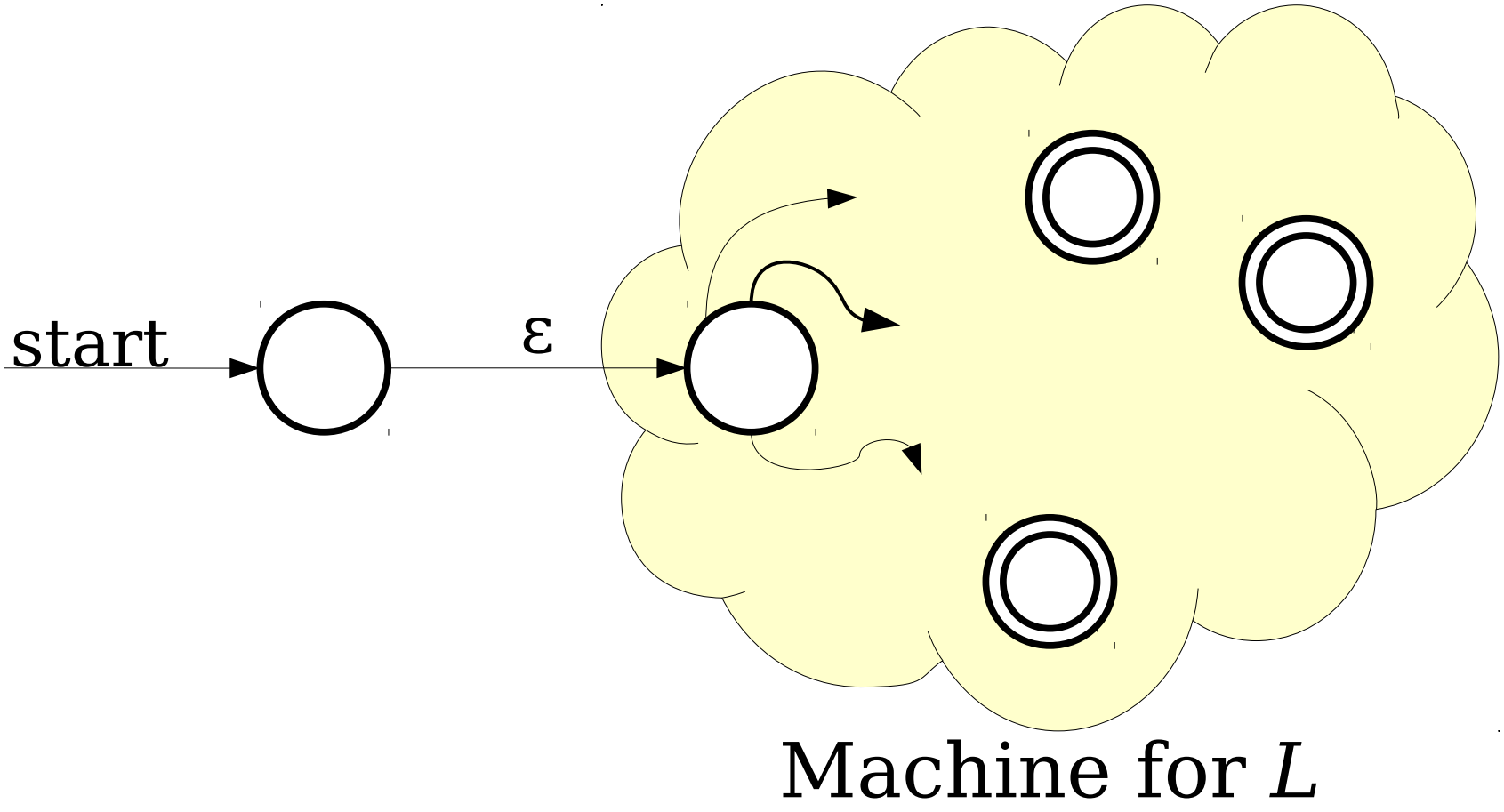

The Kleene Star

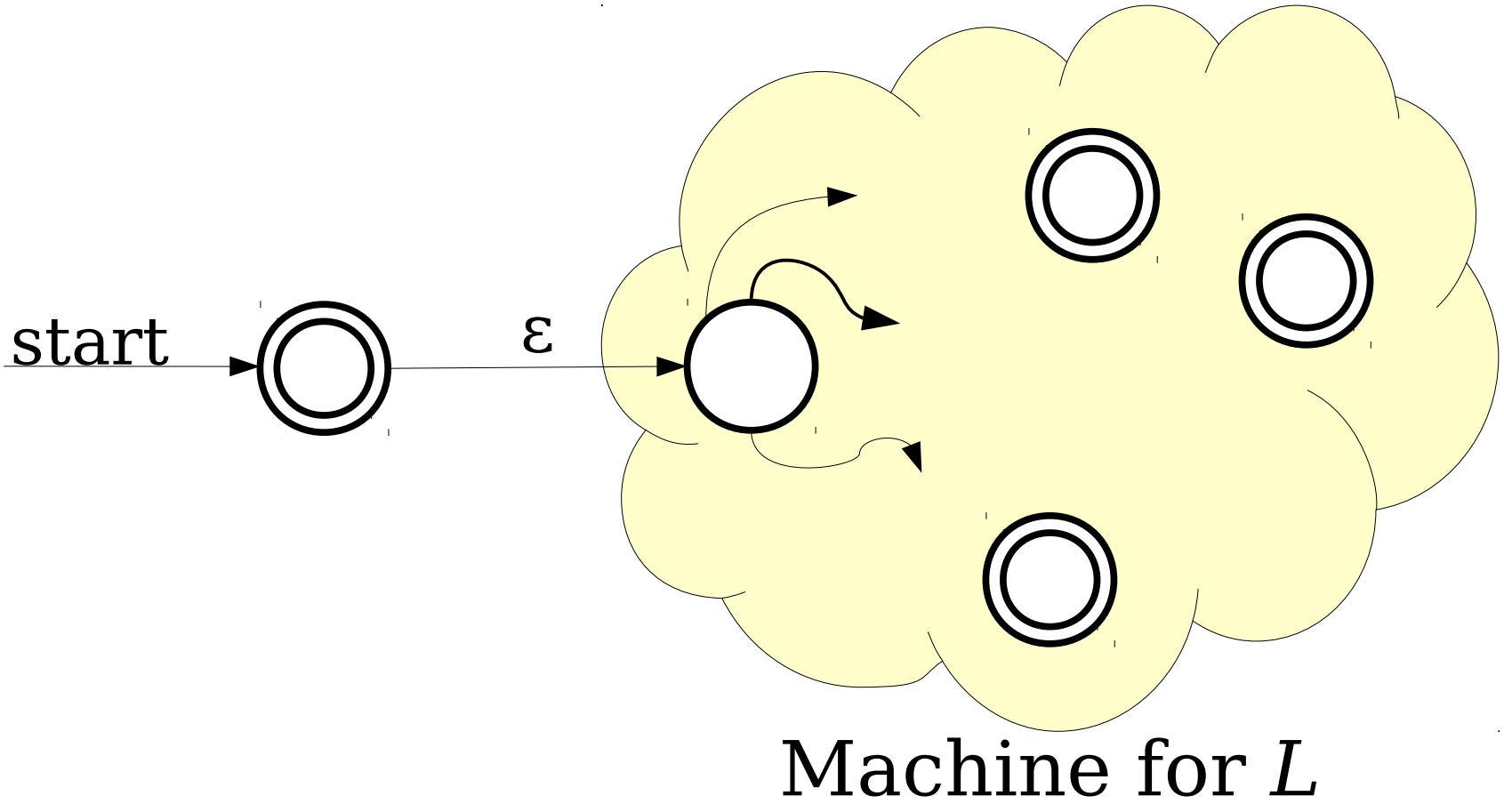

The Kleene Star

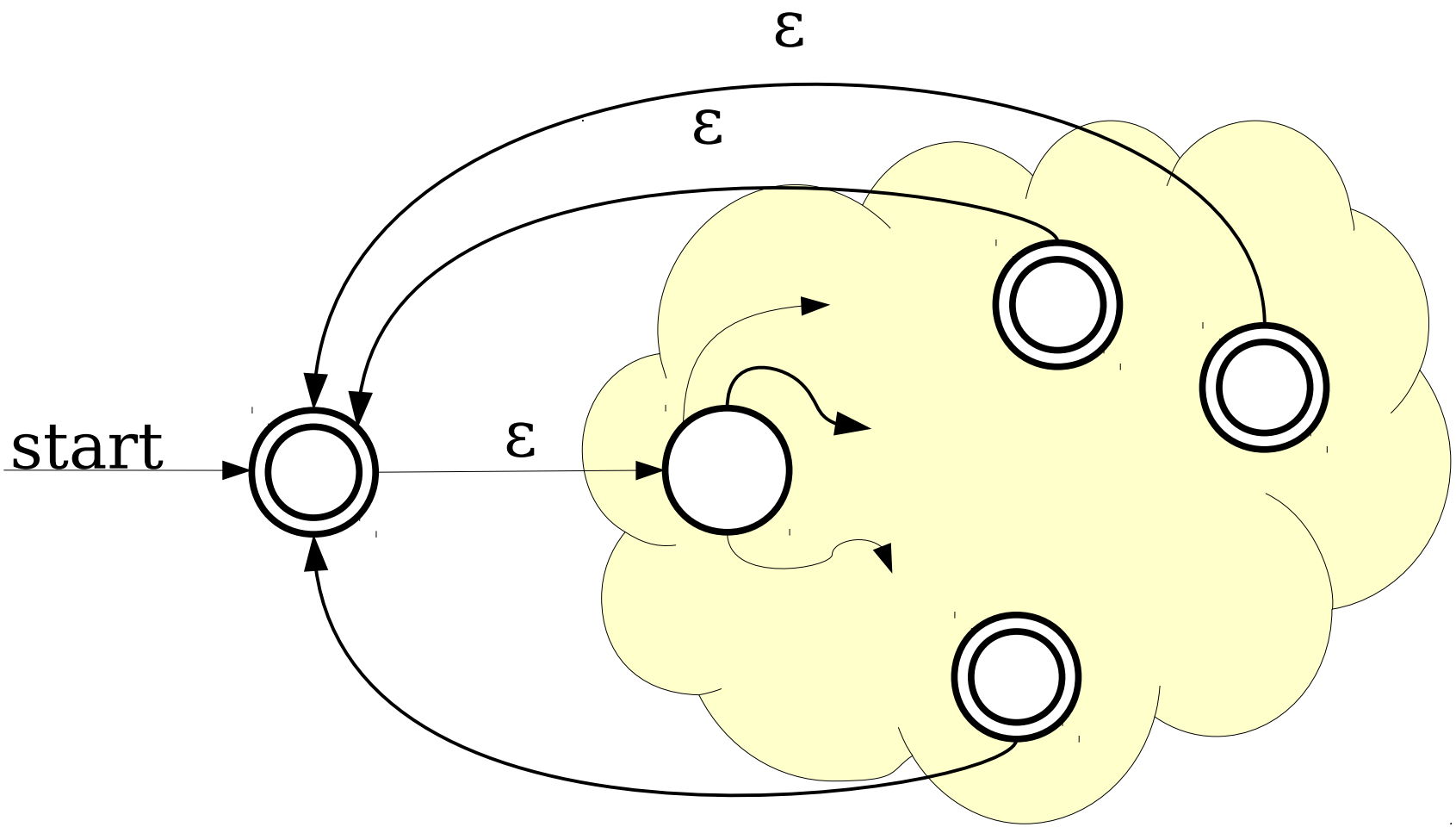

Machine for L

The Kleene Star

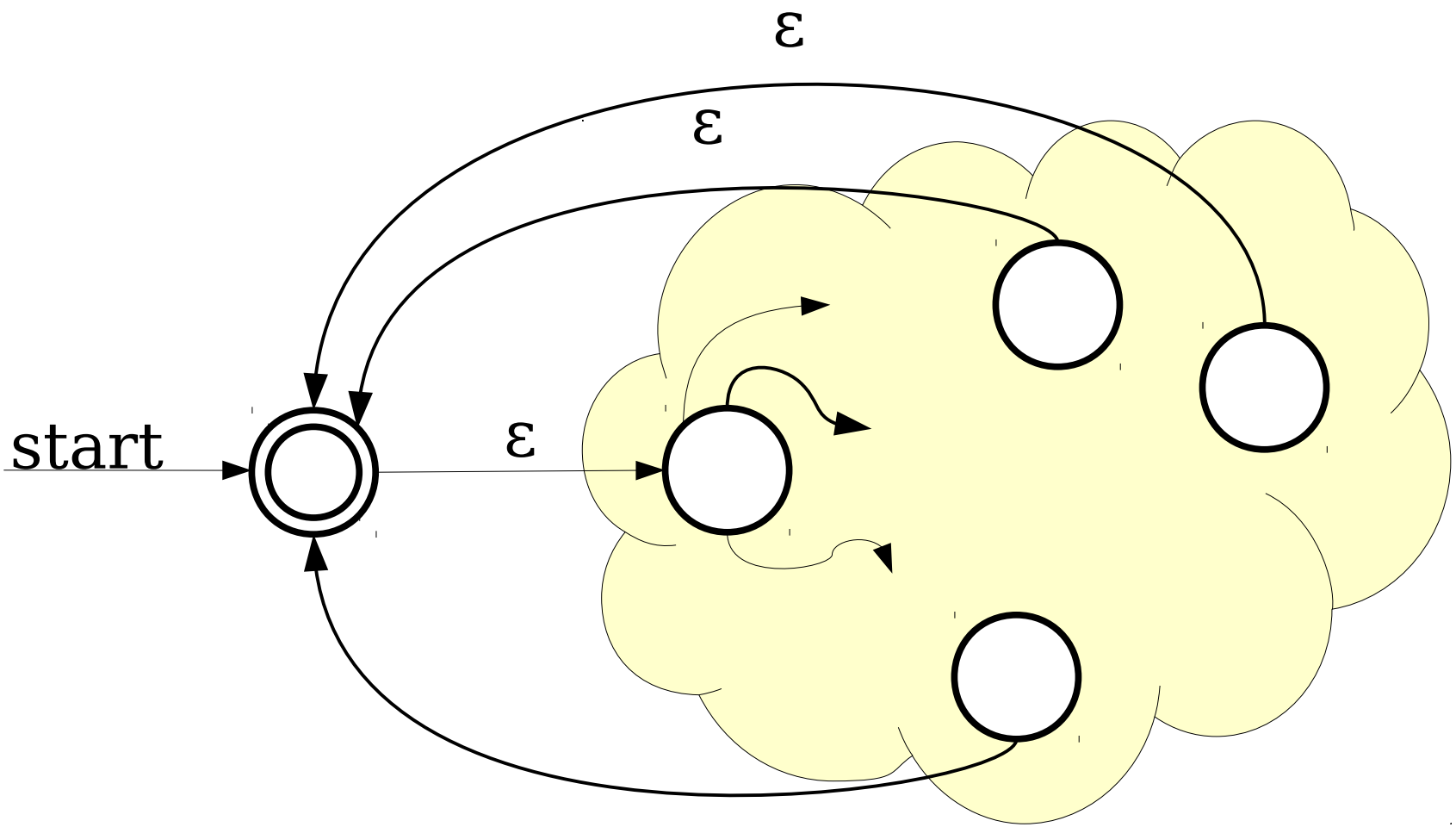

Machine for L

The Kleene Star

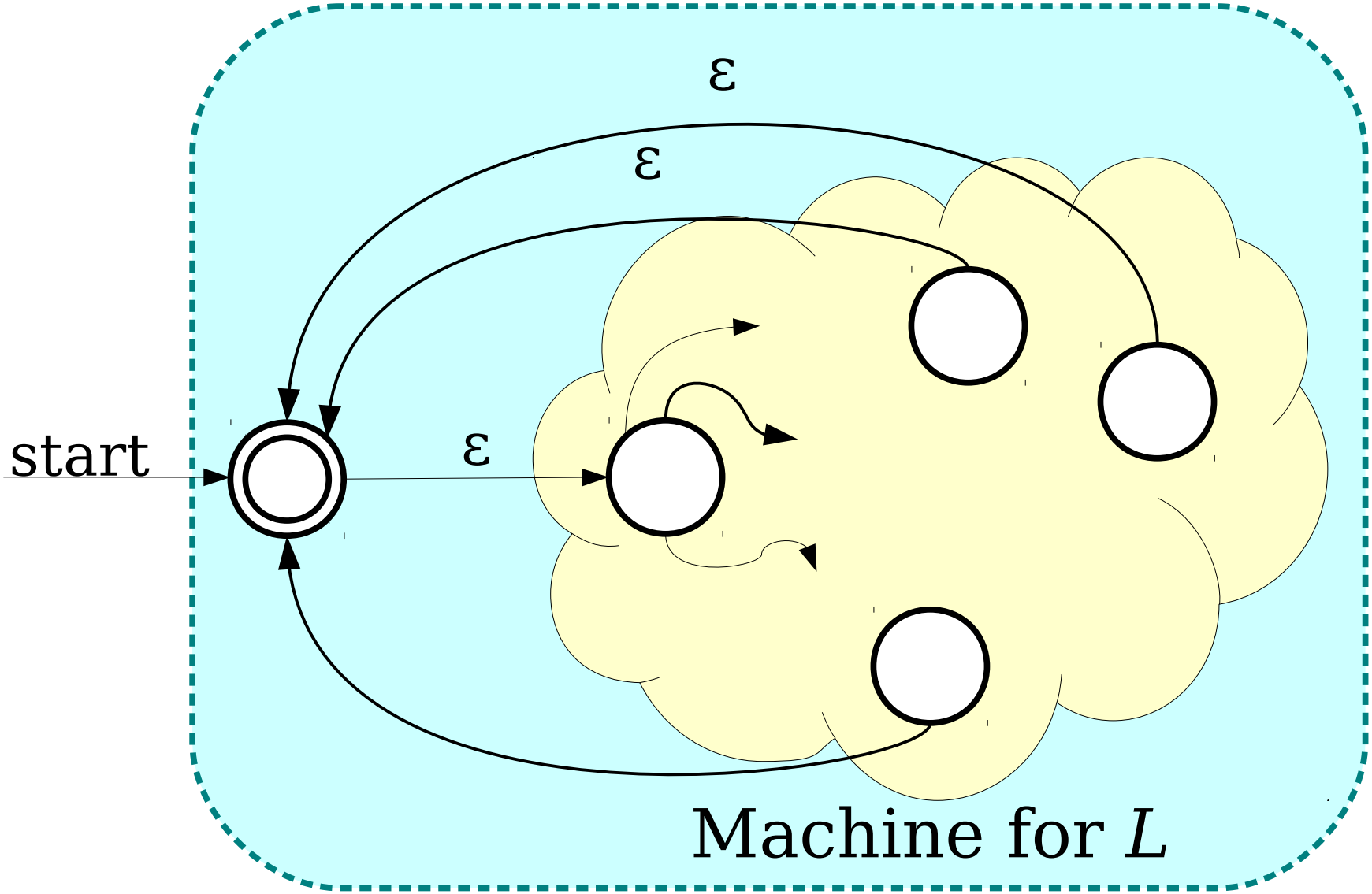

Machine for L^*

The Kleene Star

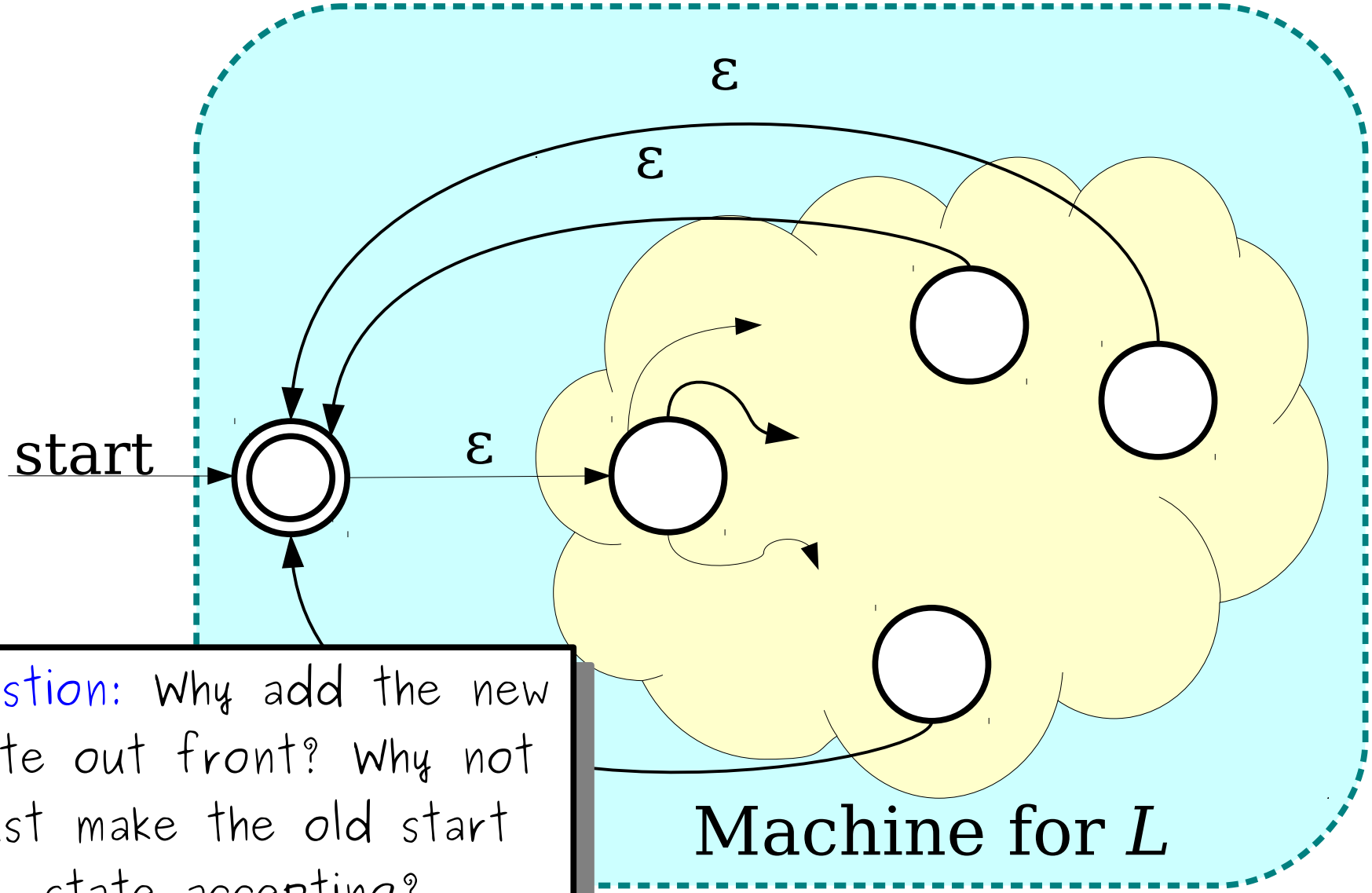

Question: Why add the new state out front? Why not just make the old start state accepting?

Machine for L^*

Summary

- NFAs are a powerful type of automaton that allows for ***nondeterministic*** choices.
- NFAs can also have ***ε-transitions*** that move from state to state without consuming any input.
- The ***subset construction*** shows that NFAs are not more powerful than DFAs, because any NFA can be converted into a DFA that accepts the same language.
- The union, intersection, complement, concatenation, and Kleene closure of regular languages are all regular languages.