Turing Machines

Part One

What problems can we solve with a computer?

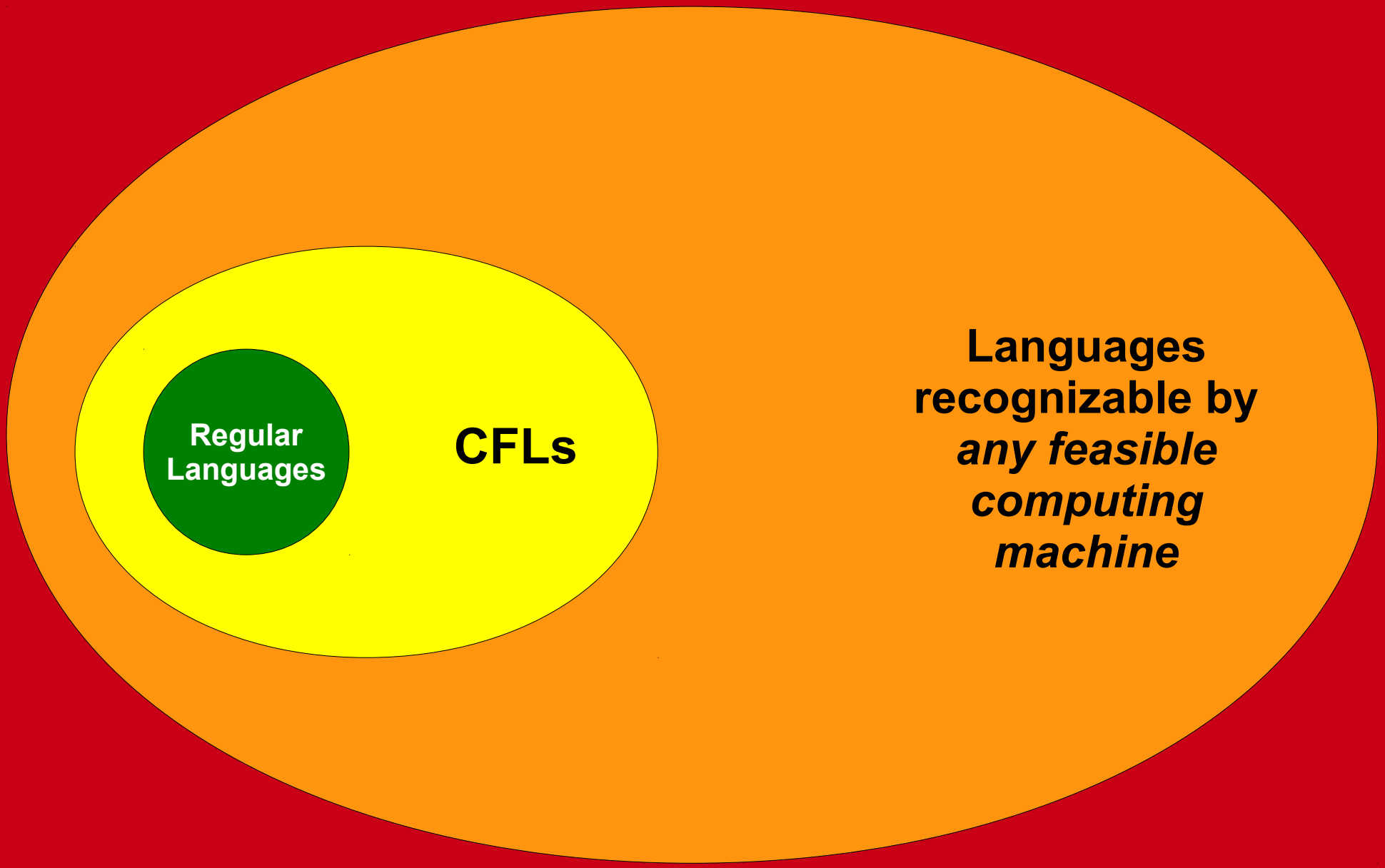

All Languages

That same drawing, to scale.

All Languages

The Problem

- Finite automata accept precisely the regular languages.
- We may need unbounded memory to recognize context-free languages.
  - e.g. $\{ \mathtt{a}^n\mathtt{b}^n \mid n \in \mathbb{N} \}$ requires unbounded counting.
- How do we build an automaton with finitely many states but unbounded memory?

A Brief History Lesson

A Better Memory Device

- A ***Turing machine*** is a deterministic finite automaton equipped with an ***infinite tape*** as its memory.
- The input is written on the tape when the computation begins, surrounded by infinitely many blank cells.
- Each transition depends on the current symbol under the tape head.

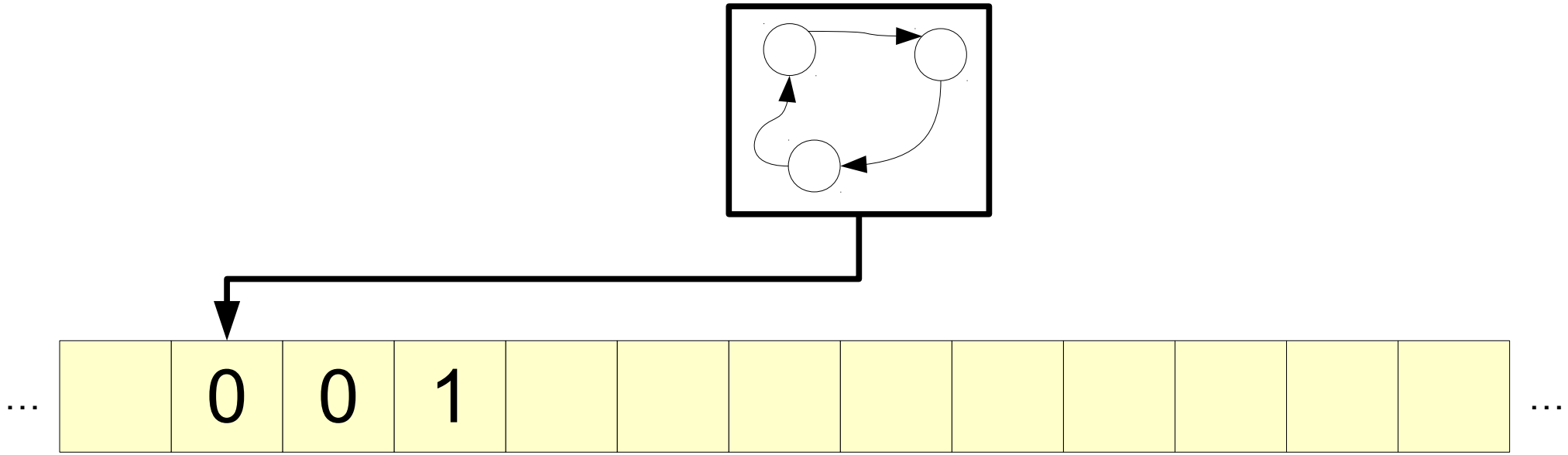

A Better Memory Device

- A ***Turing machine*** is a deterministic finite automaton equipped with an ***infinite tape*** as its memory.
- The input is written on the tape when the computation begins, surrounded by infinitely many blank cells.
- Each transition depends on the current symbol under the tape head.

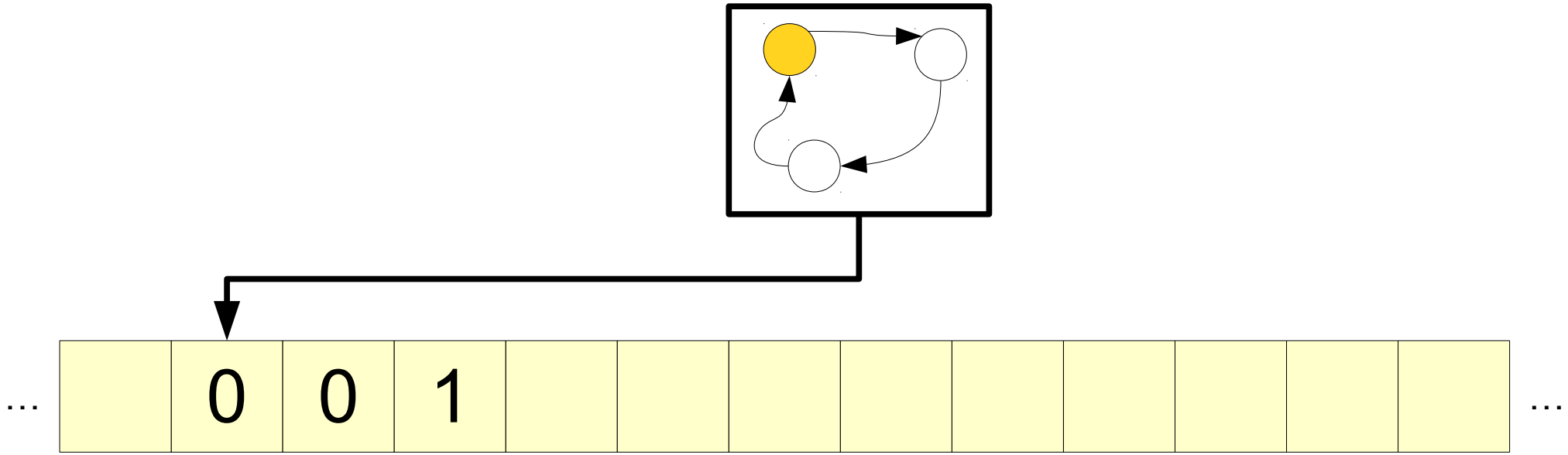

A Better Memory Device

- A ***Turing machine*** is a deterministic finite automaton equipped with an ***infinite tape*** as its memory.
- The input is written on the tape when the computation begins, surrounded by infinitely many blank cells.
- Each transition depends on the current symbol under the tape head.

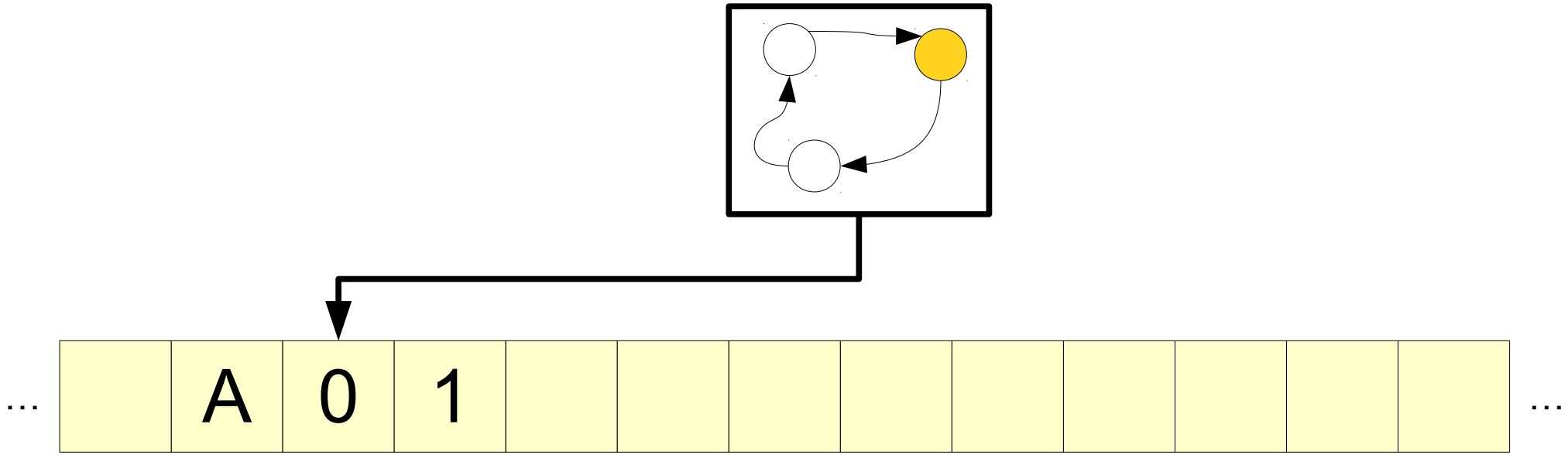

A Better Memory Device

- A ***Turing machine*** is a deterministic finite automaton equipped with an ***infinite tape*** as its memory.
- The input is written on the tape when the computation begins, surrounded by infinitely many blank cells.
- Each transition depends on the current symbol under the tape head.

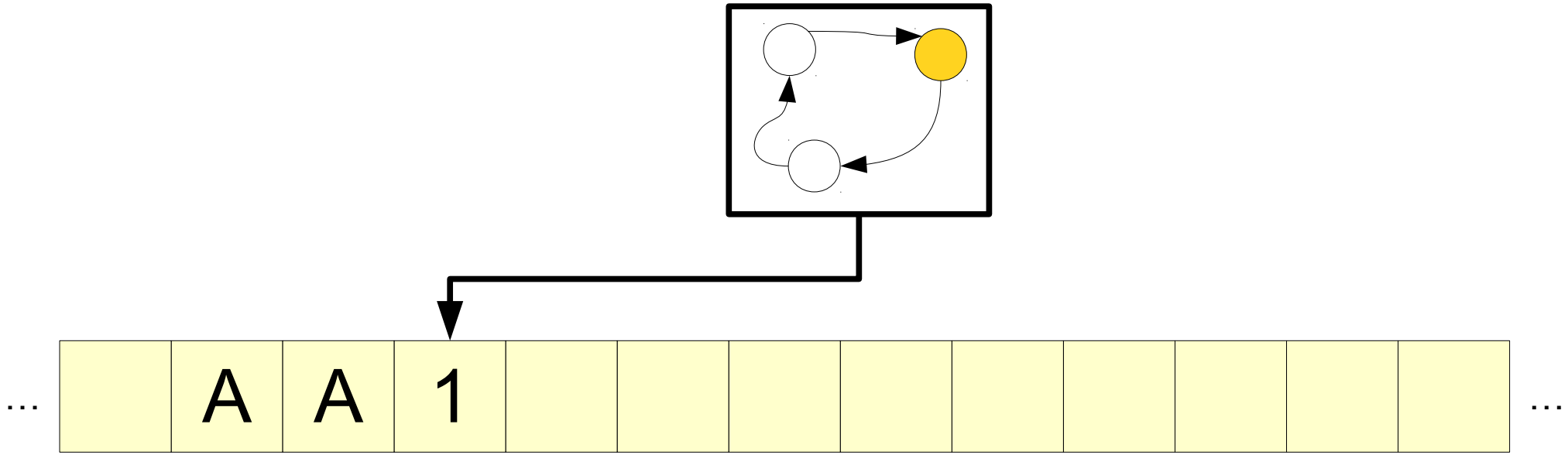

A Better Memory Device

- A ***Turing machine*** is a deterministic finite automaton equipped with an ***infinite tape*** as its memory.
- The input is written on the tape when the computation begins, surrounded by infinitely many blank cells.
- Each transition depends on the current symbol under the tape head.

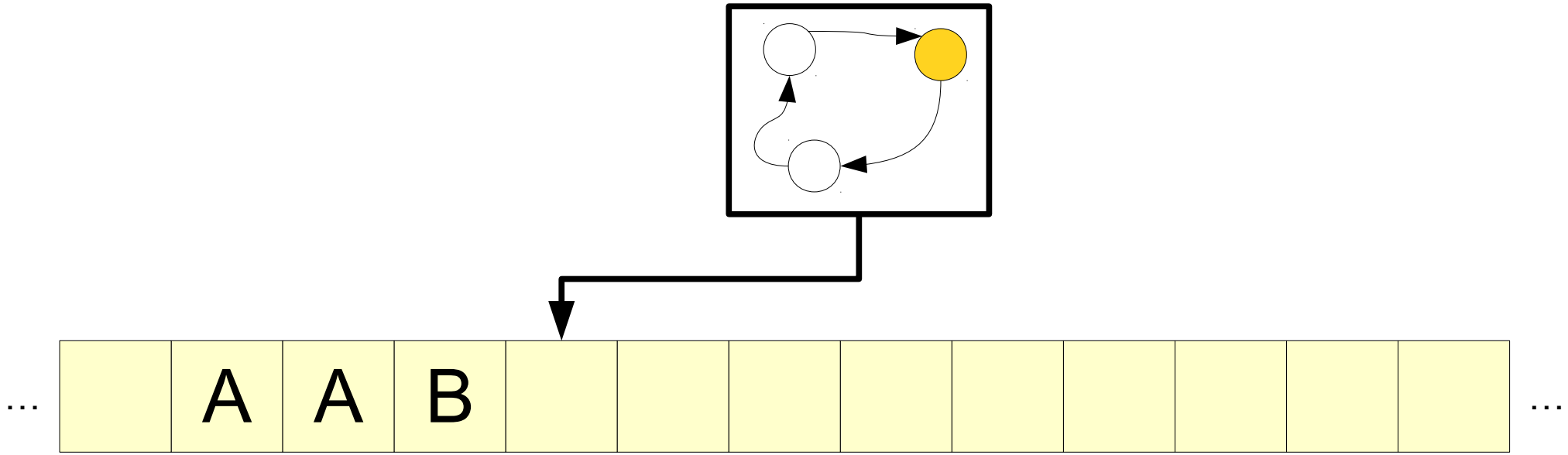

A Better Memory Device

- A ***Turing machine*** is a deterministic finite automaton equipped with an ***infinite tape*** as its memory.
- The input is written on the tape when the computation begins, surrounded by infinitely many blank cells.
- Each transition depends on the current symbol under the tape head.

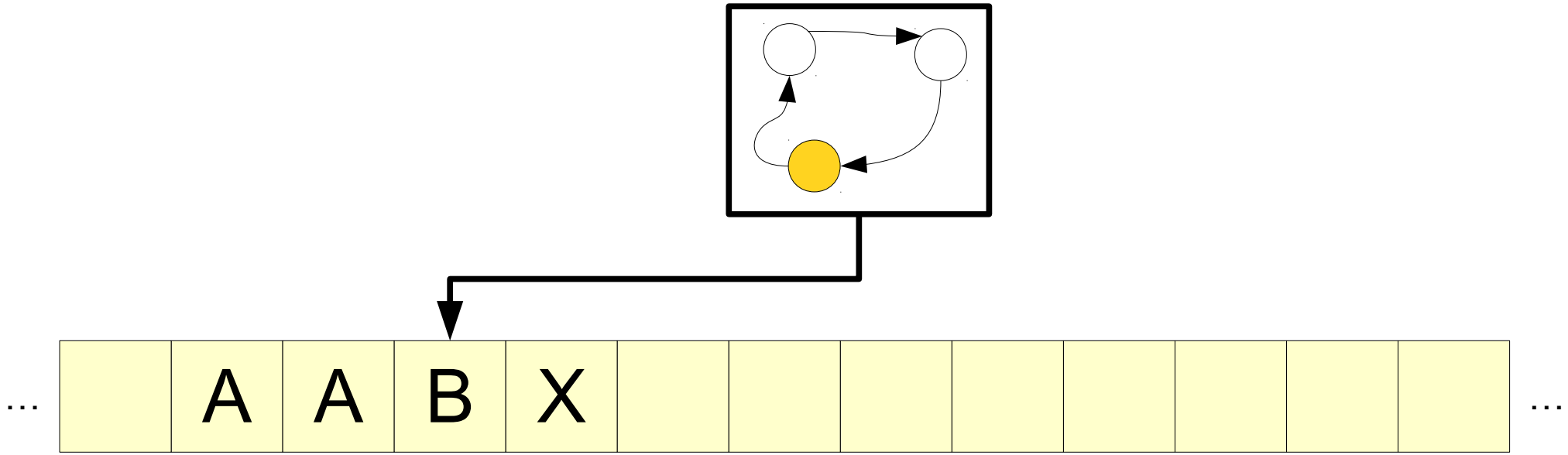

A Better Memory Device

- A ***Turing machine*** is a deterministic finite automaton equipped with an ***infinite tape*** as its memory.
- The input is written on the tape when the computation begins, surrounded by infinitely many blank cells.
- Each transition depends on the current symbol under the tape head.

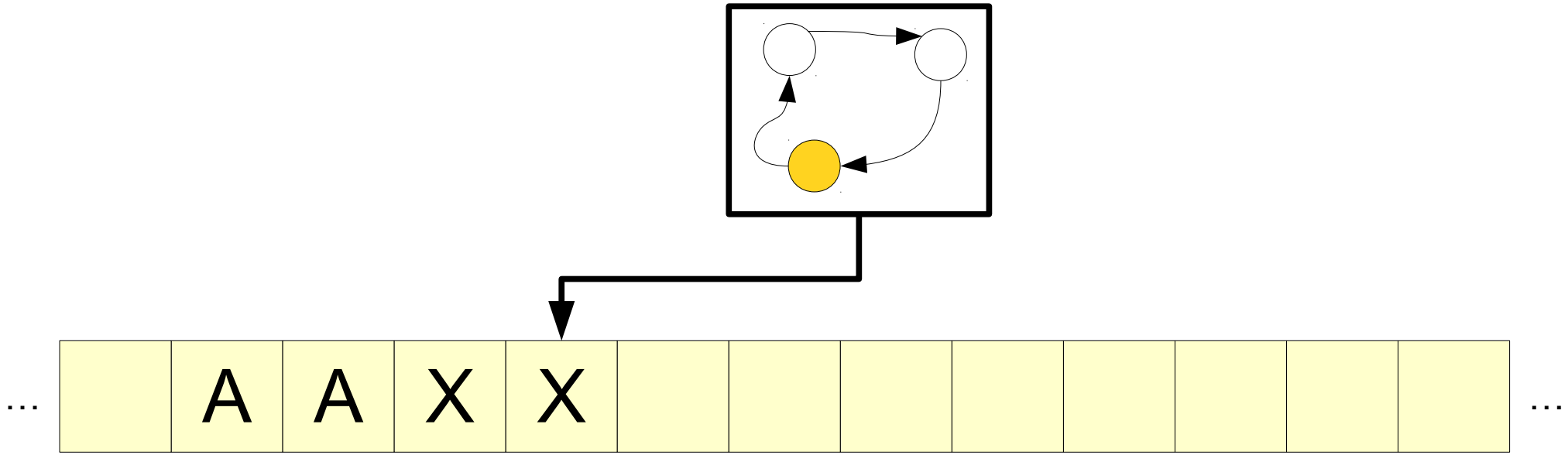

A Better Memory Device

- A ***Turing machine*** is a deterministic finite automaton equipped with an ***infinite tape*** as its memory.
- The input is written on the tape when the computation begins, surrounded by infinitely many blank cells.
- Each transition depends on the current symbol under the tape head.

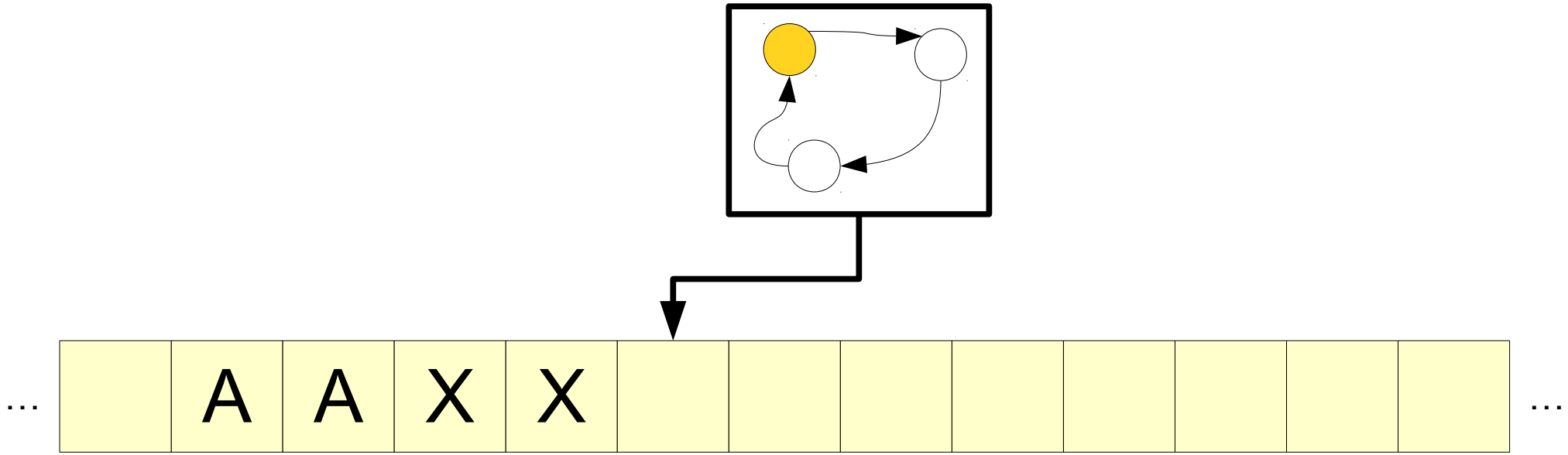

A Better Memory Device

- A ***Turing machine*** is a deterministic finite automaton equipped with an ***infinite tape*** as its memory.
- The input is written on the tape when the computation begins, surrounded by infinitely many blank cells.
- Each transition depends on the current symbol under the tape head.

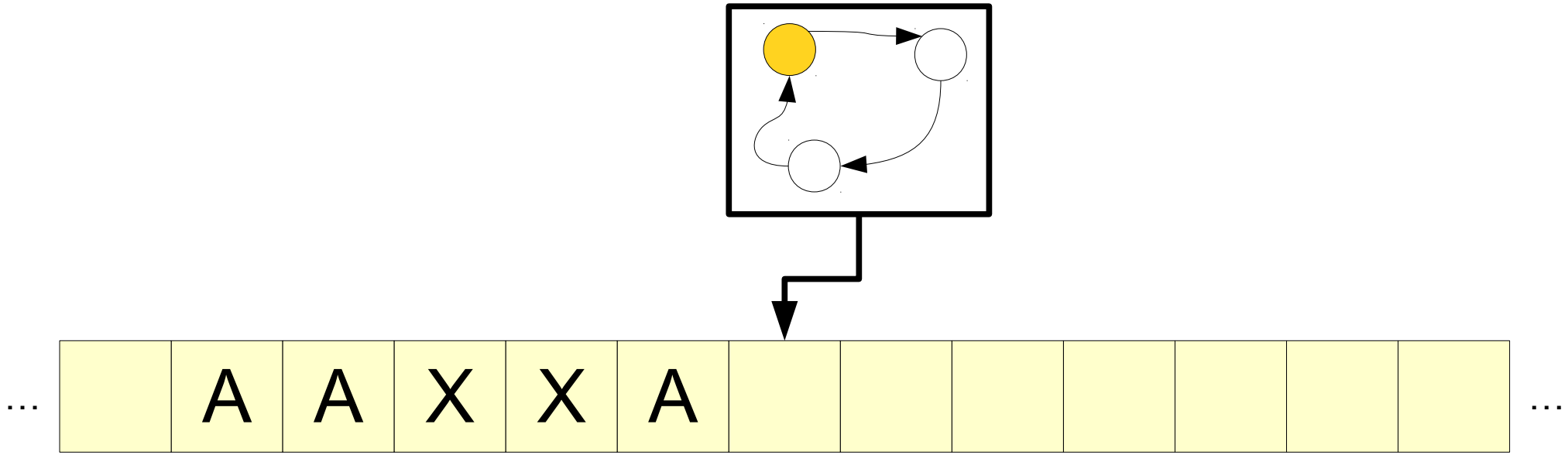

A Better Memory Device

- A ***Turing machine*** is a deterministic finite automaton equipped with an ***infinite tape*** as its memory.
- The input is written on the tape when the computation begins, surrounded by infinitely many blank cells.
- Each transition depends on the current symbol under the tape head.

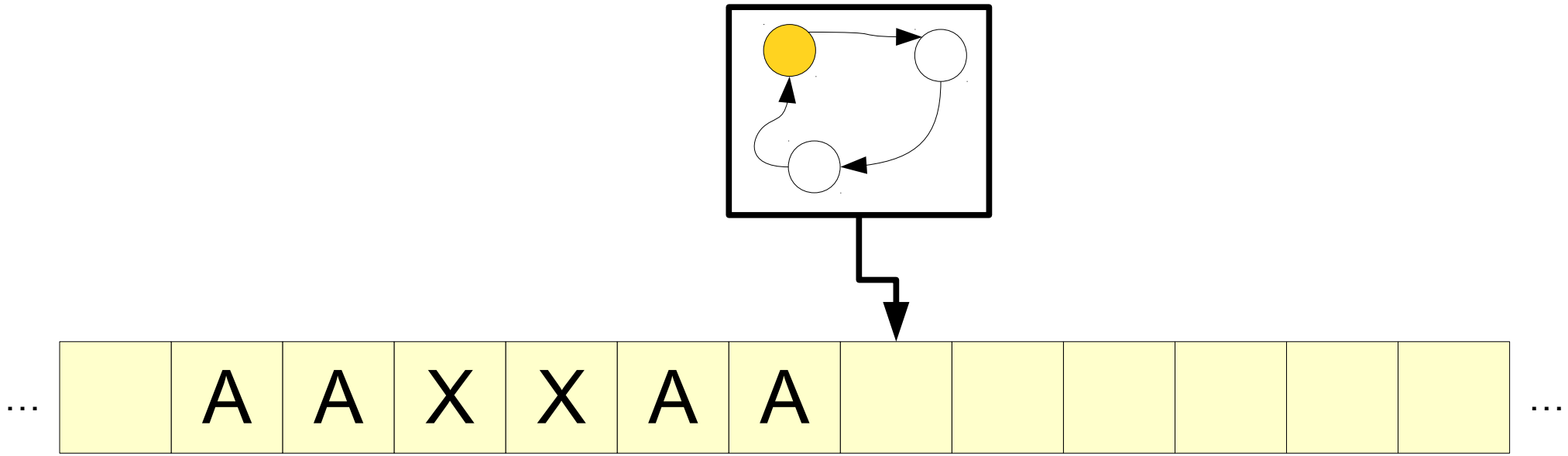

A Better Memory Device

- A ***Turing machine*** is a deterministic finite automaton equipped with an ***infinite tape*** as its memory.
- The input is written on the tape when the computation begins, surrounded by infinitely many blank cells.
- Each transition depends on the current symbol under the tape head.

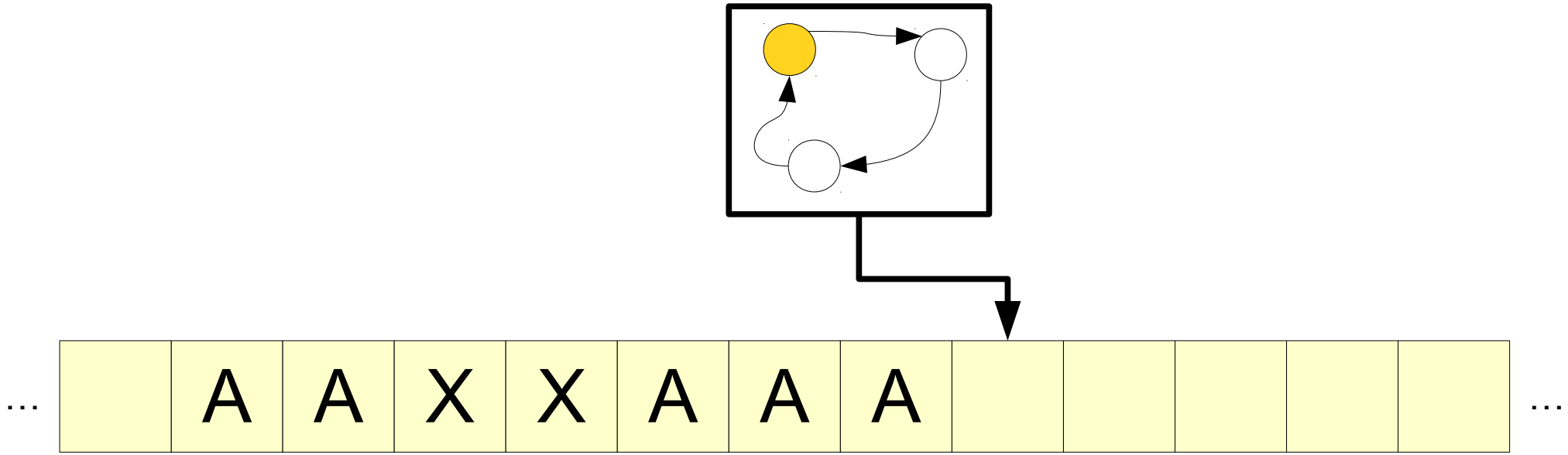

The Turing Machine

- A Turing machine consists of three parts:
  - A ***finite-state control*** that issues commands,
  - an ***infinite tape*** for input and scratch space, and
  - a ***tape head*** that can read and write a single tape cell.
- At each step, the Turing machine
  - writes a symbol to the tape cell under the tape head,
  - changes state, and
  - moves the tape head to the left or to the right.

Input and Tape Alphabets

- A Turing machine has two alphabets:
  - An ***input alphabet*** Σ. All input strings are written in the input alphabet.
  - A ***tape alphabet*** Γ, where $\Sigma \subseteq \Gamma$. The tape alphabet contains all symbols that can be written onto the tape.
- The tape alphabet Γ can contain any number of symbols, but always contains at least one ***blank symbol***, denoted $\square$. You are guaranteed $\square \notin \Sigma$.
- At startup, the Turing machine begins with an infinite tape of $\square$ symbols with the input written at some location. The tape head is positioned at the start of the input.

A Simple Turing Machine

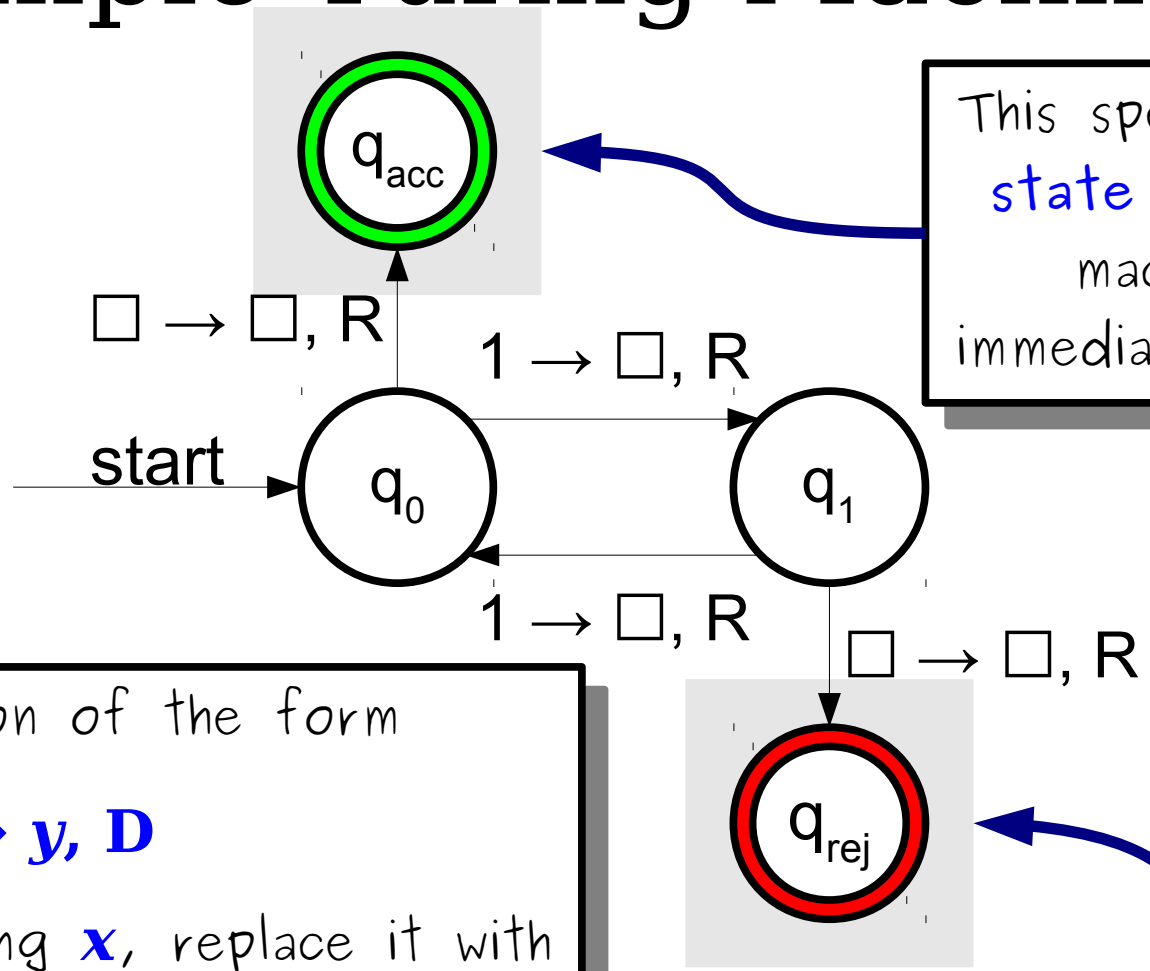

This special **accept state** causes the machine to immediately accept.

Each transition of the form

$$x \rightarrow y, D$$

means "upon reading x, replace it with symbol y and move the tape head in direction D (which is either **L** or **R**). The symbol □ represents the **blank symbol**.

This special **reject state** causes the machine to immediately reject.

A Simple Turing Machine

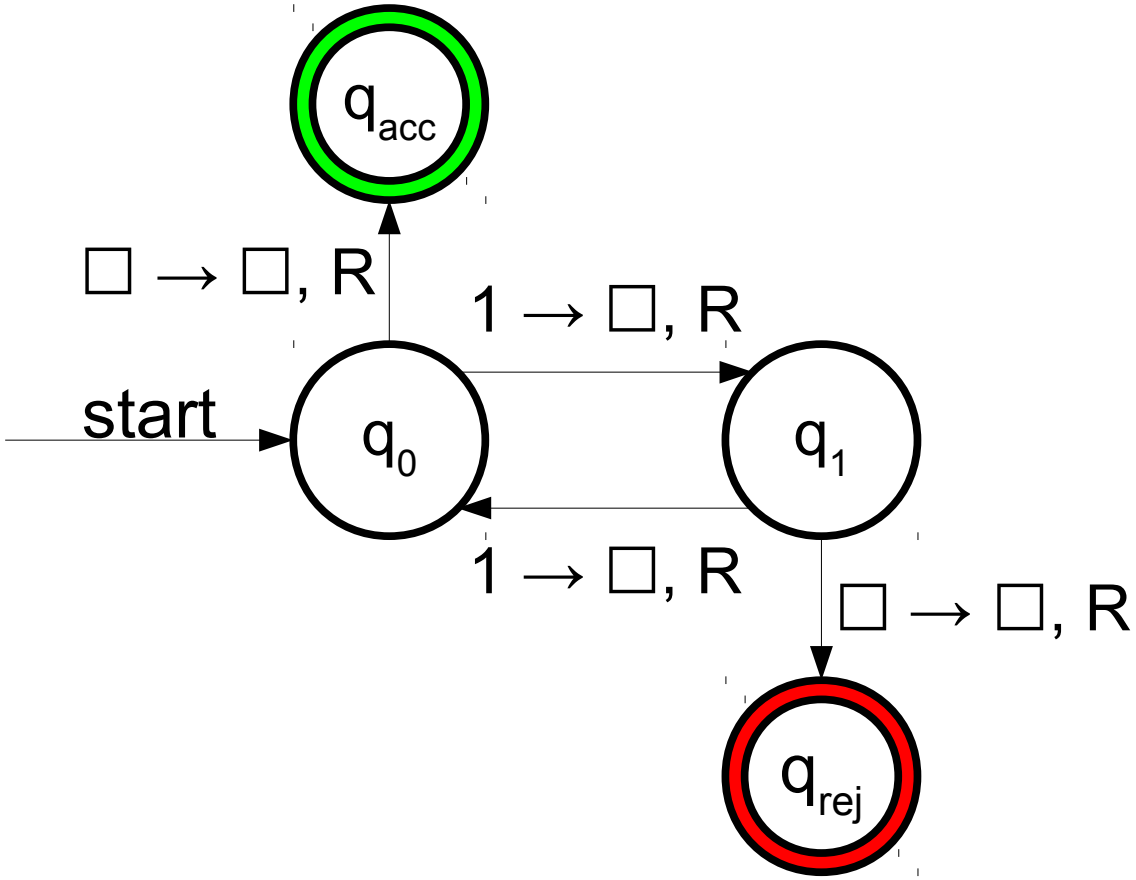

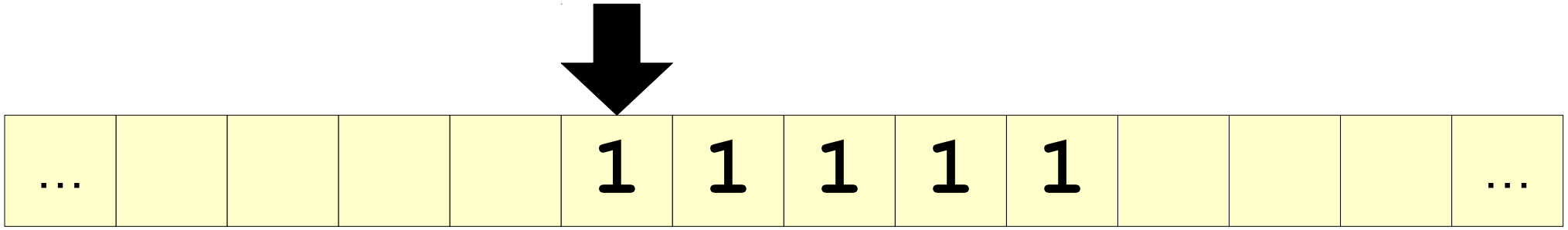

A Simple Turing Machine

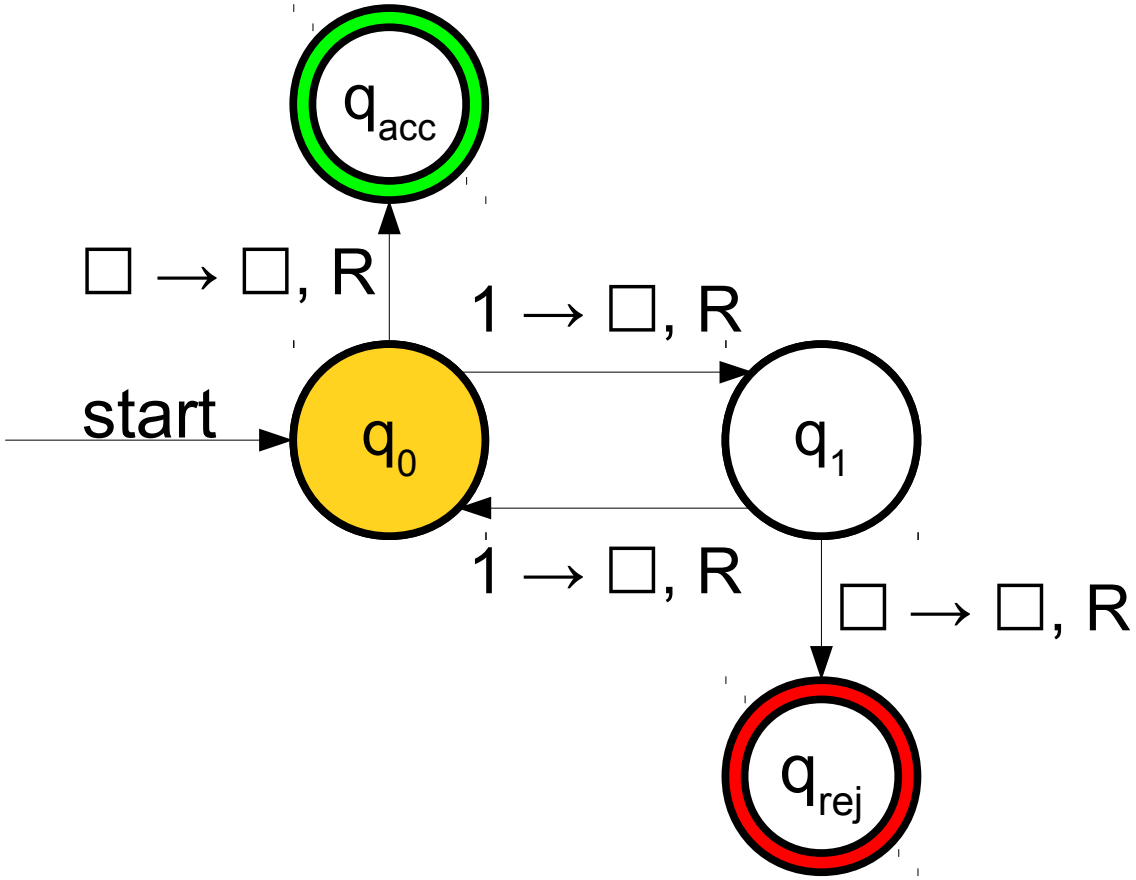

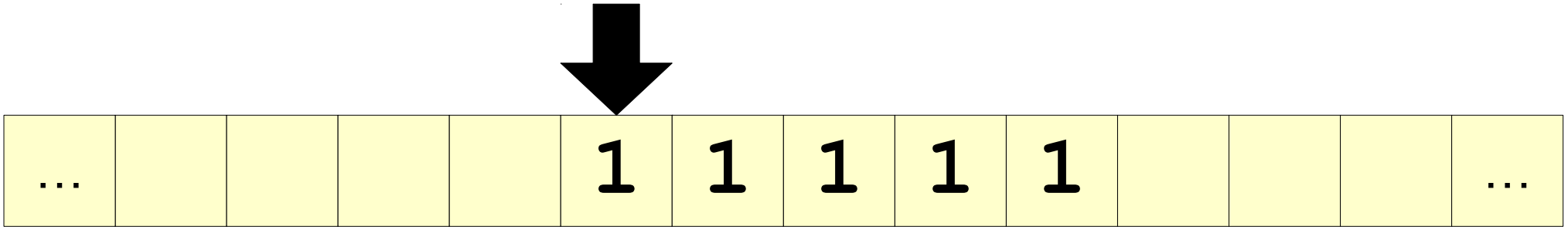

A Simple Turing Machine

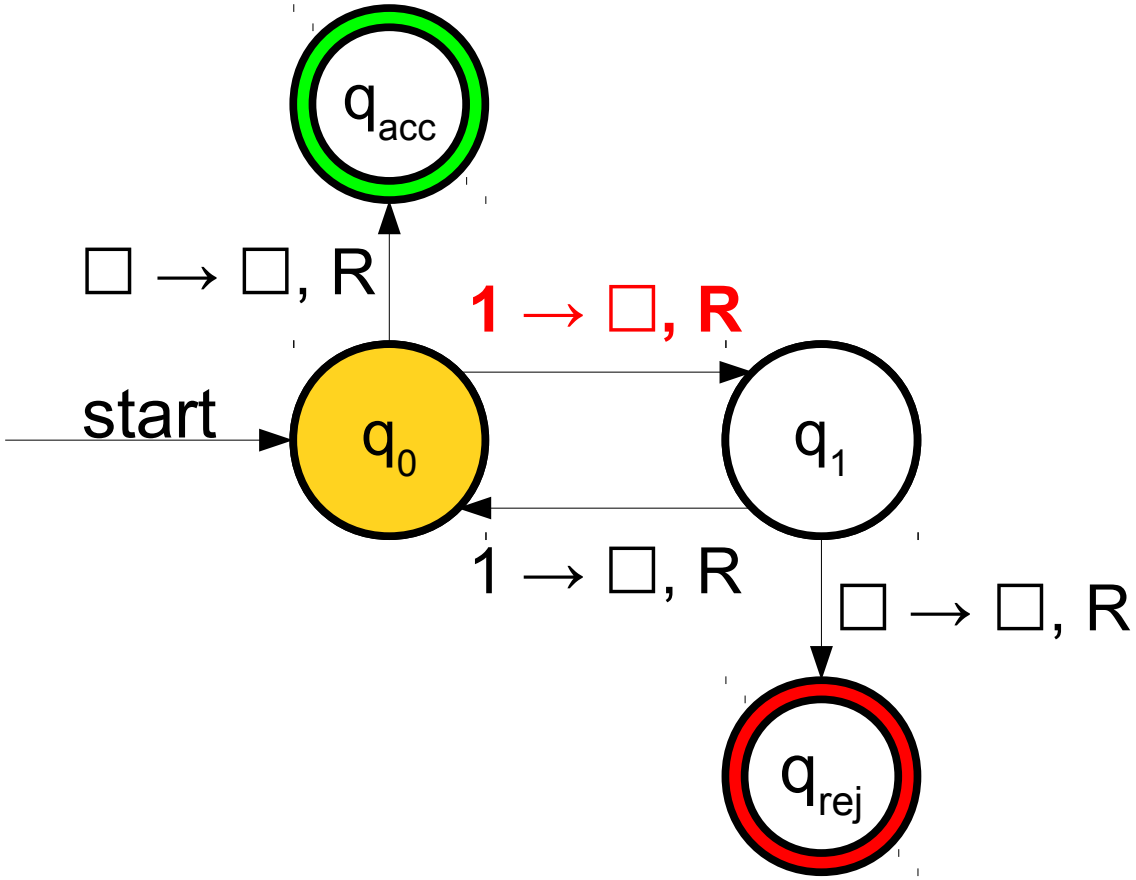

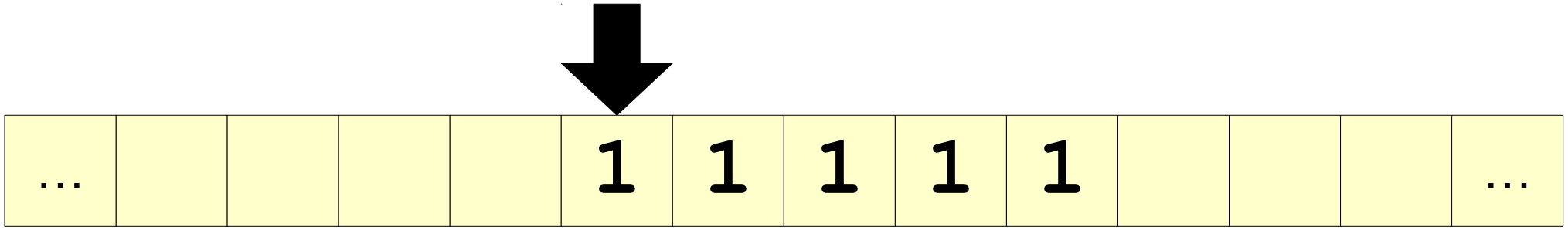

A Simple Turing Machine

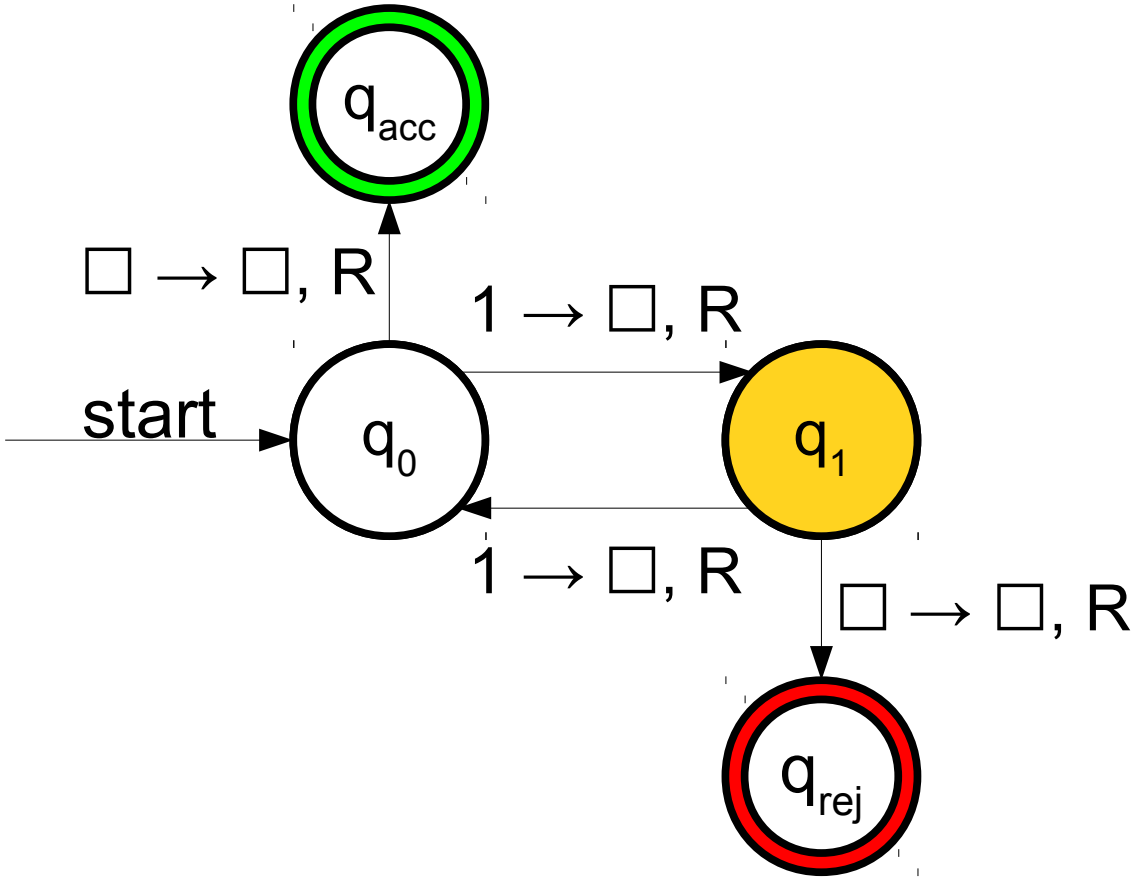

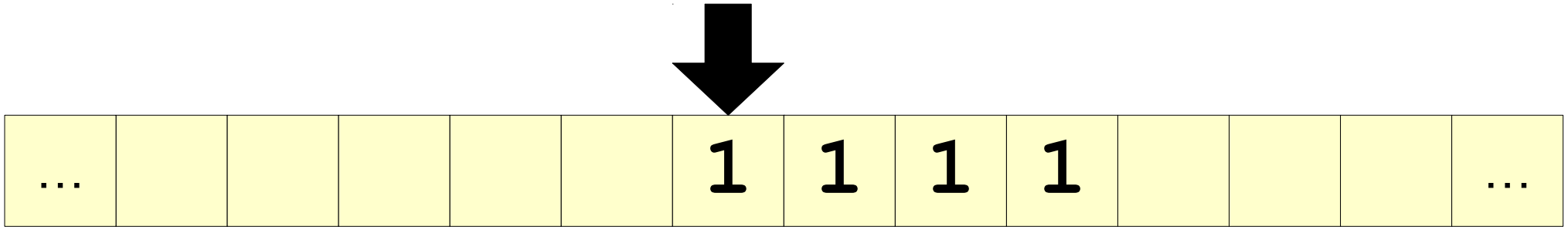

A Simple Turing Machine

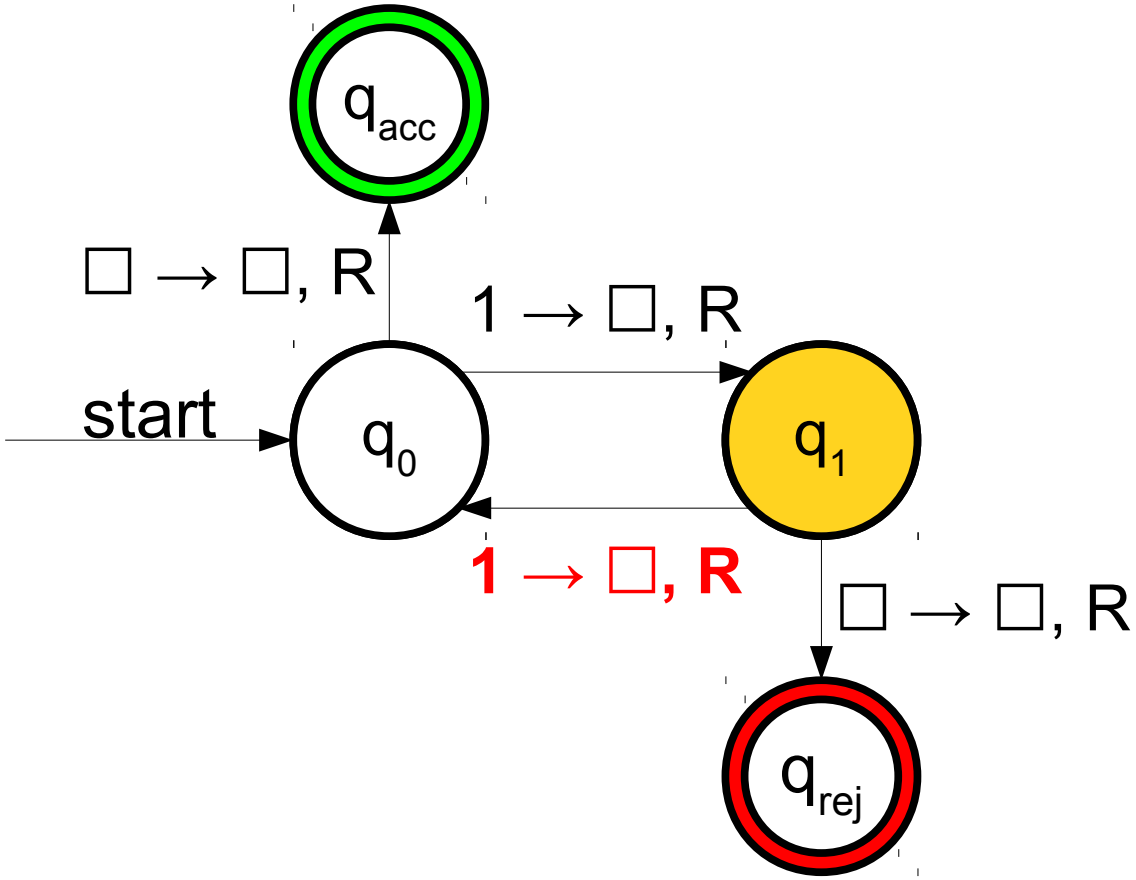

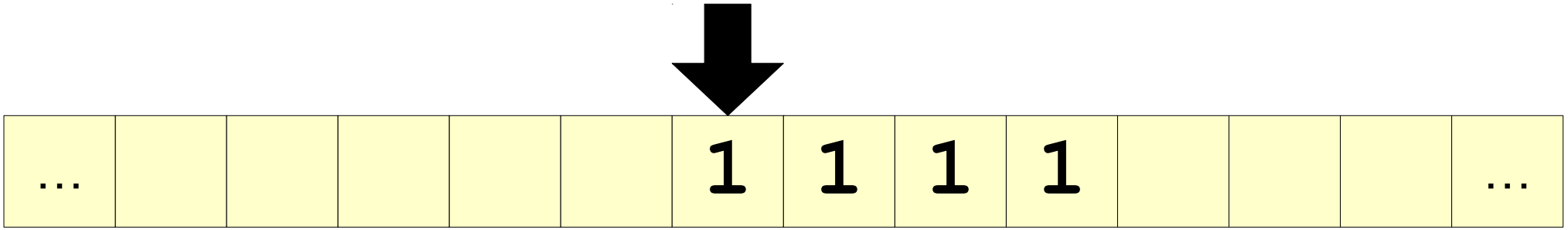

A Simple Turing Machine

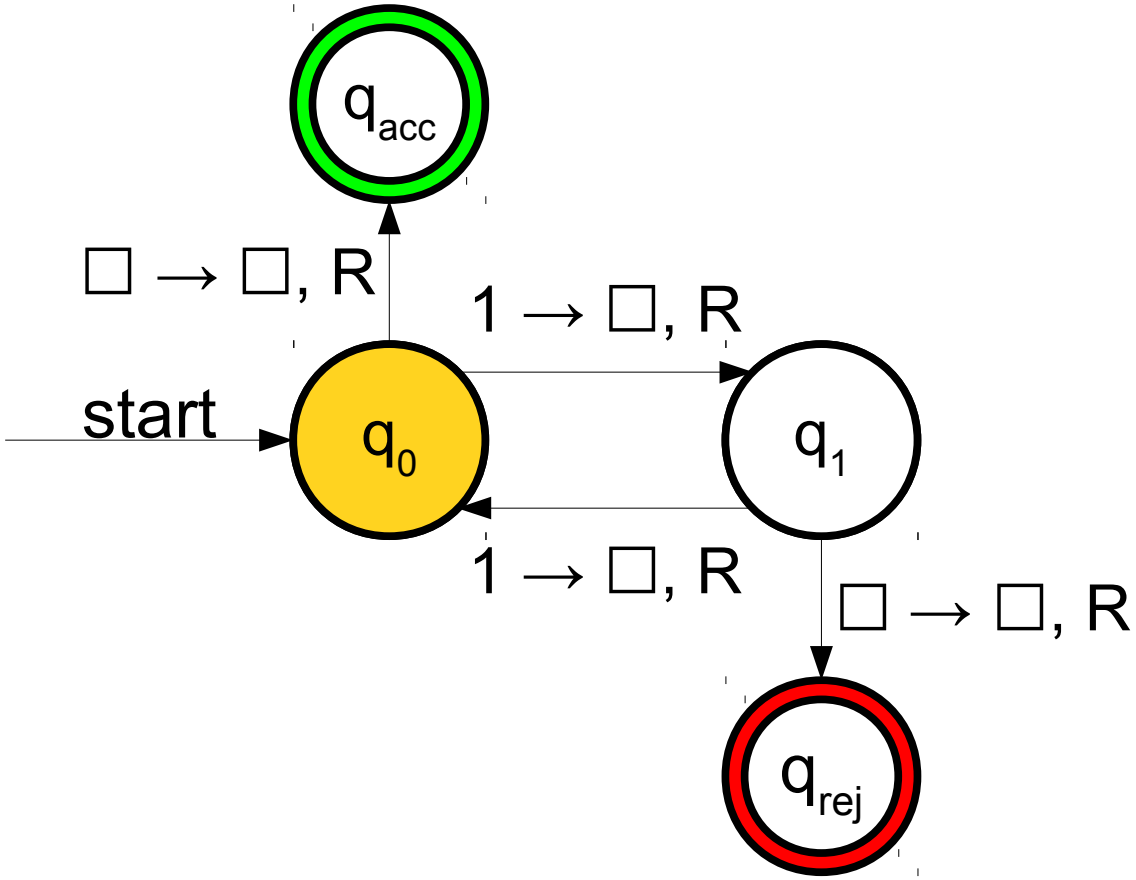

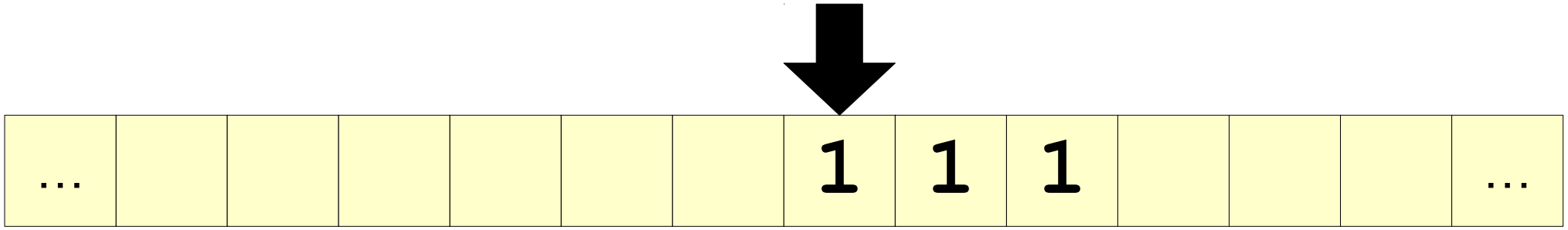

A Simple Turing Machine

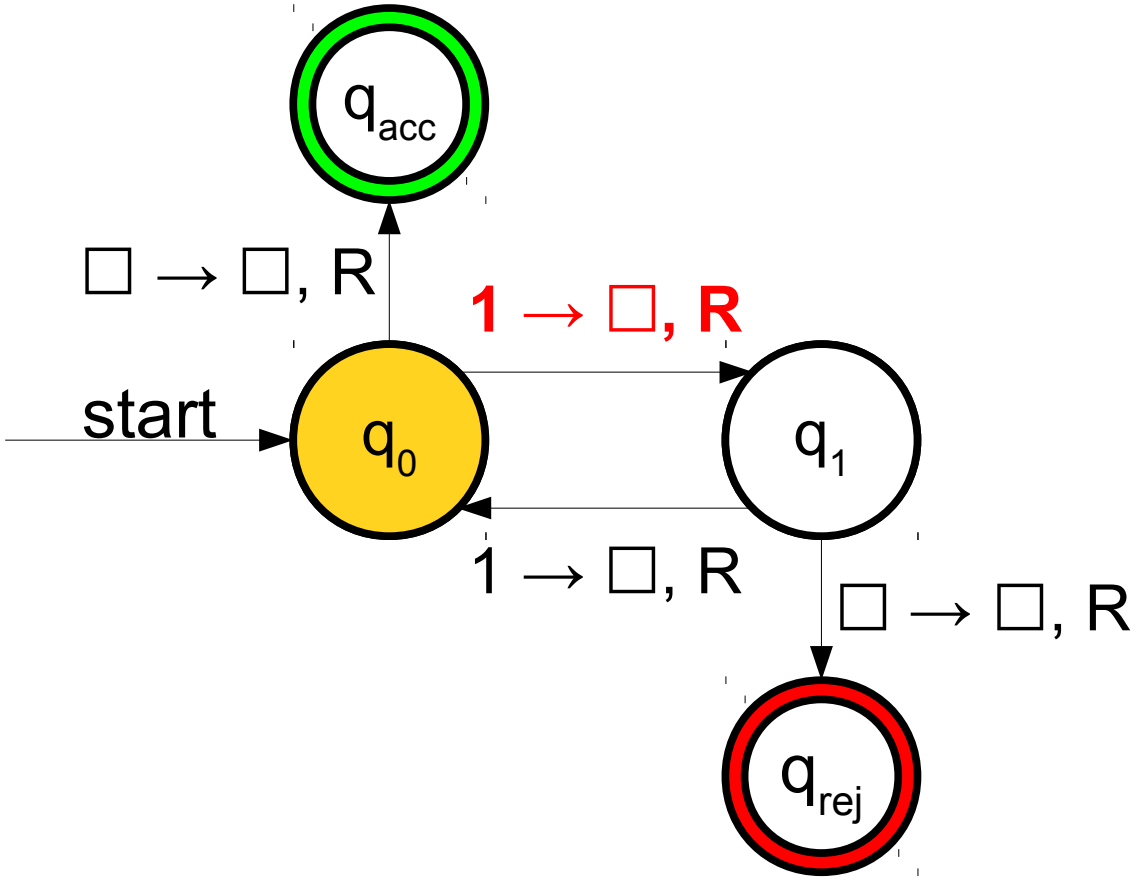

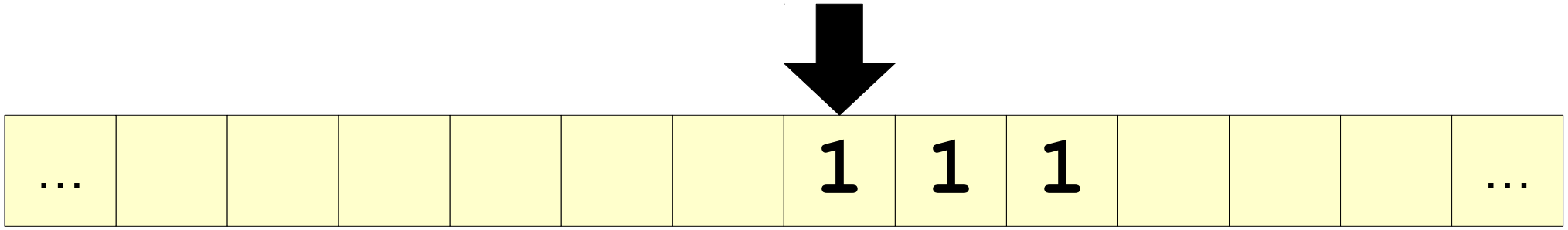

A Simple Turing Machine

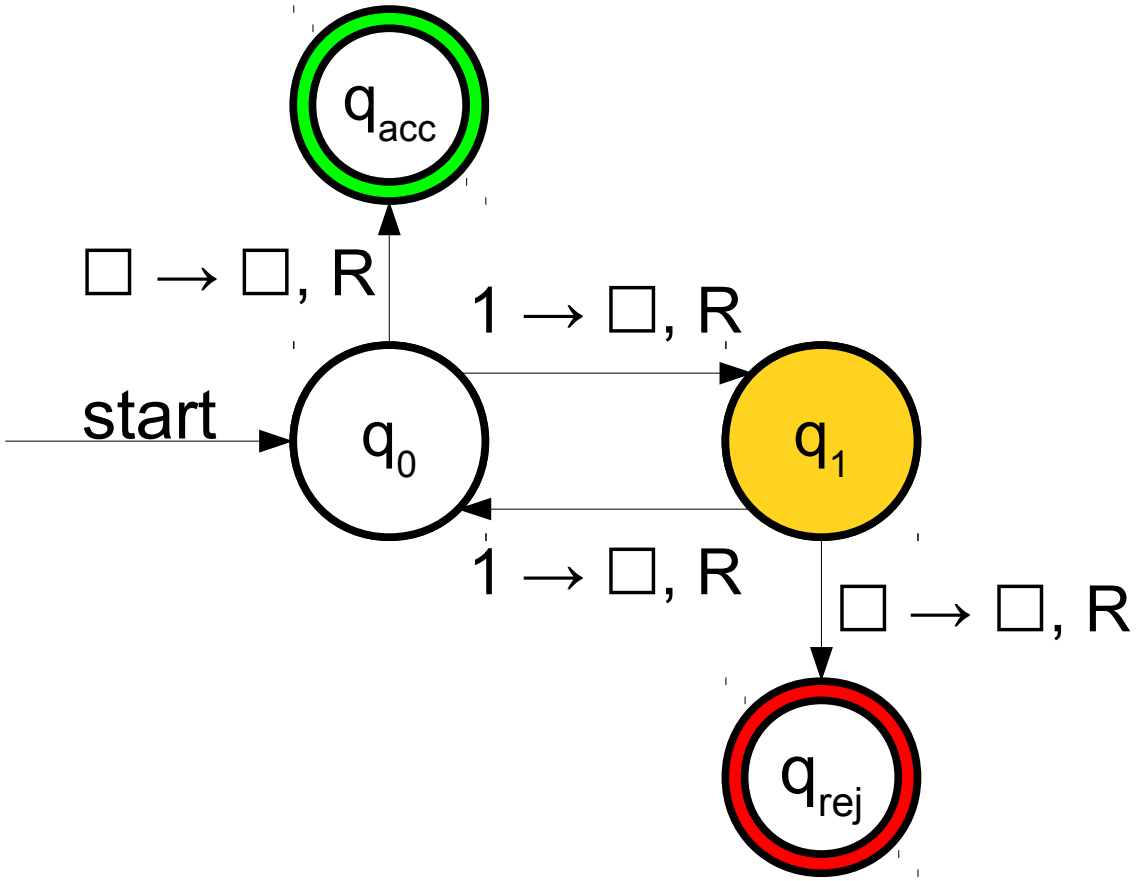

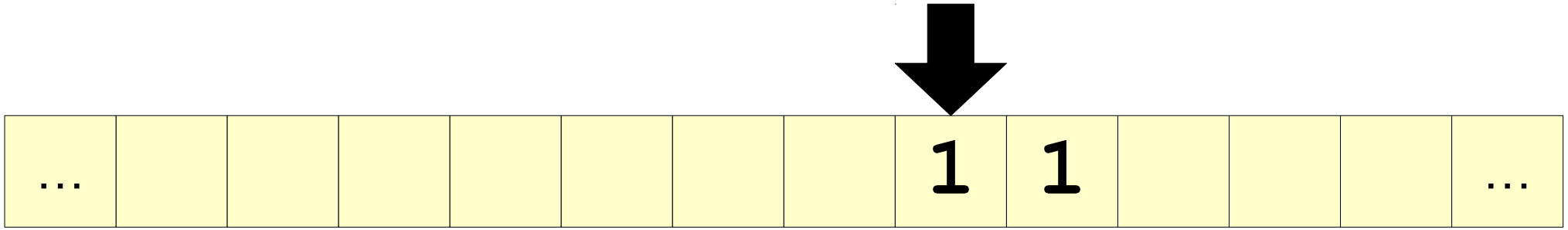

A Simple Turing Machine

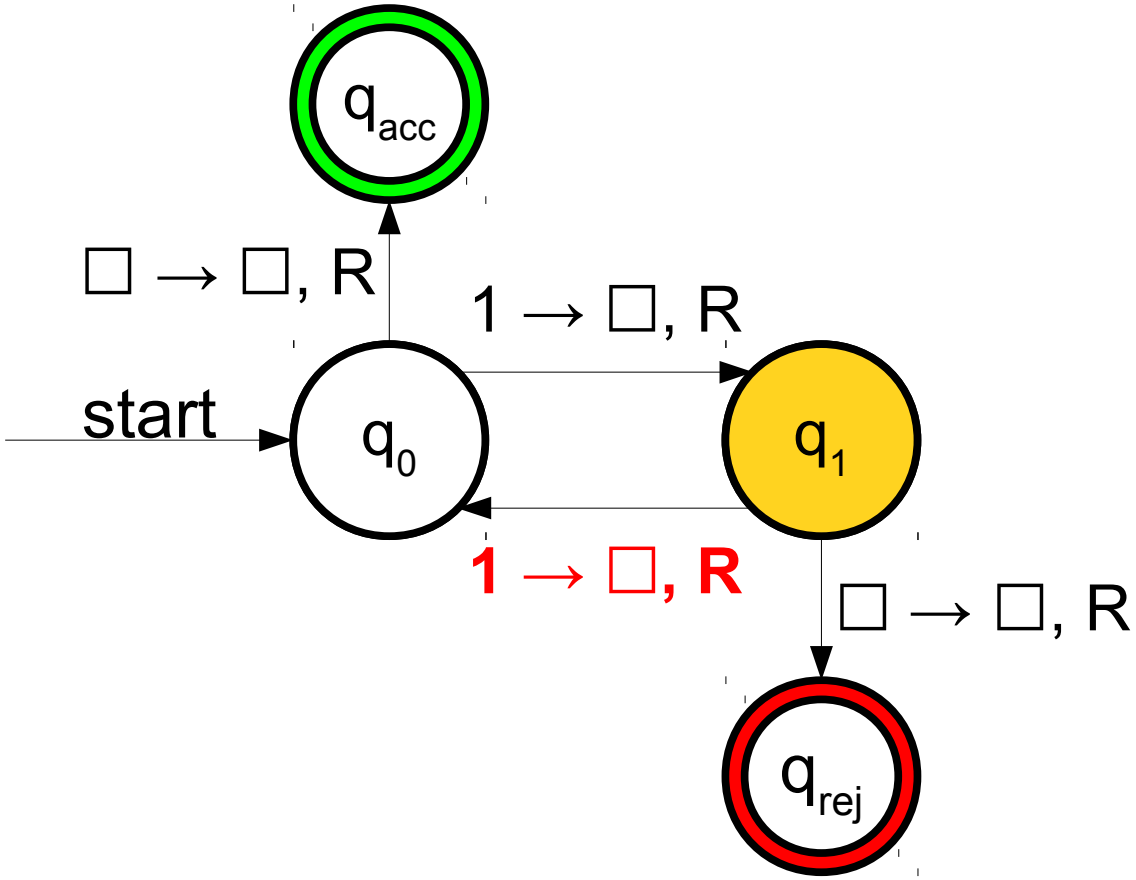

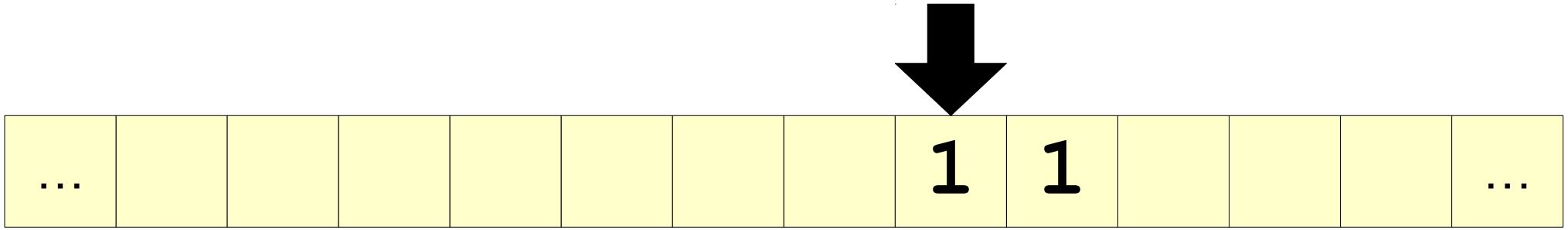

A Simple Turing Machine

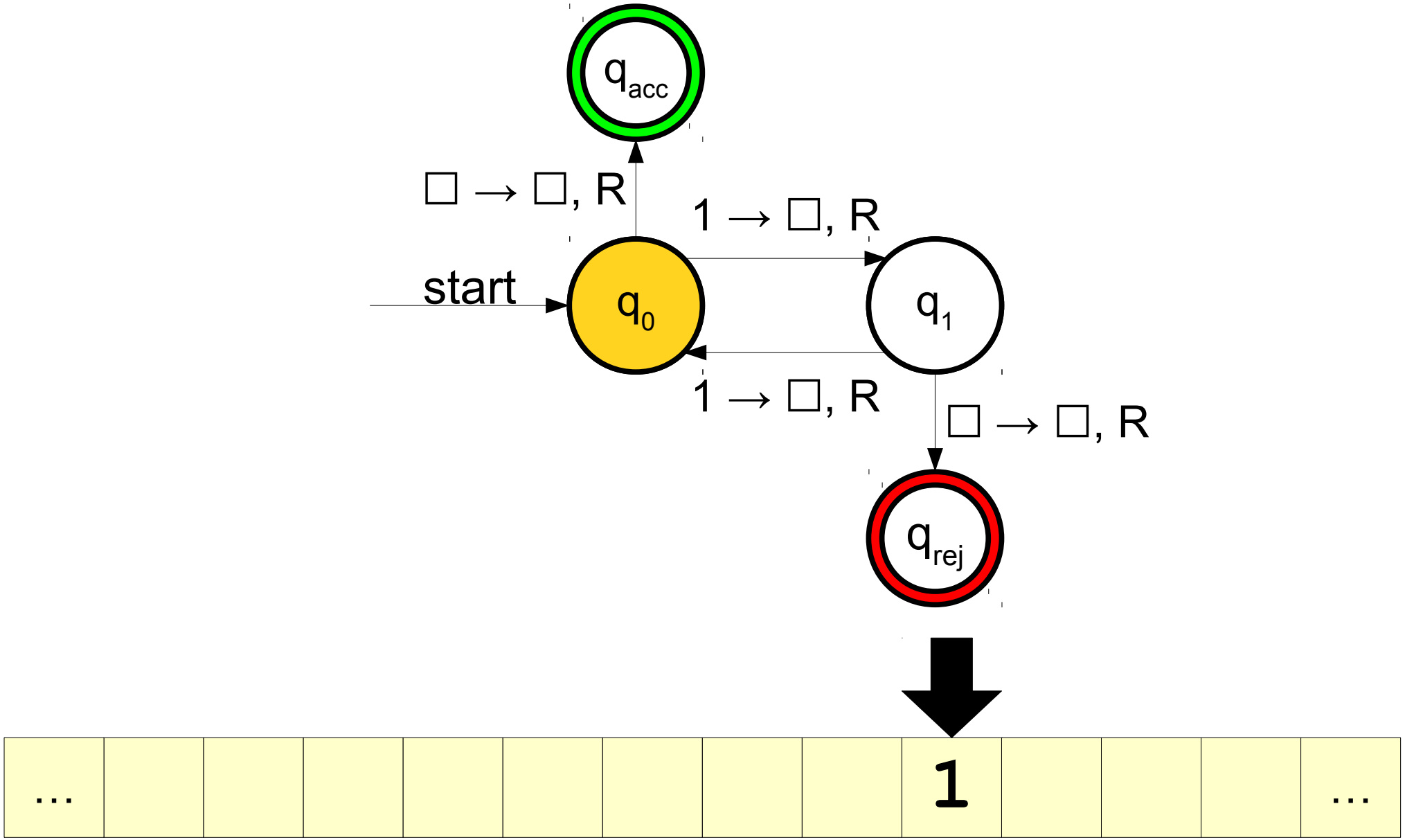

A Simple Turing Machine

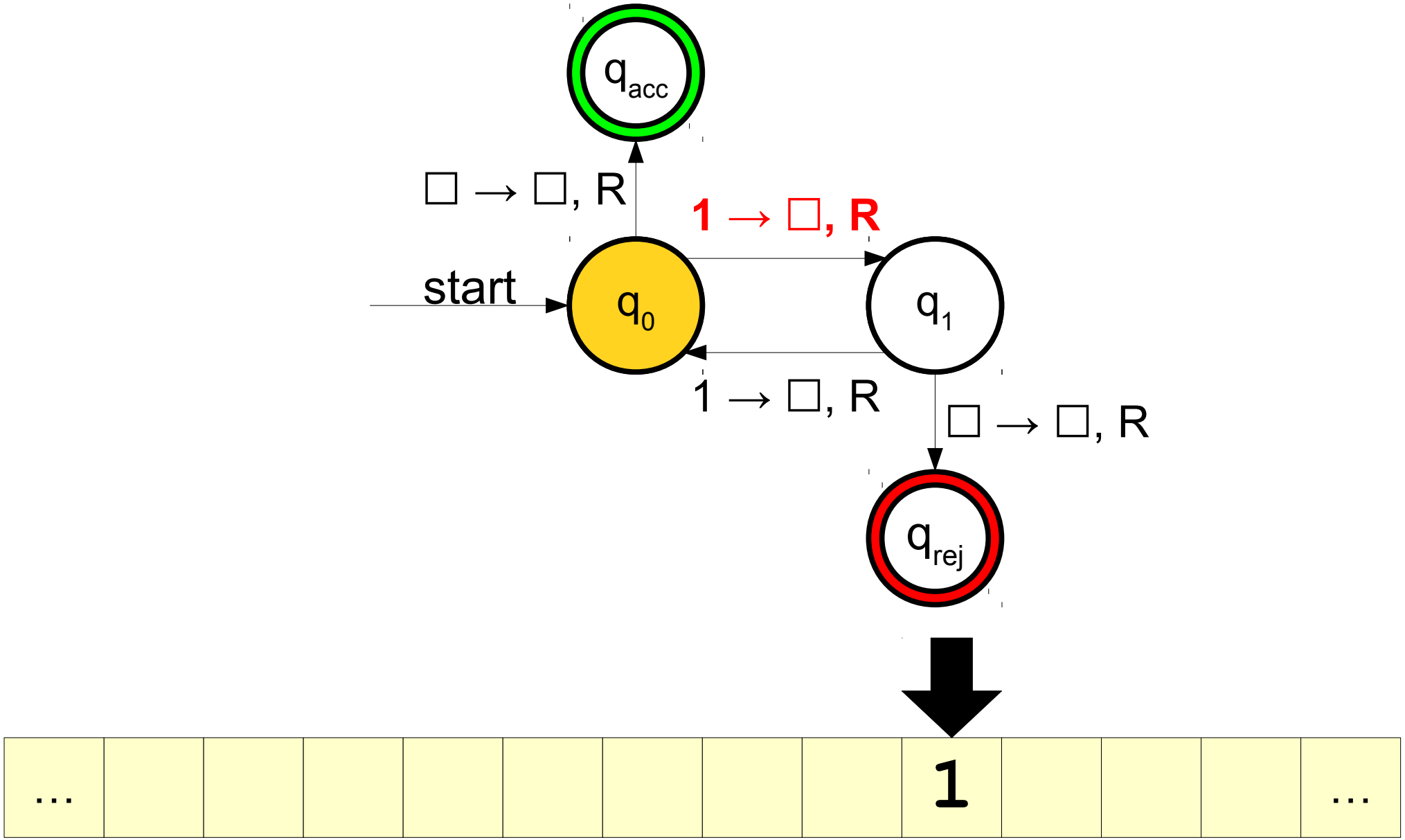

A Simple Turing Machine

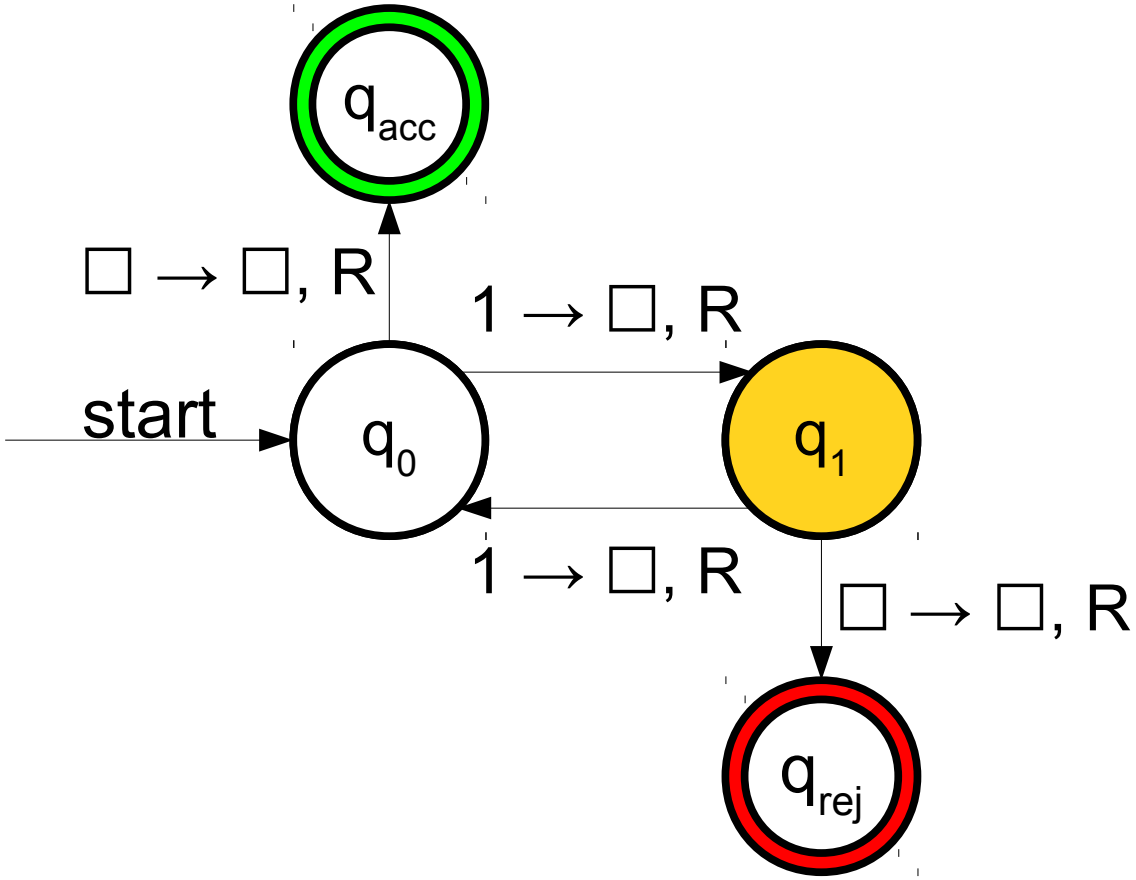

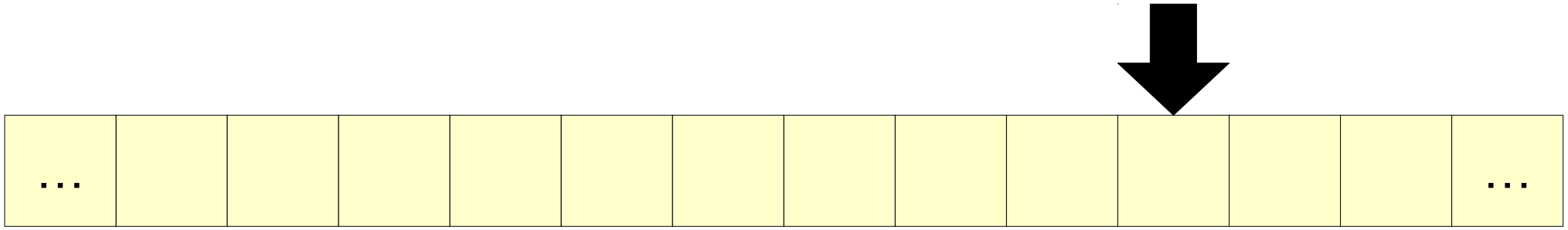

A Simple Turing Machine

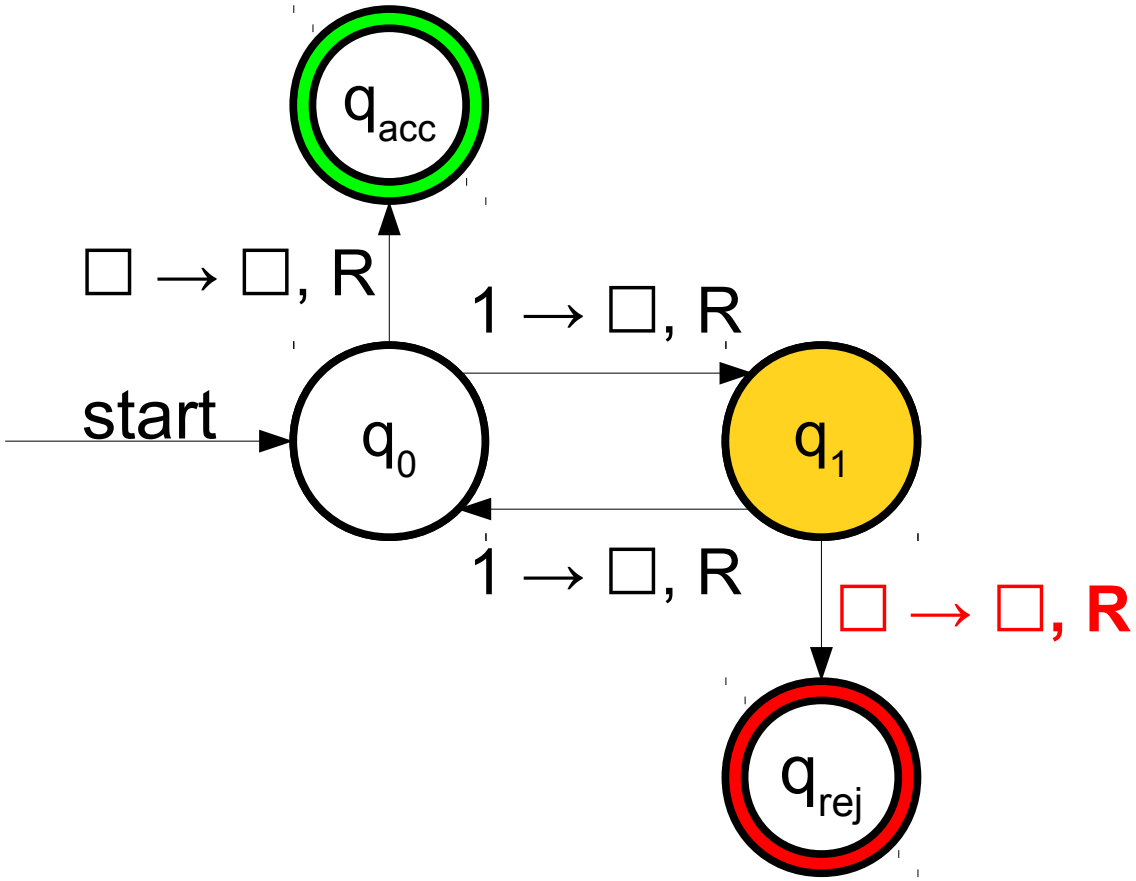

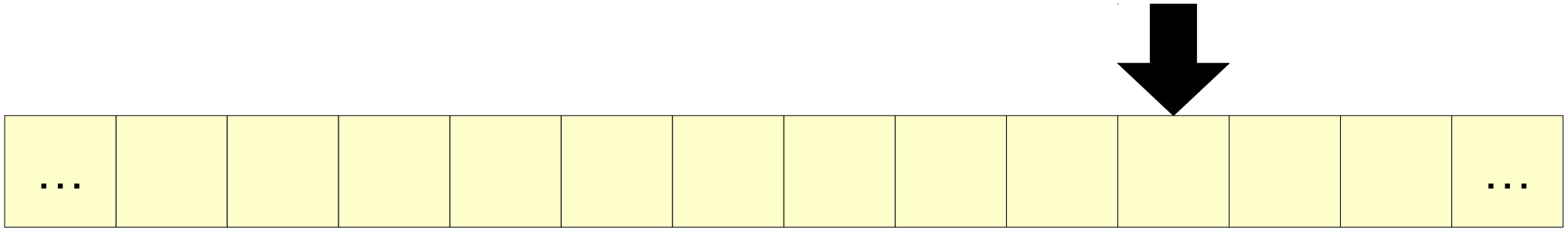

A Simple Turing Machine

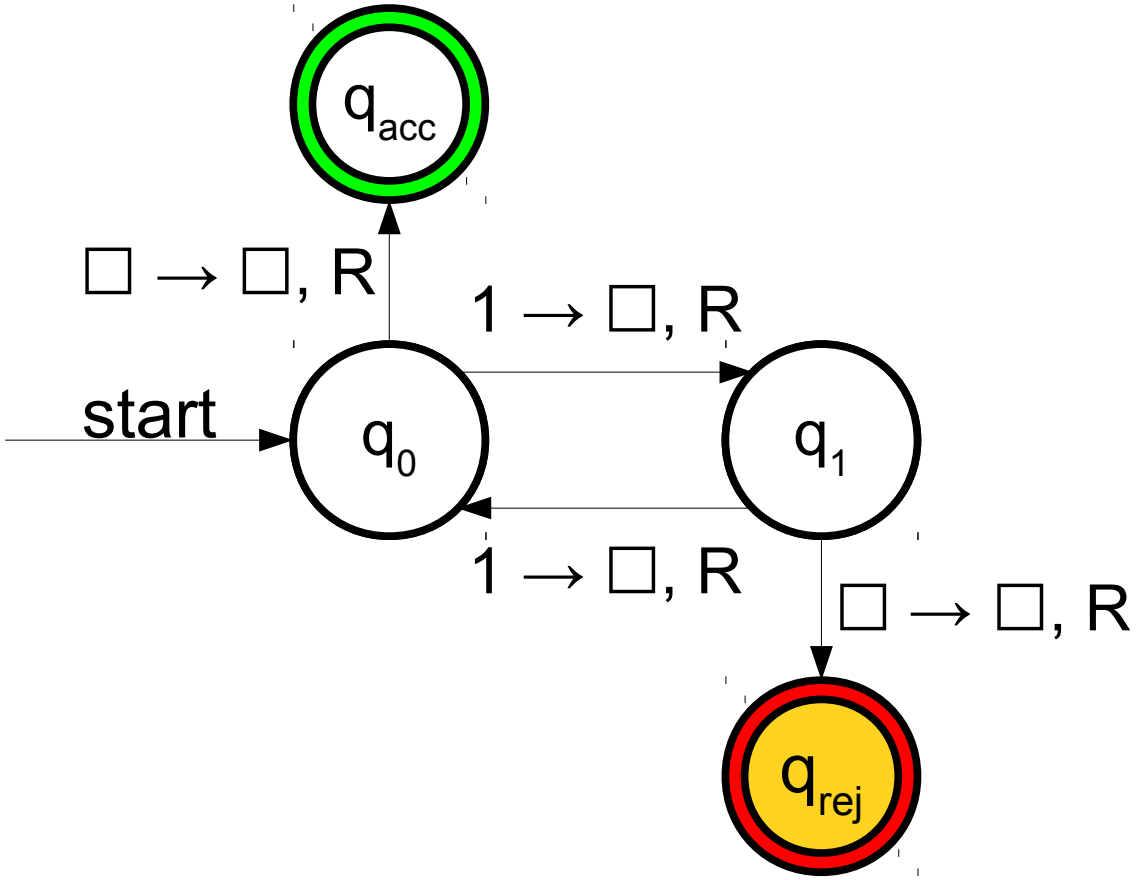

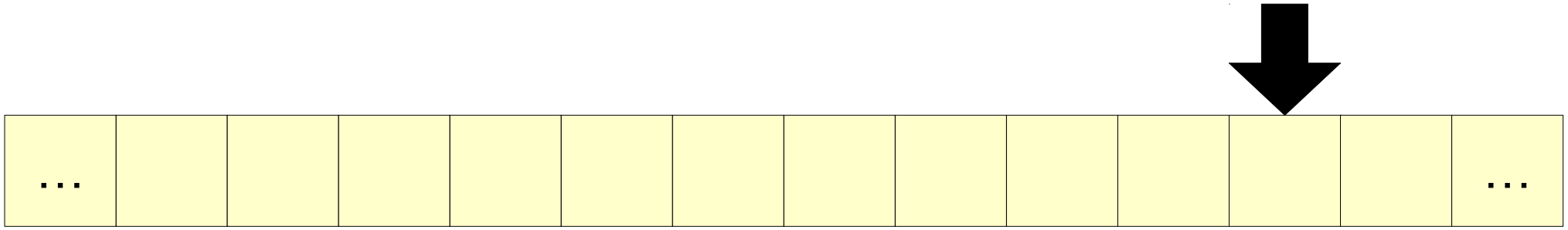

A Simple Turing Machine

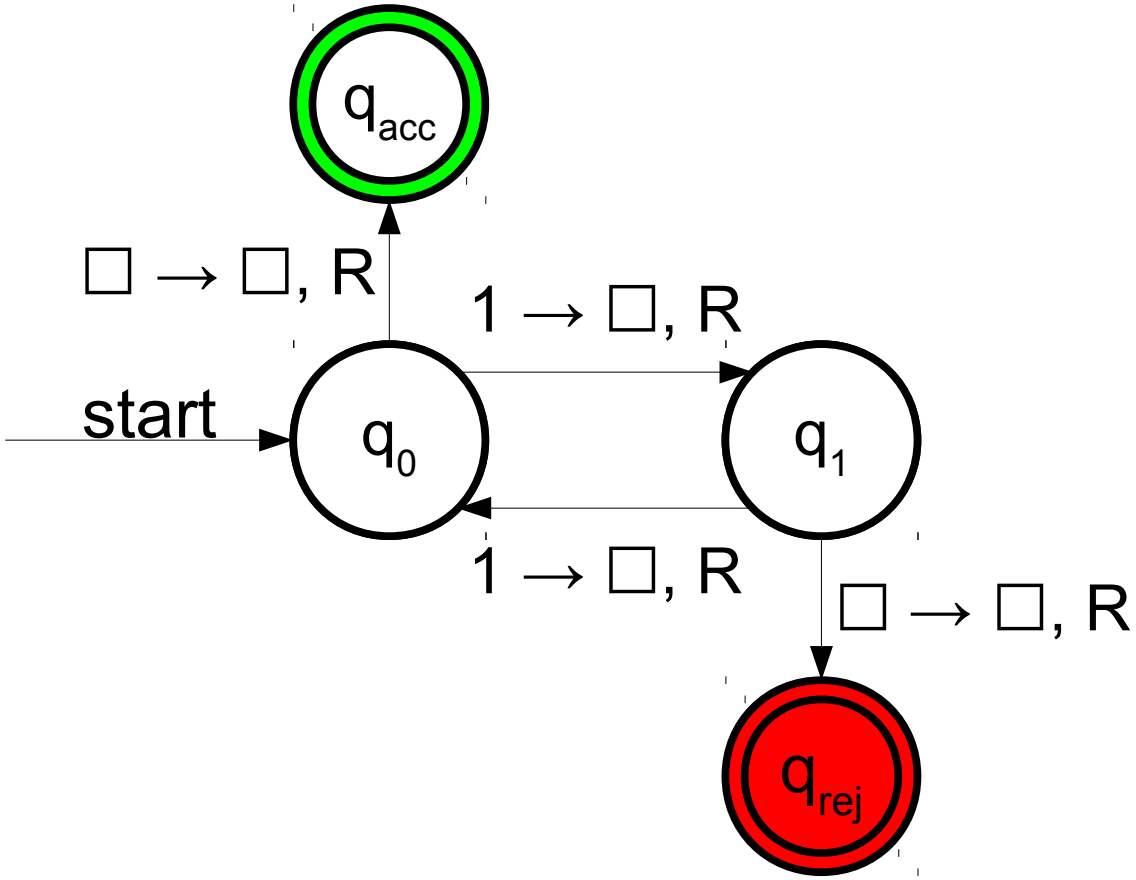

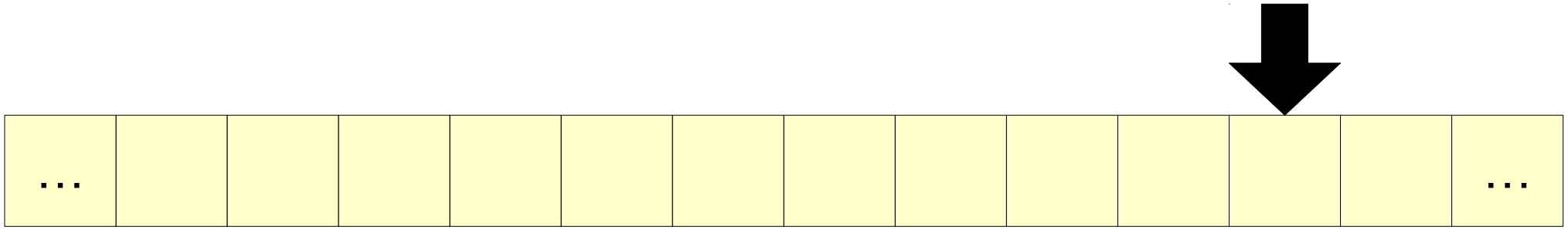

A Simple Turing Machine

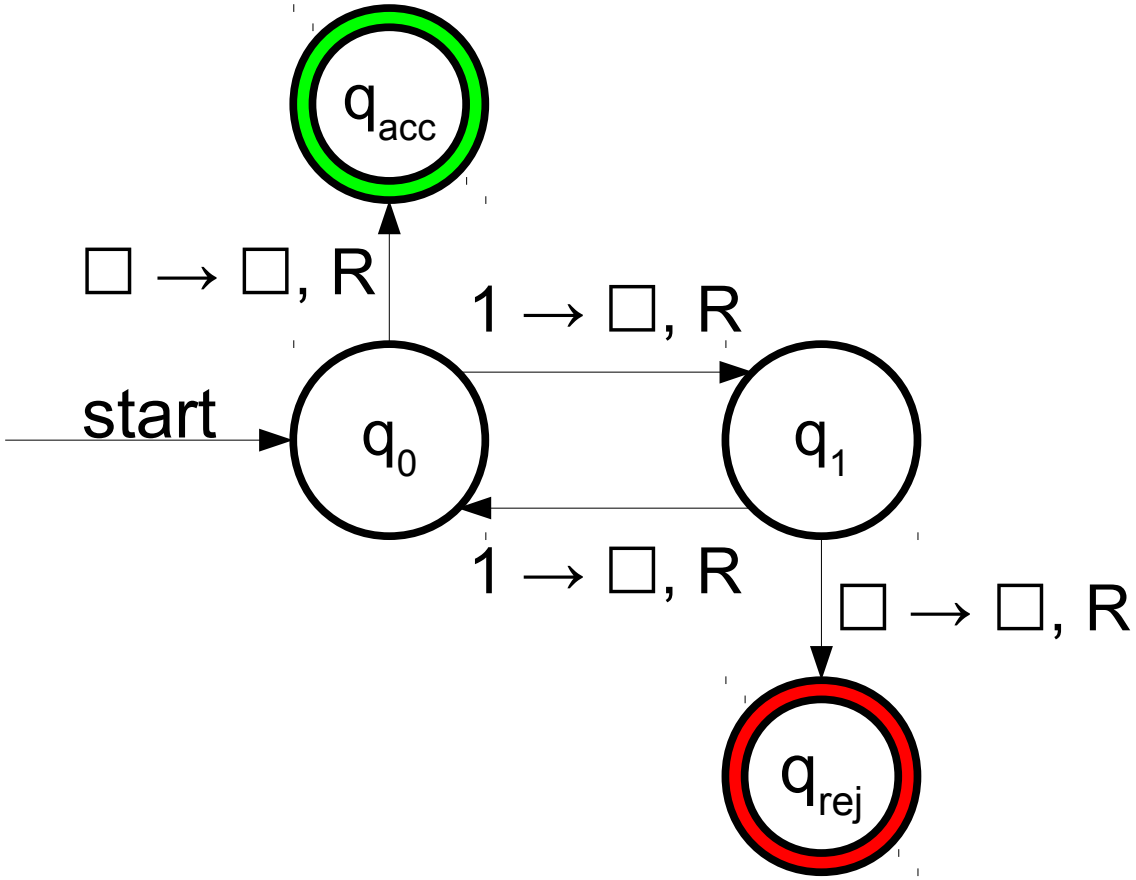

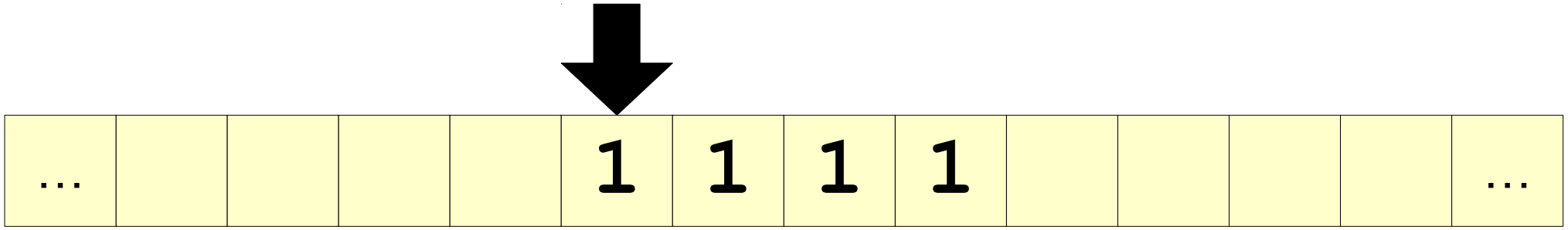

A Simple Turing Machine

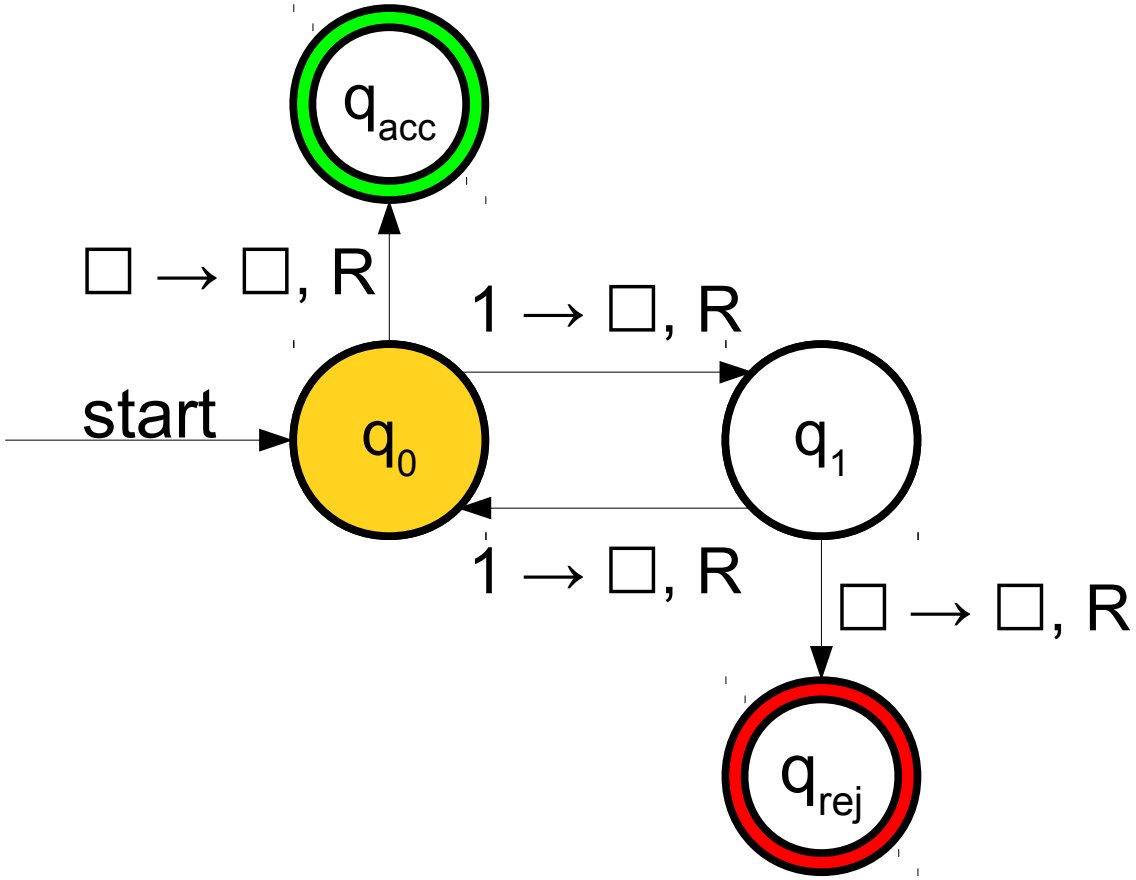

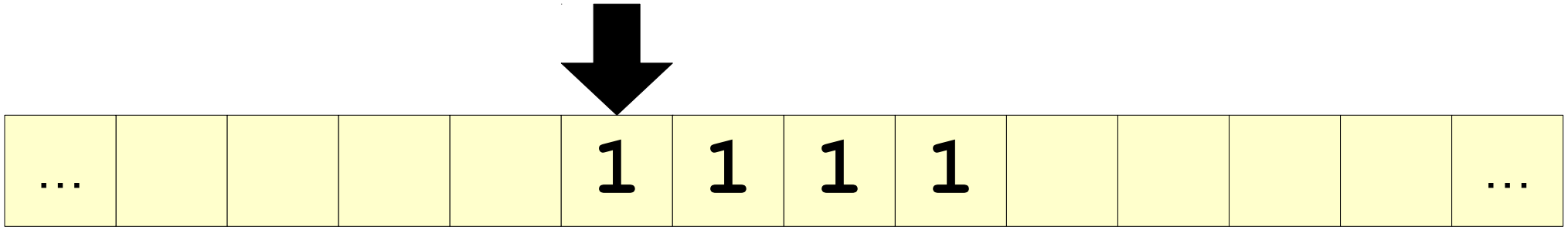

A Simple Turing Machine

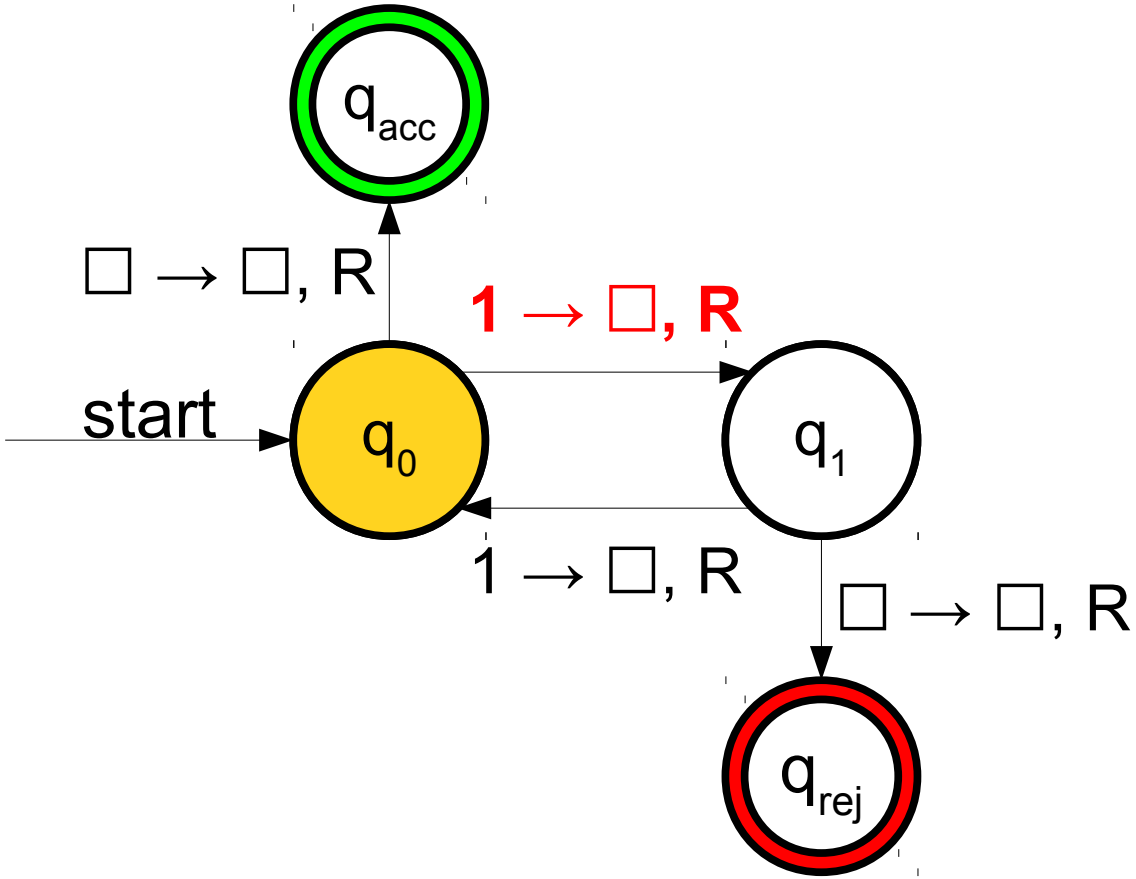

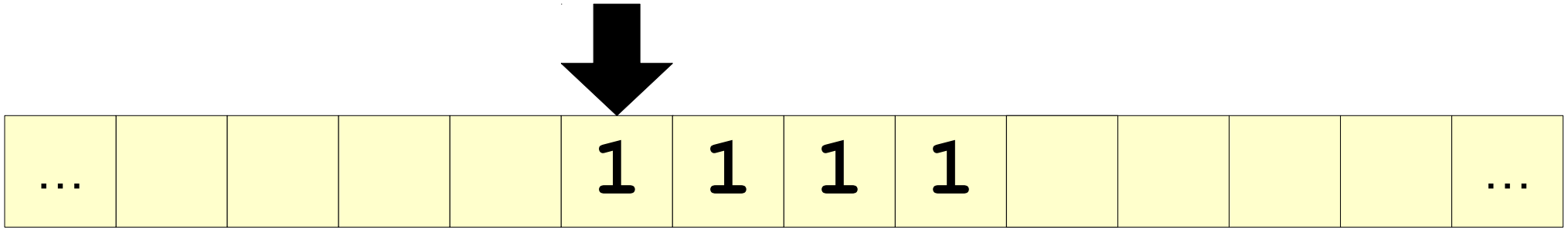

A Simple Turing Machine

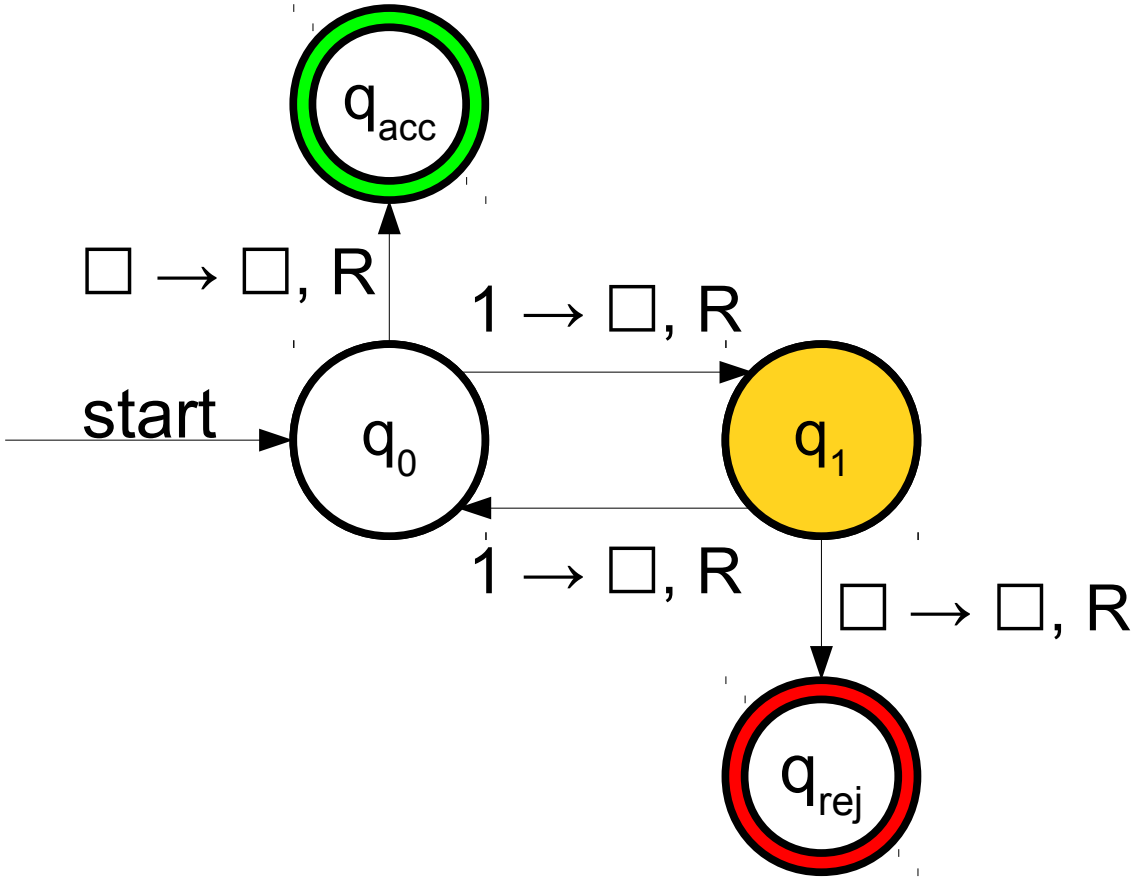

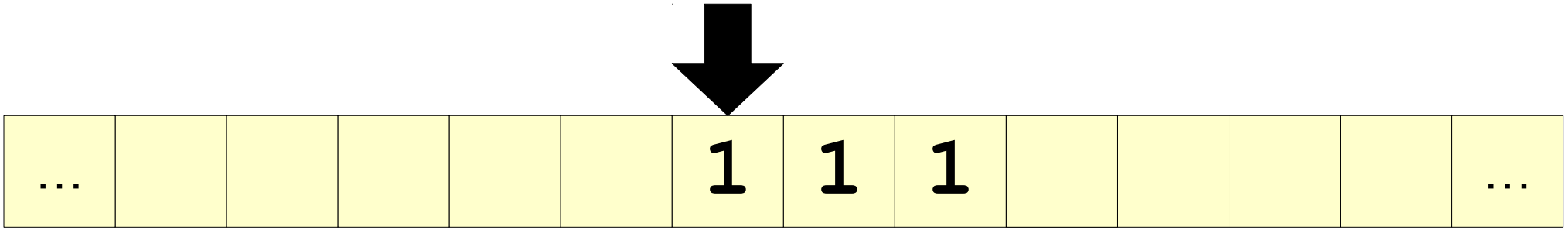

A Simple Turing Machine

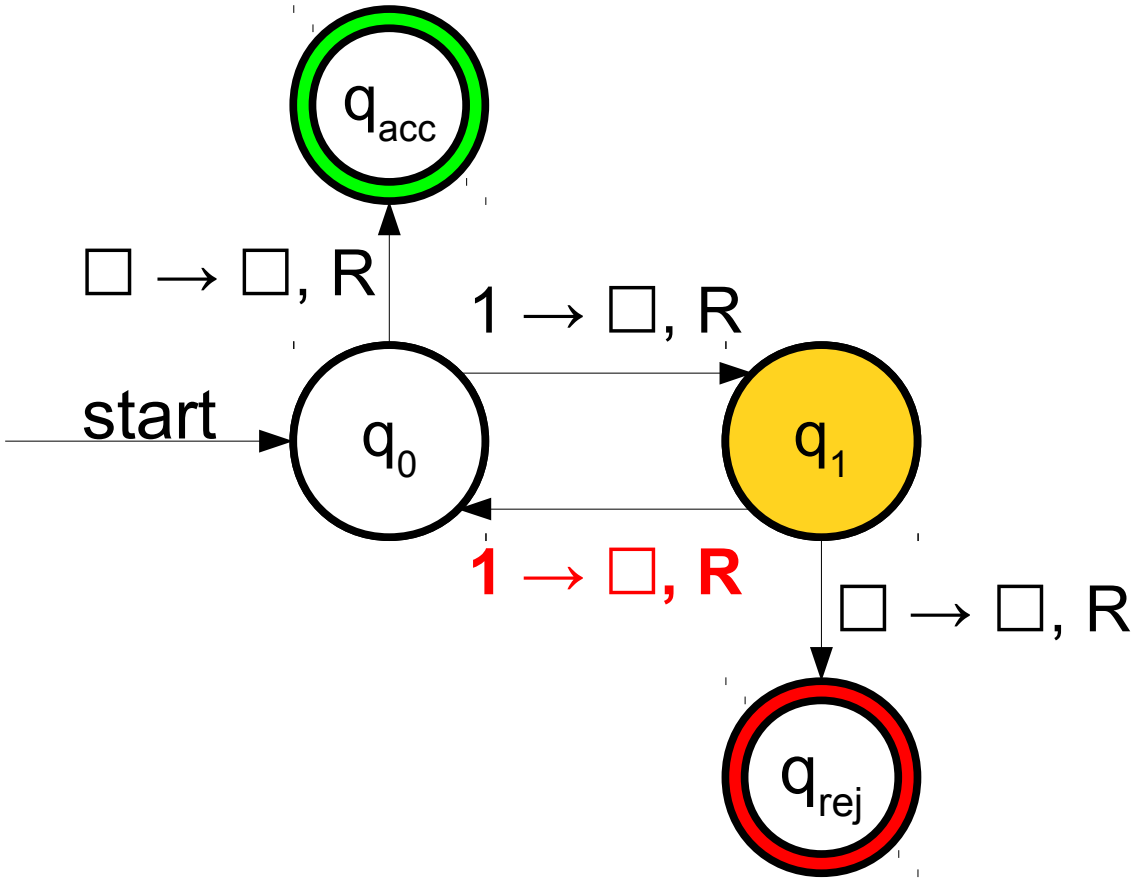

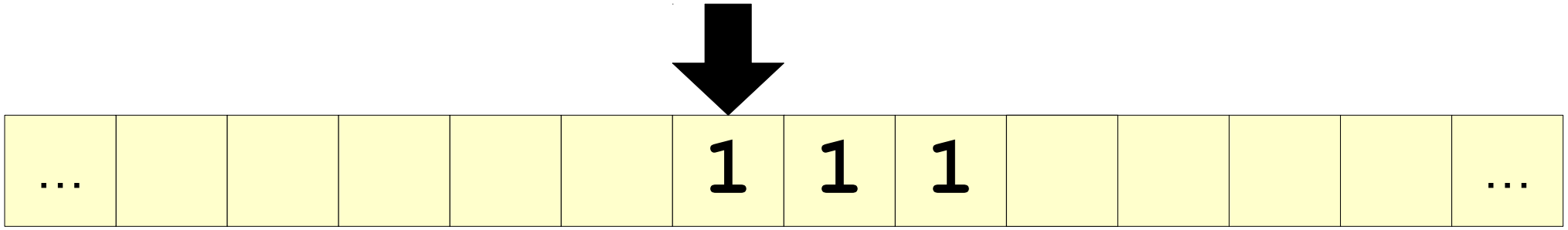

A Simple Turing Machine

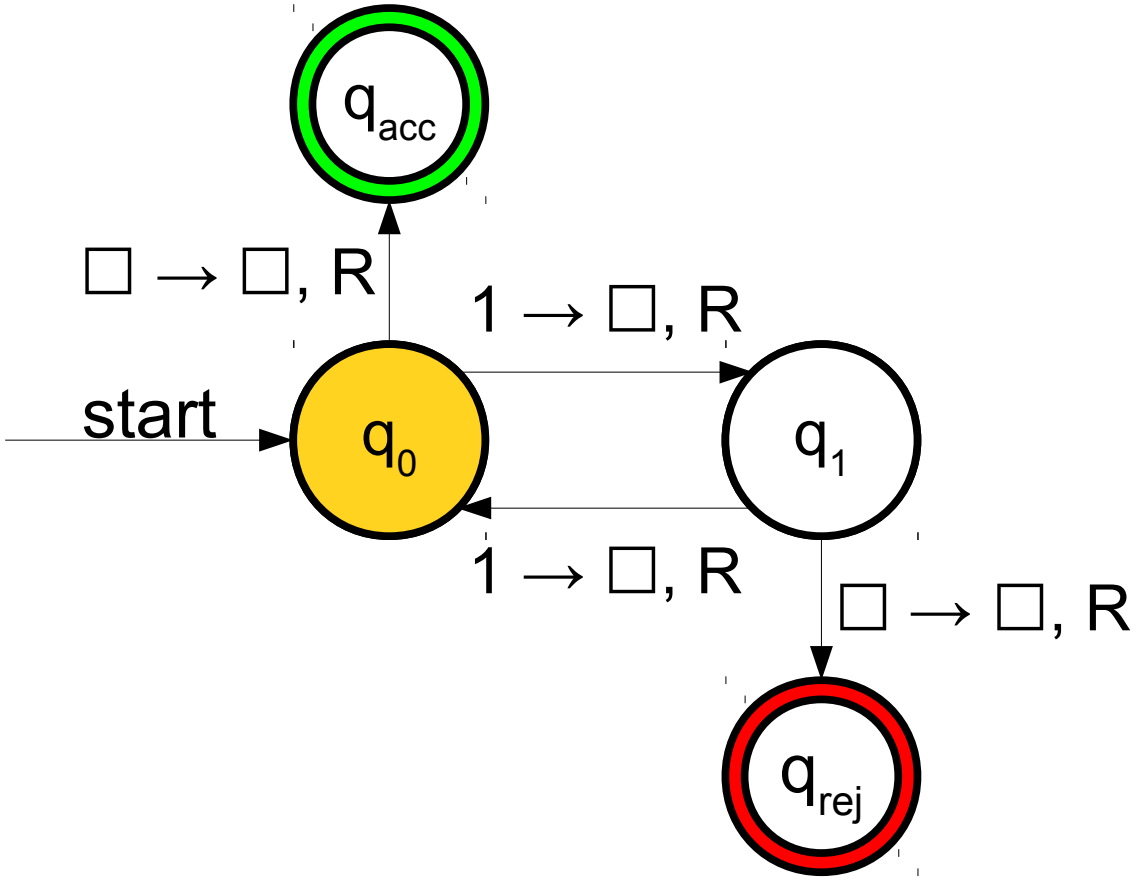

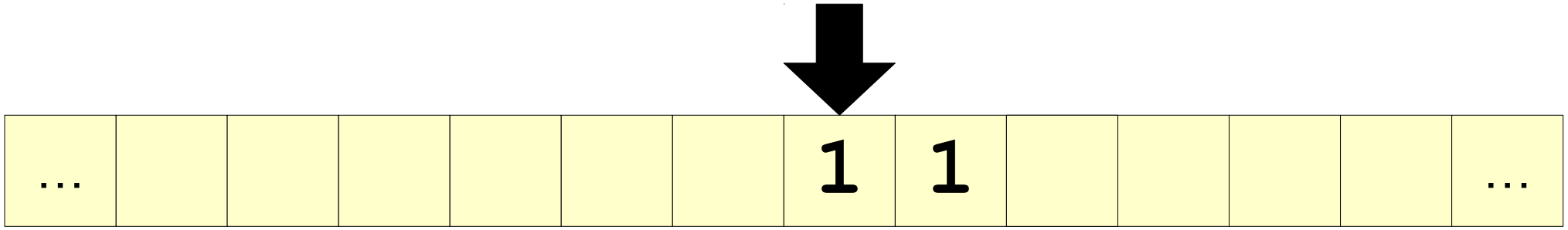

A Simple Turing Machine

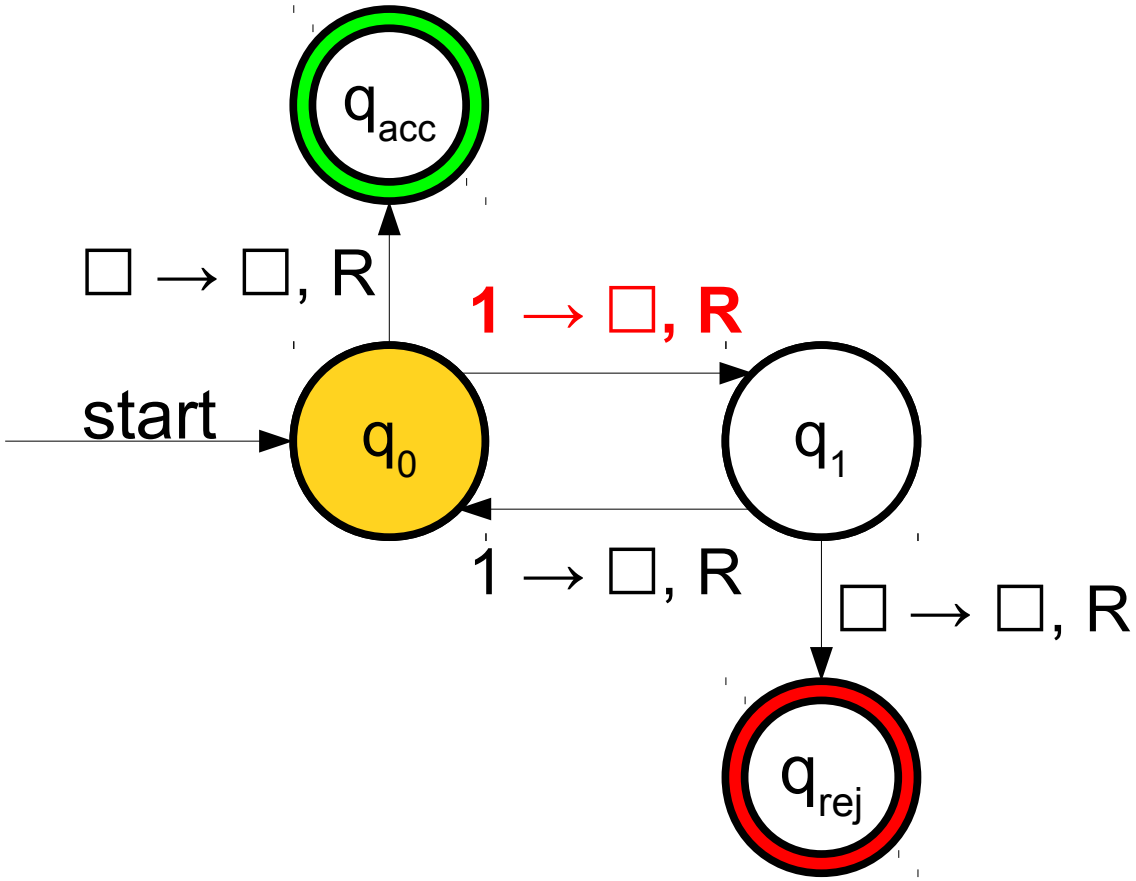

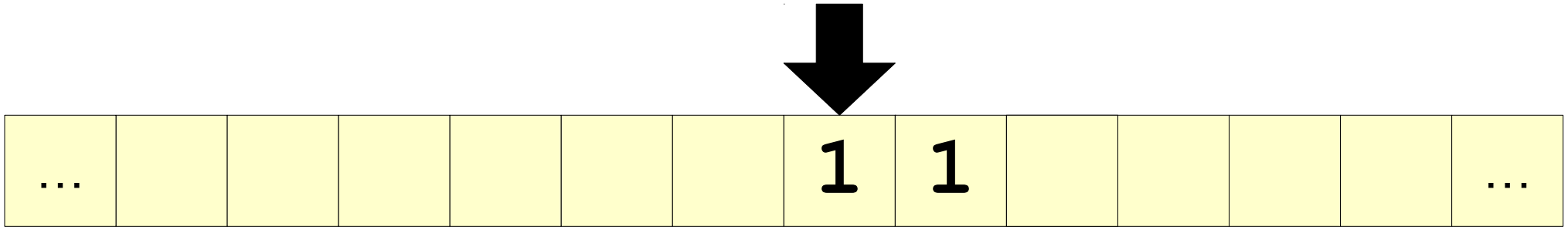

A Simple Turing Machine

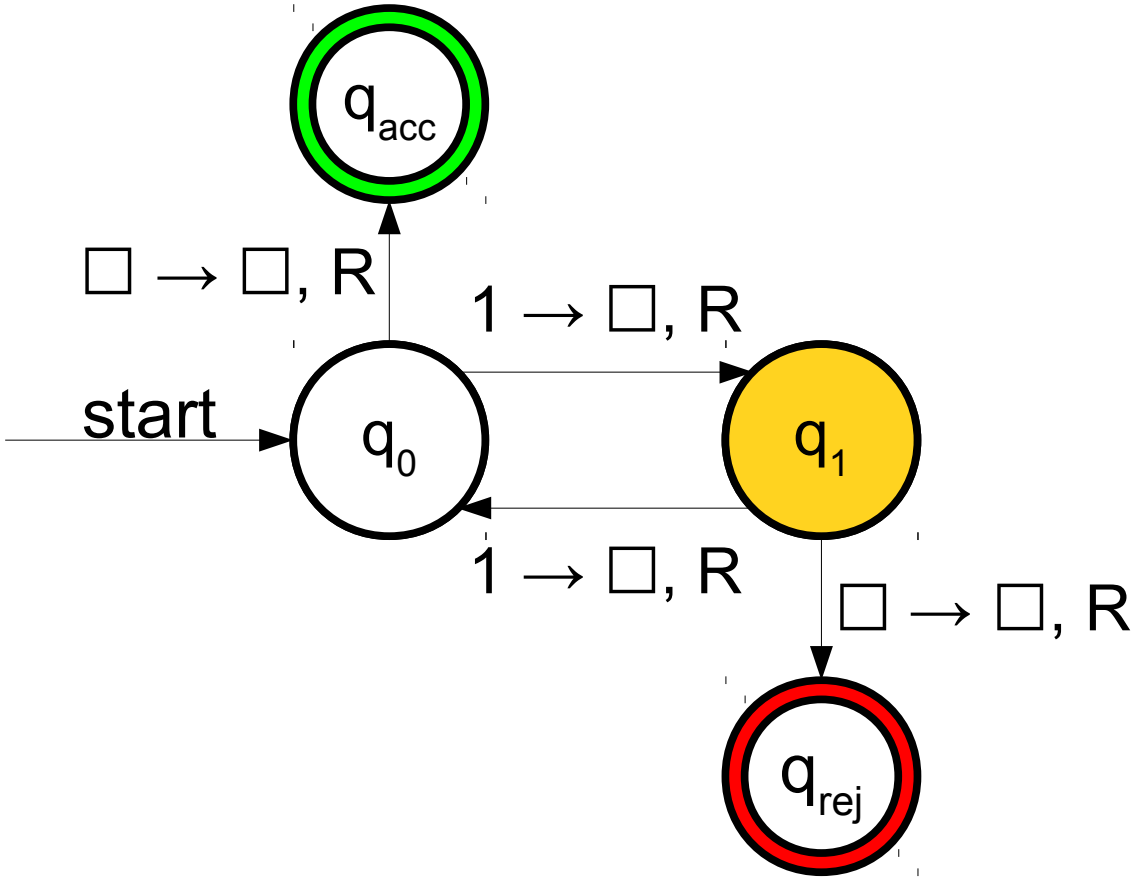

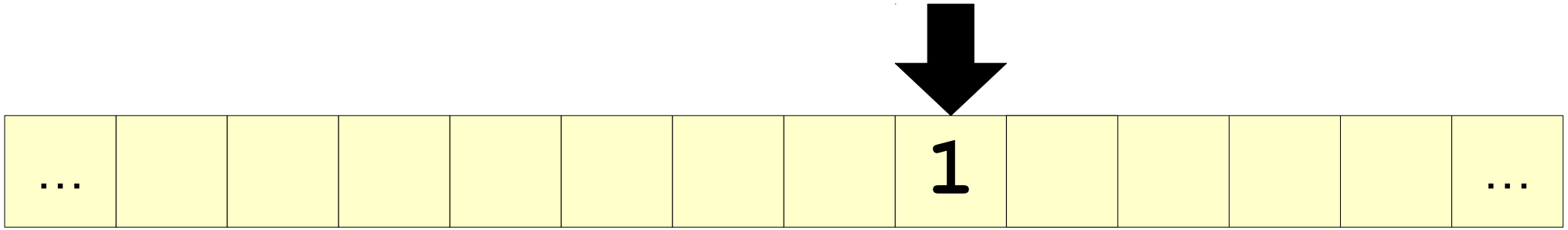

A Simple Turing Machine

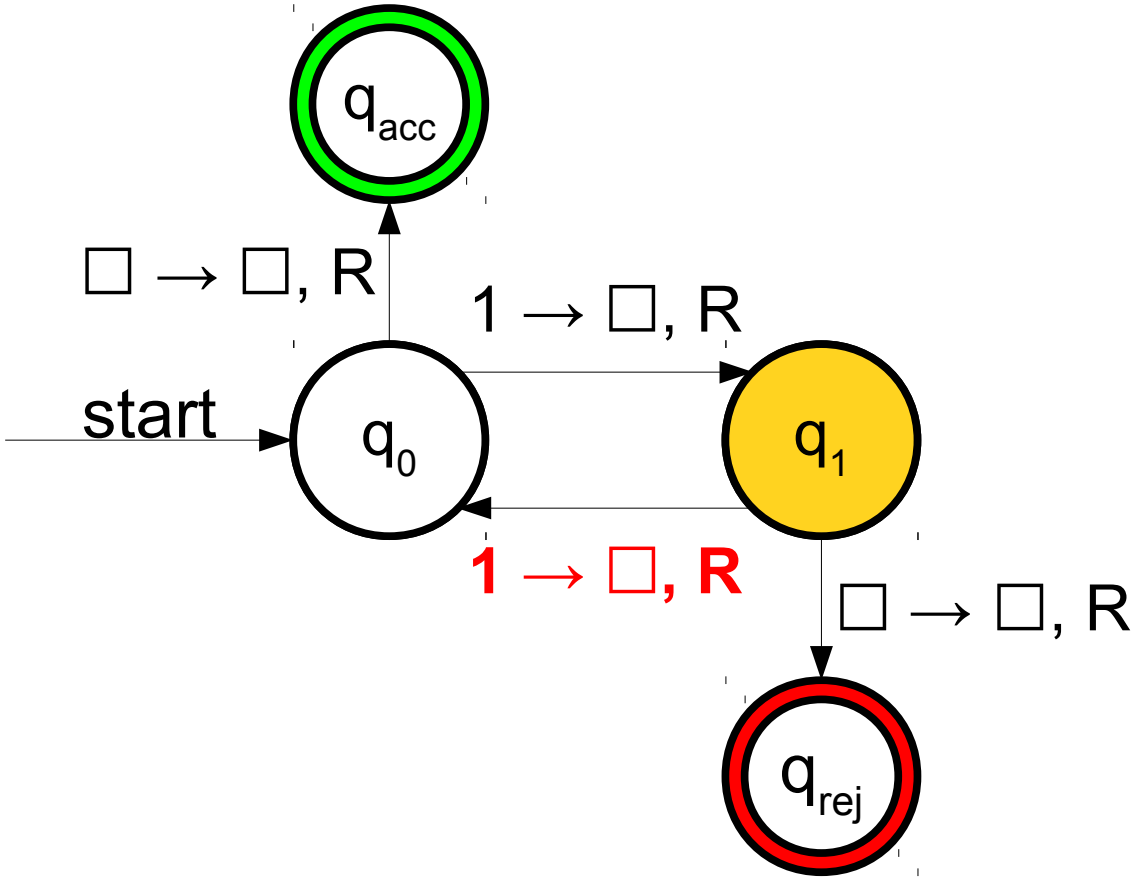

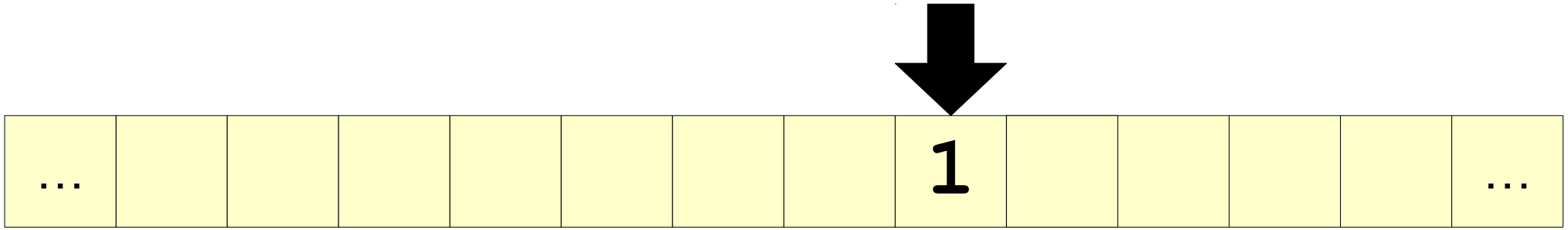

A Simple Turing Machine

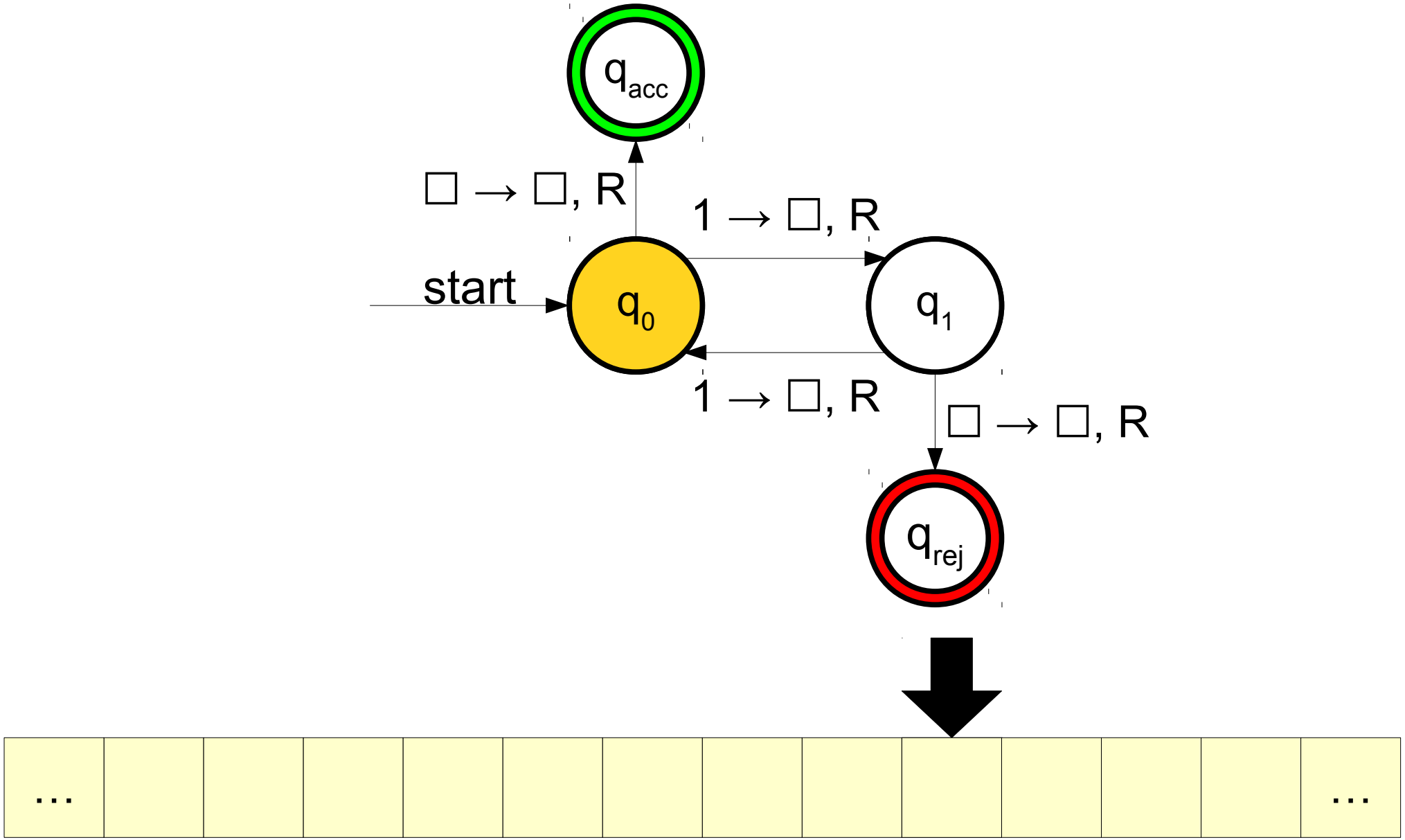

A Simple Turing Machine

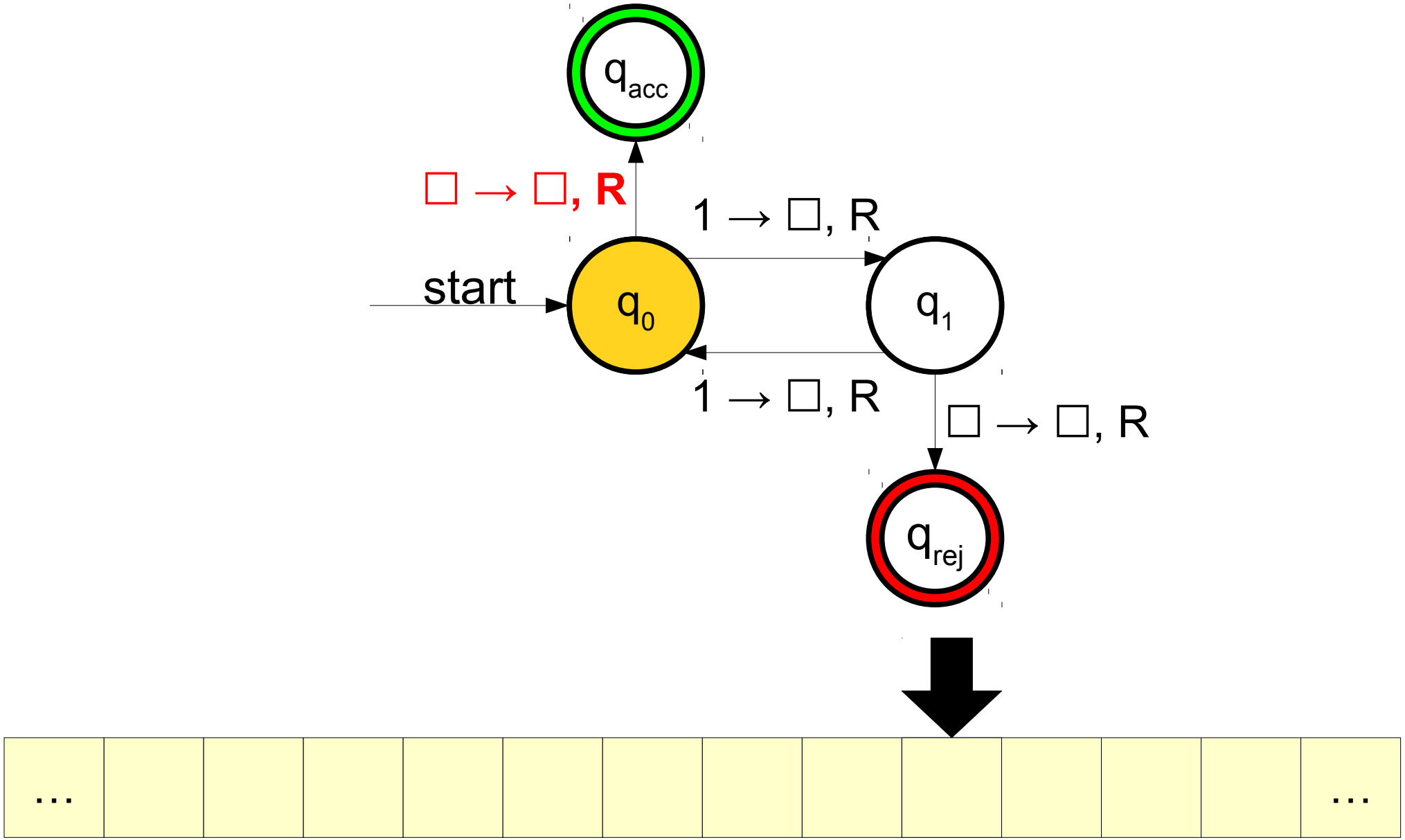

A Simple Turing Machine

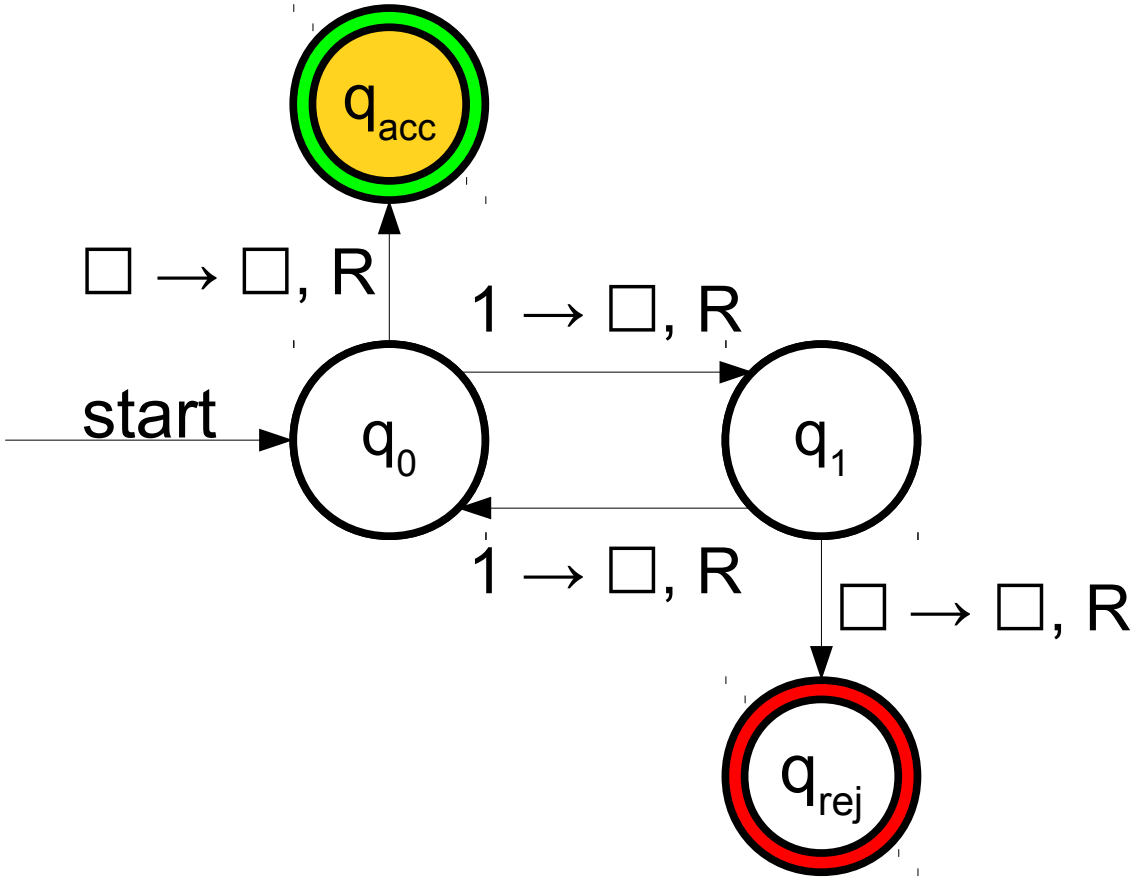

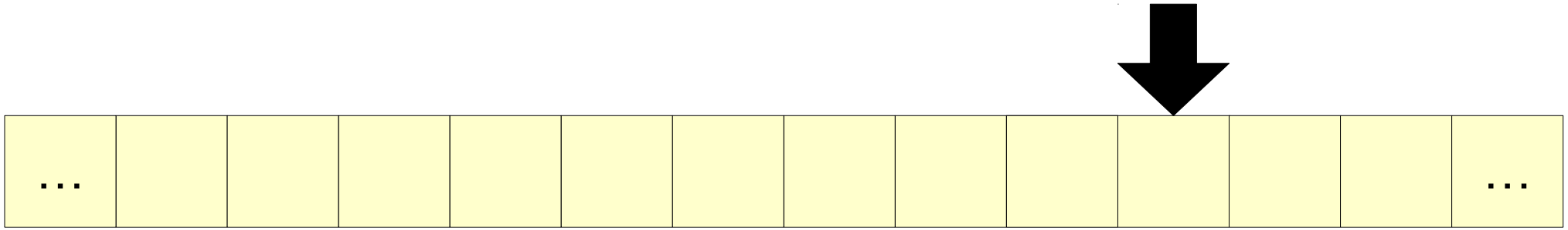

A Simple Turing Machine

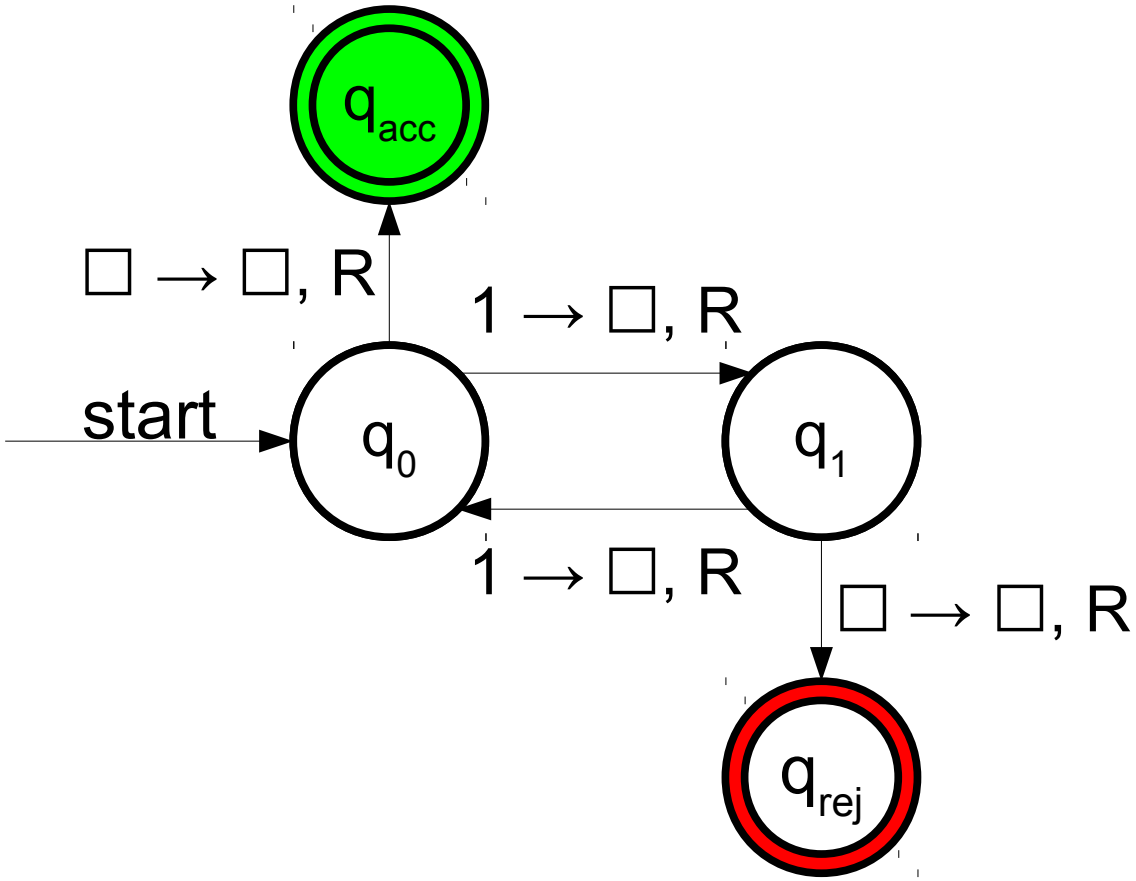

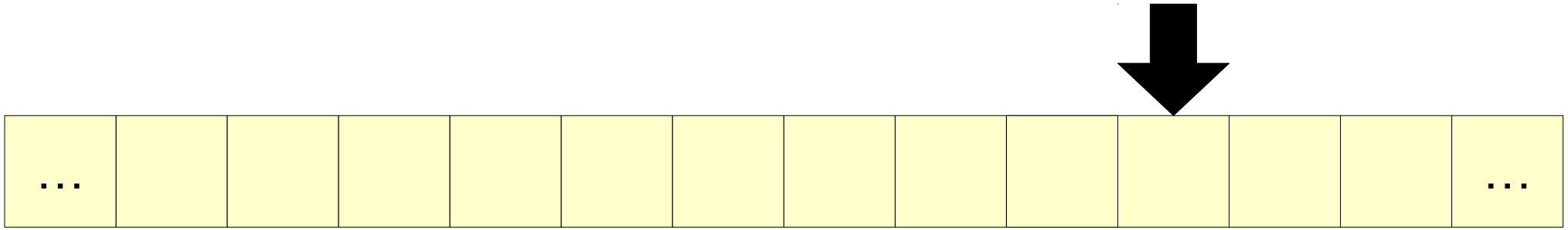

Accepting and Rejecting States

- Unlike DFAs, Turing machines do not stop processing the input when they finish reading it.
- Turing machines decide when (and if!) they will accept or reject their input.
- Turing machines can enter infinite loops and never accept or reject; more on that later...

Designing Turing Machines

- Despite their simplicity, Turing machines are very powerful computing devices.
- Today's lecture explores how to design Turing machines for various languages.

Designing Turing Machines

- Let $\Sigma = \{\mathtt{0}, \mathtt{1}\}$ and consider the language $L = \{\mathtt{0}^n\mathtt{1}^n \mid n \in \mathbb{N}\}$.
- We know that L is context-free.
- How might we build a Turing machine for it?

$$L = \{ \mathtt{0}^n \mathtt{1}^n \mid n \in \mathbb{N} \}$$

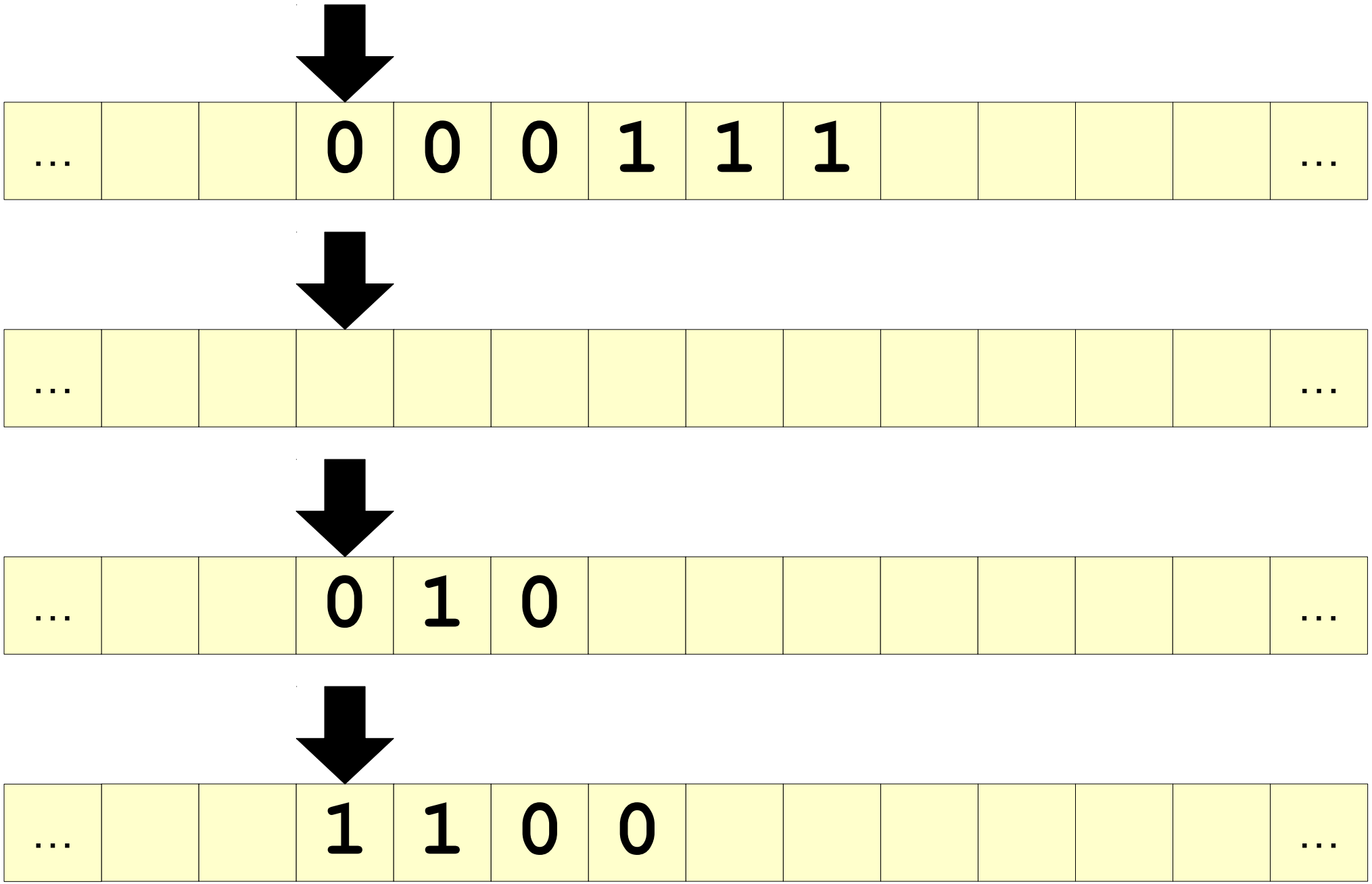

A Recursive Approach

- The string ε is in L.
- The string `0`w`1` is in L iff w is in L.
- Any string starting with `1` is not in L.
- Any string ending with `0` is not in L.

A Sketch of the TM

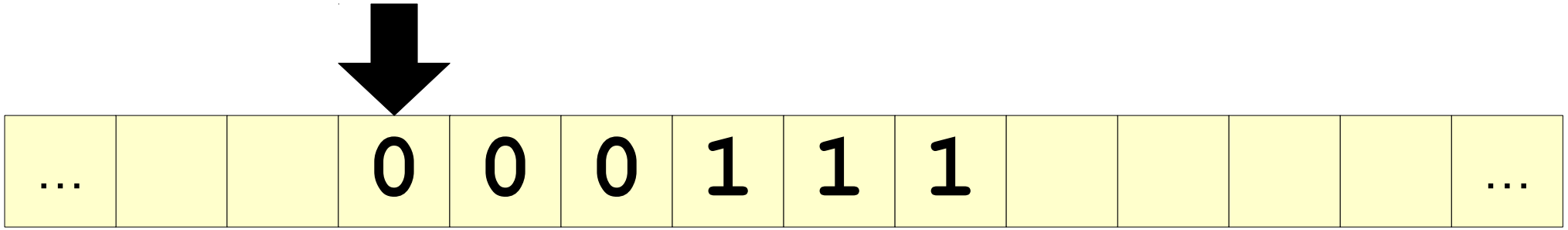

A Sketch of the TM

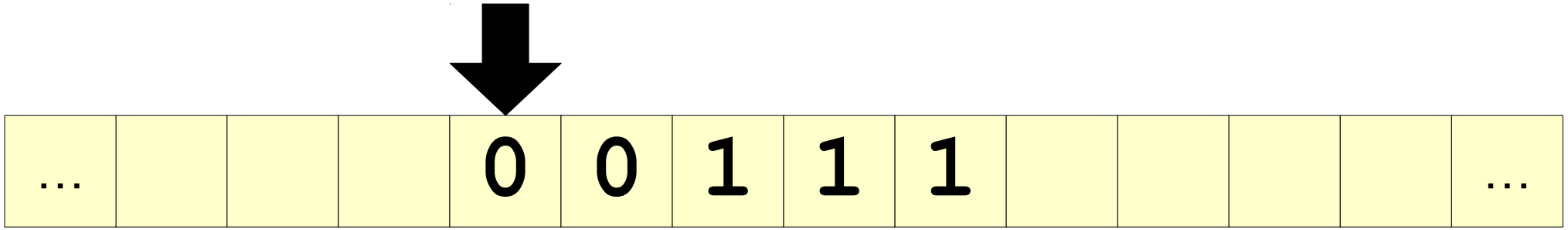

A Sketch of the TM

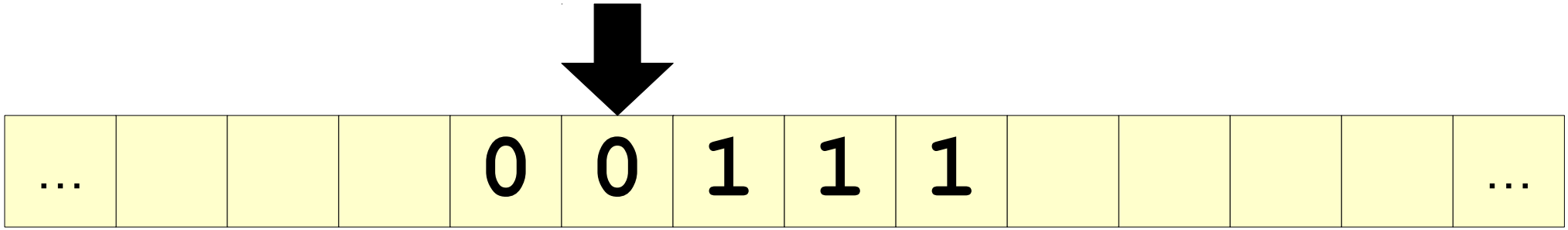

A Sketch of the TM

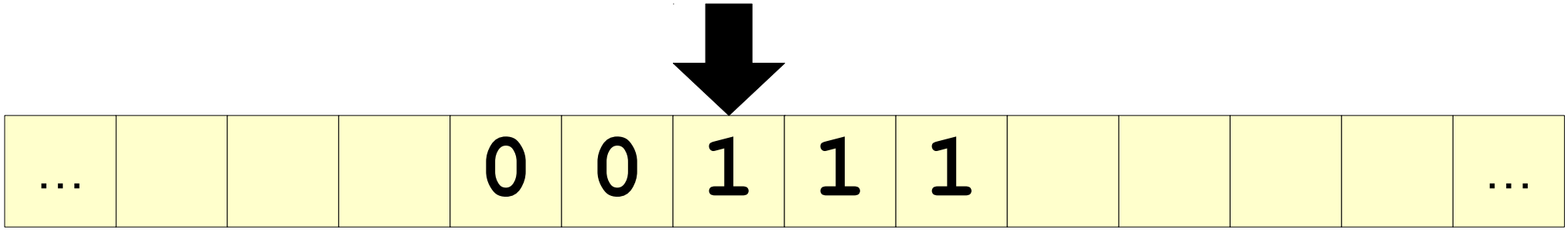

A Sketch of the TM

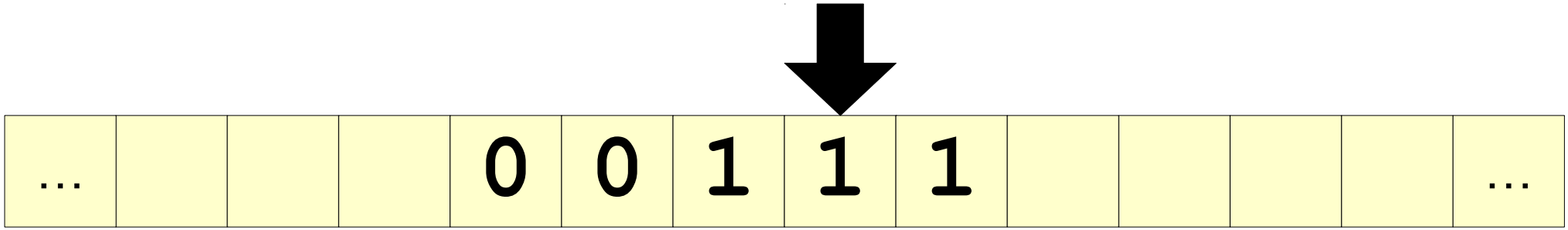

A Sketch of the TM

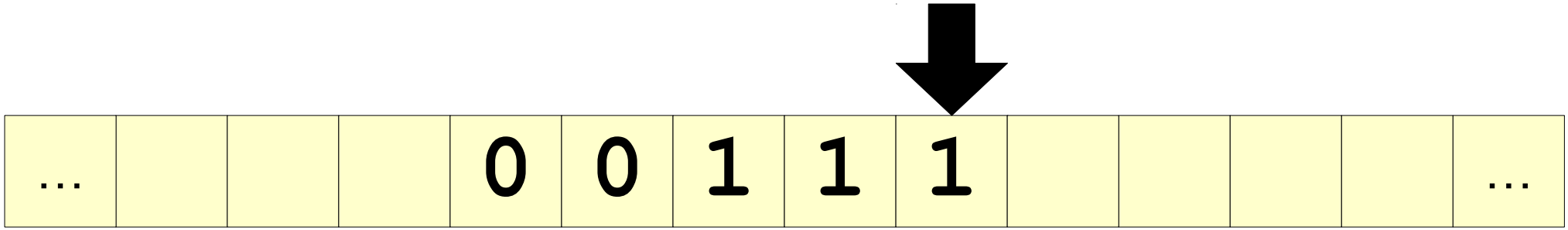

A Sketch of the TM

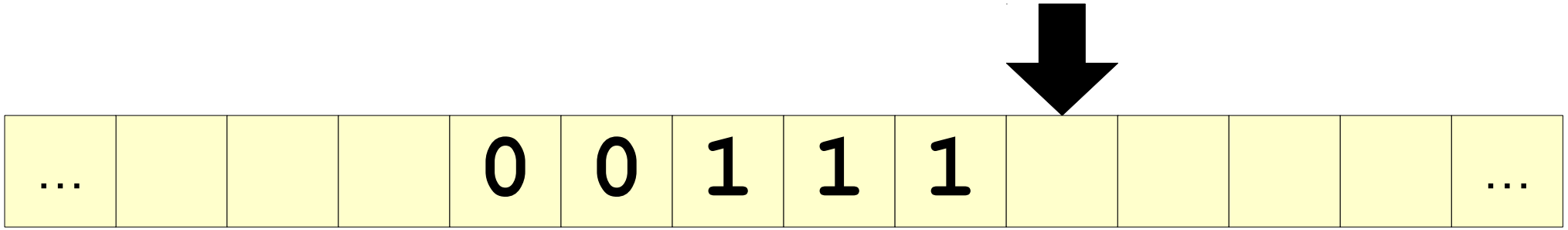

A Sketch of the TM

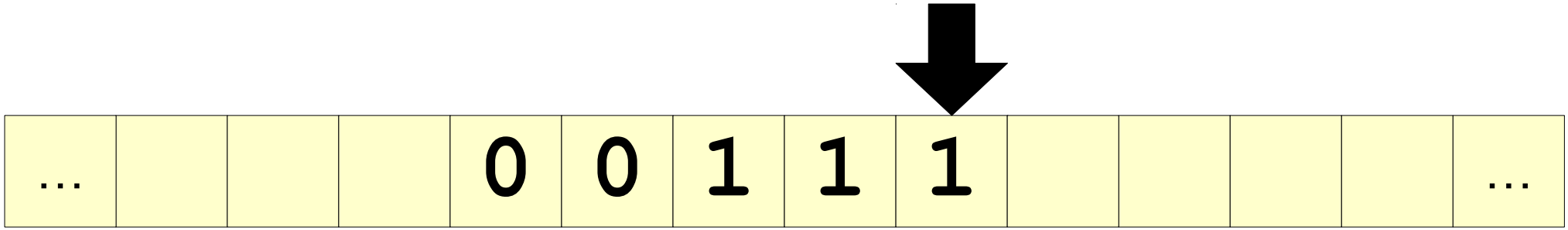

A Sketch of the TM

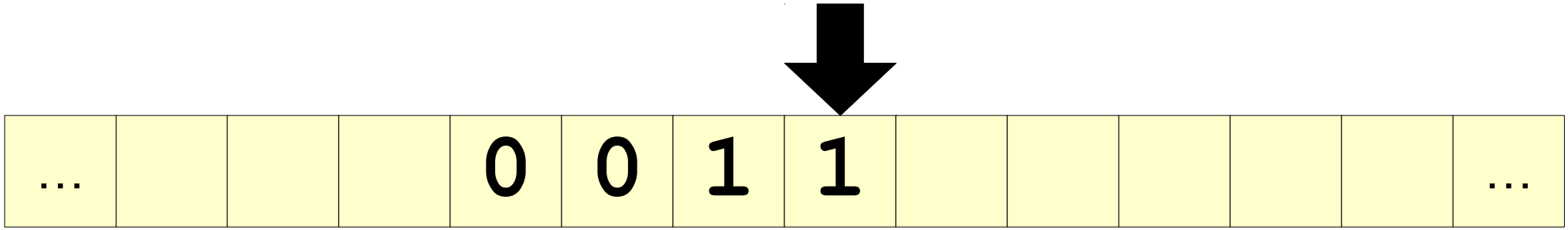

A Sketch of the TM

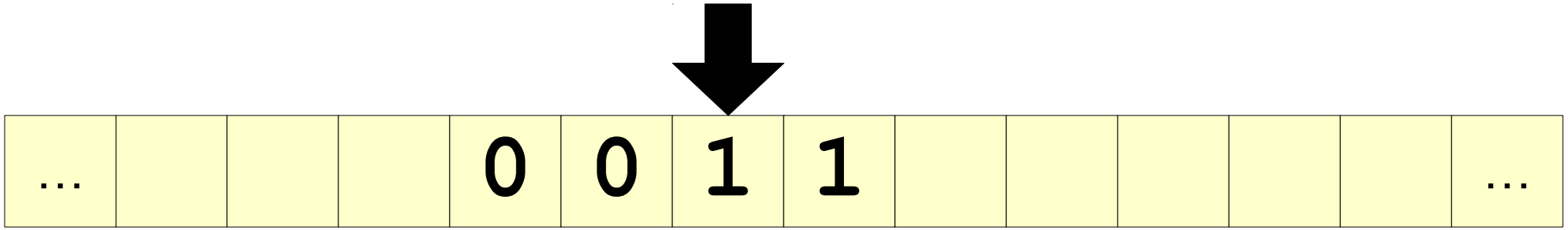

A Sketch of the TM

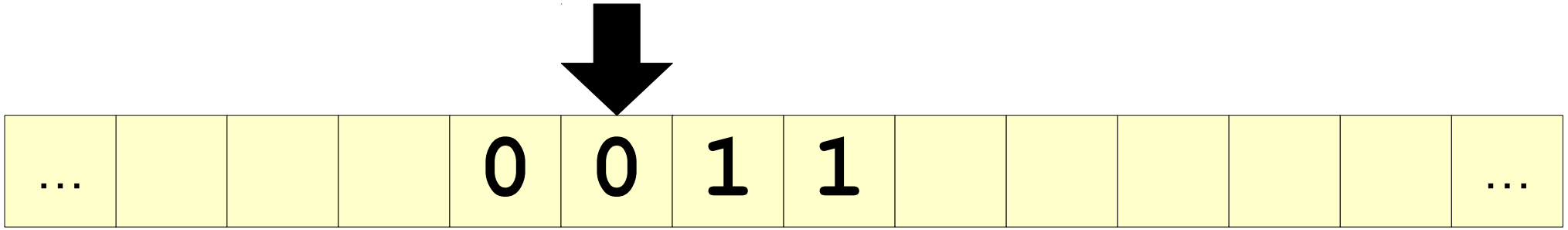

A Sketch of the TM

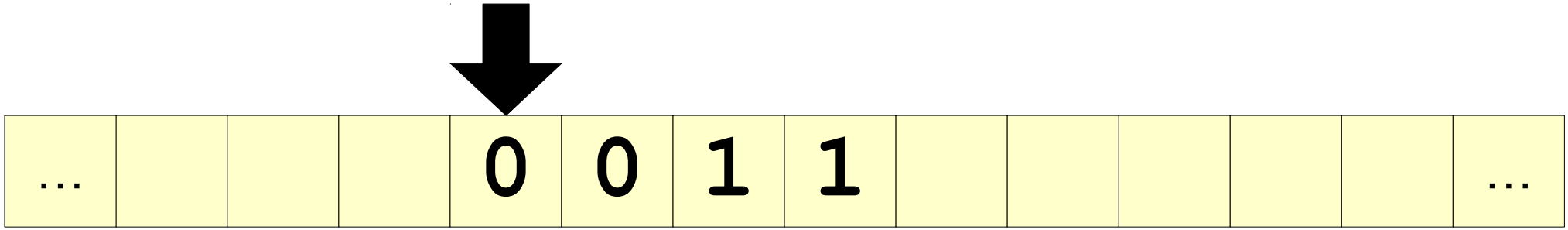

A Sketch of the TM

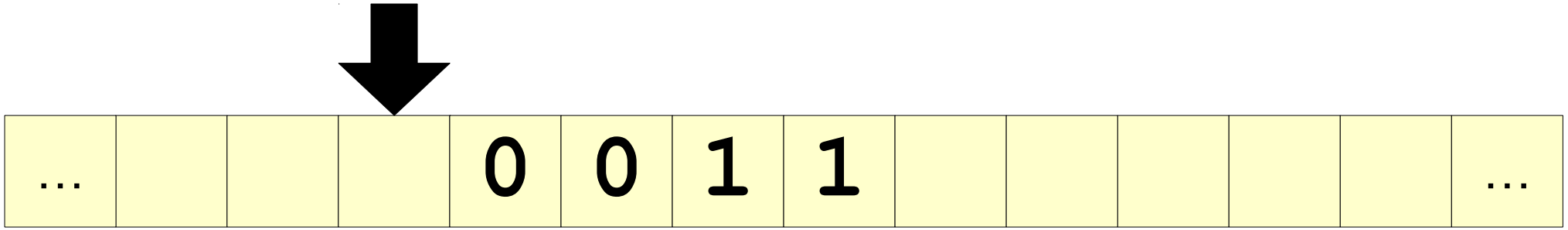

A Sketch of the TM

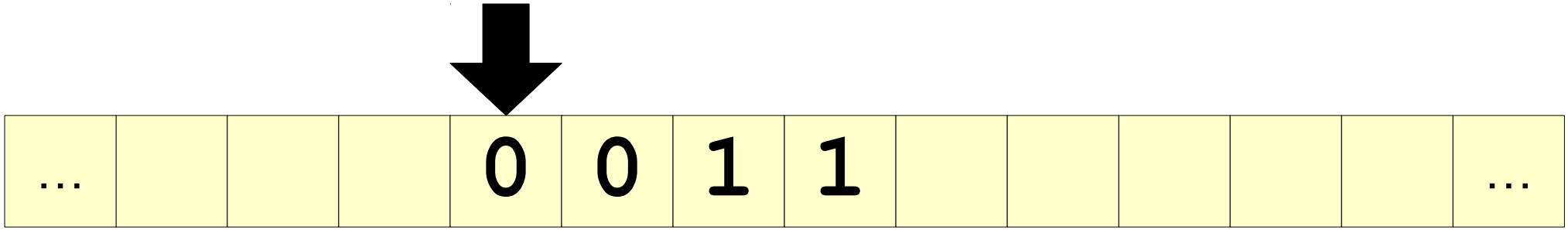

A Sketch of the TM

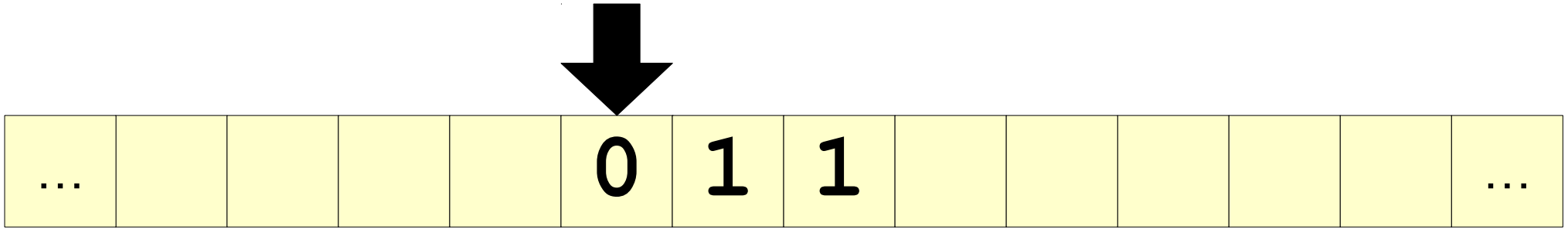

A Sketch of the TM

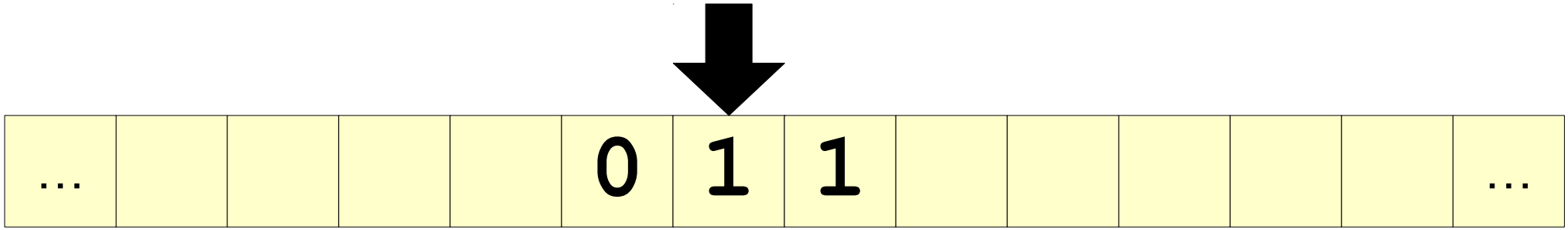

A Sketch of the TM

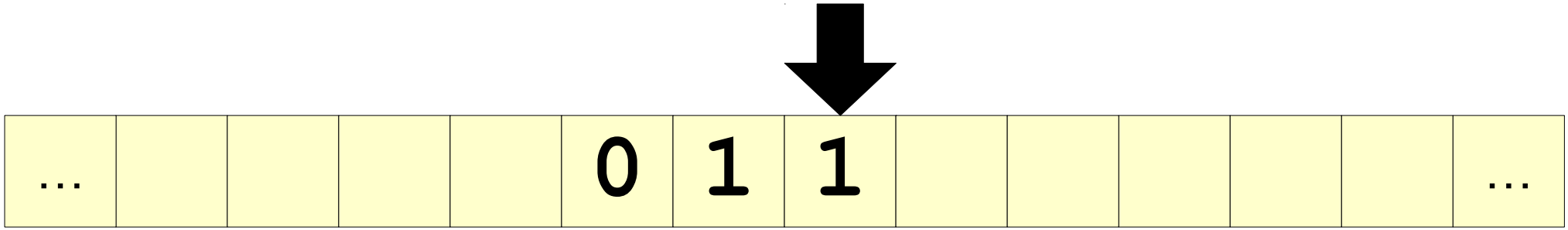

A Sketch of the TM

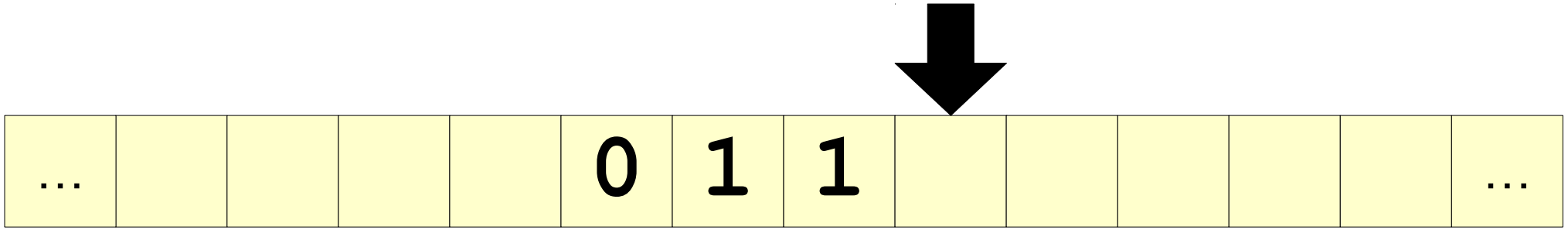

A Sketch of the TM

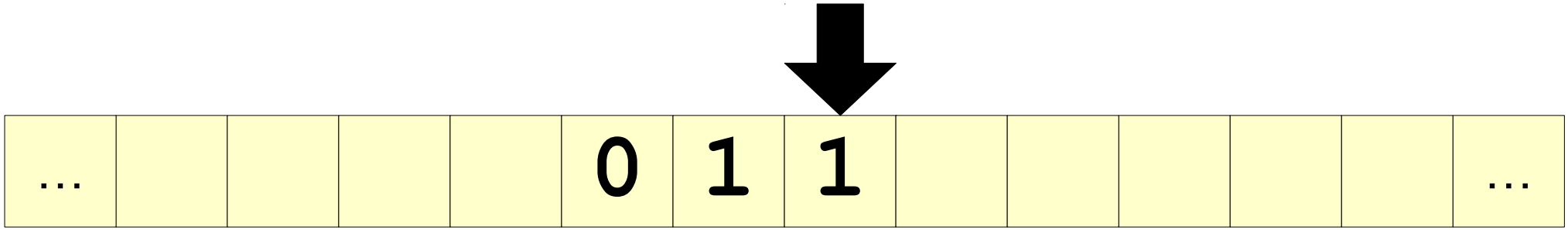

A Sketch of the TM

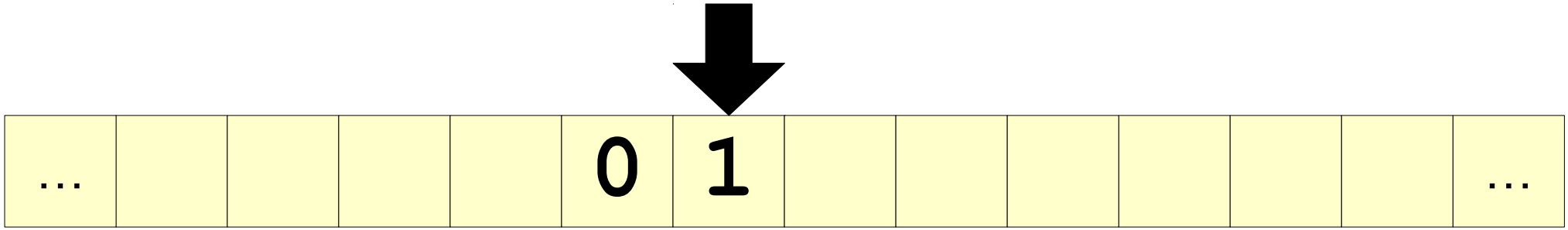

A Sketch of the TM

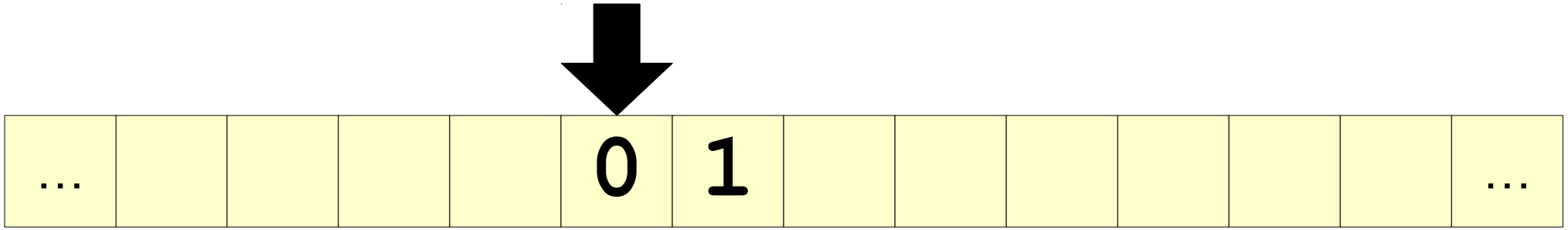

A Sketch of the TM

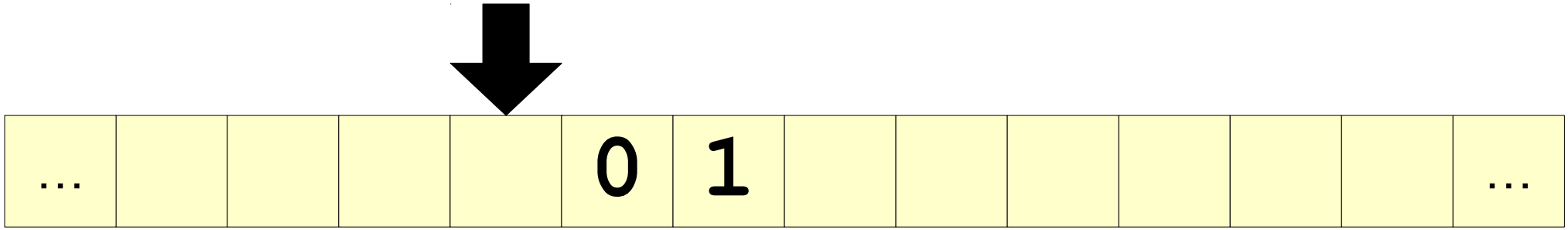

A Sketch of the TM

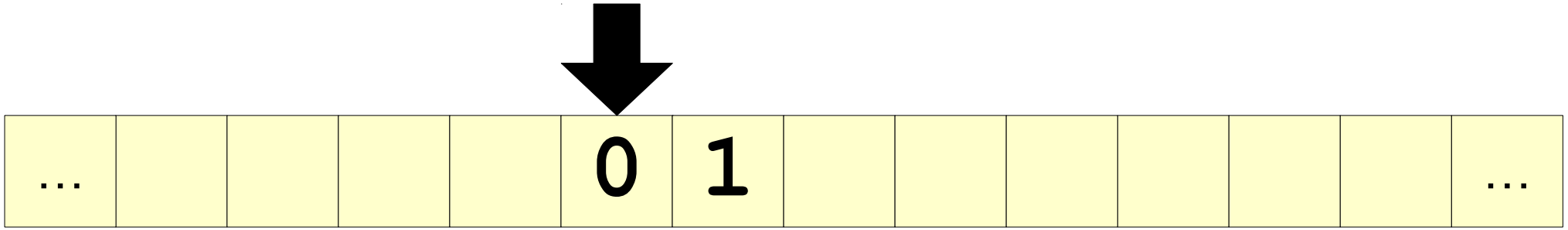

A Sketch of the TM

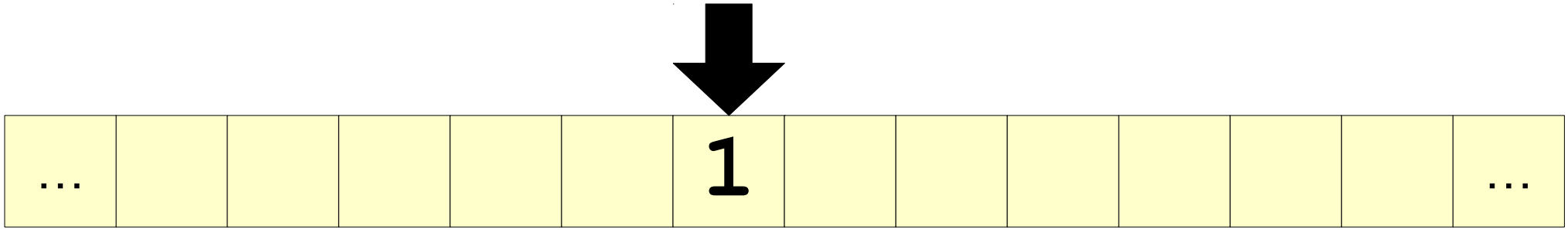

A Sketch of the TM

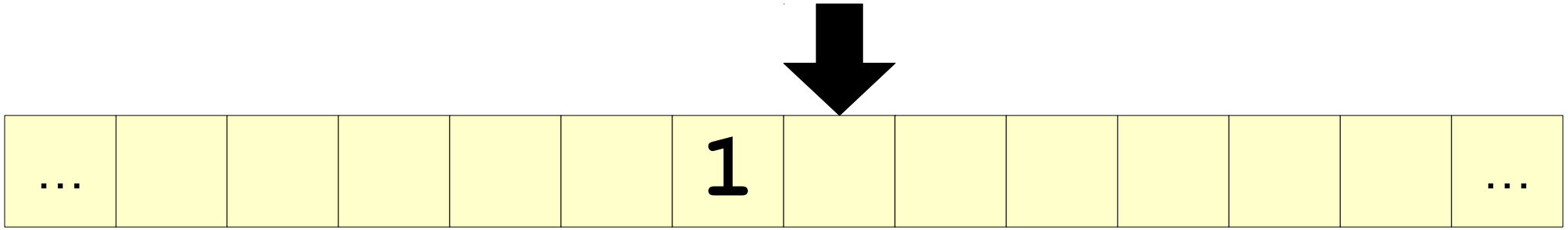

A Sketch of the TM

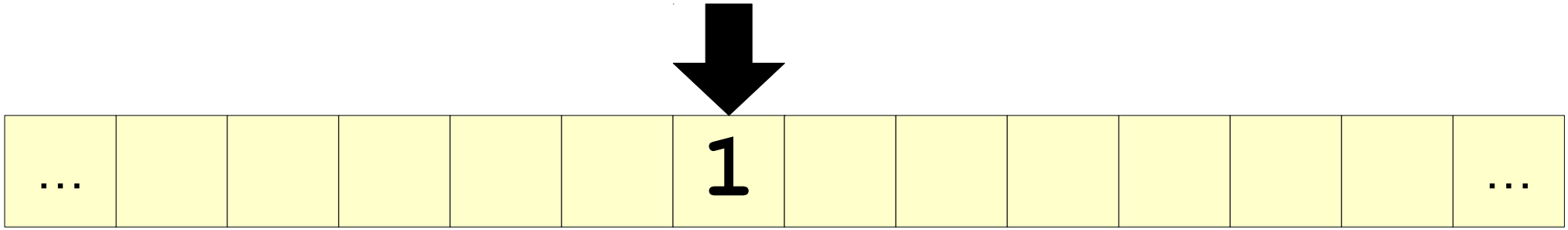

A Sketch of the TM

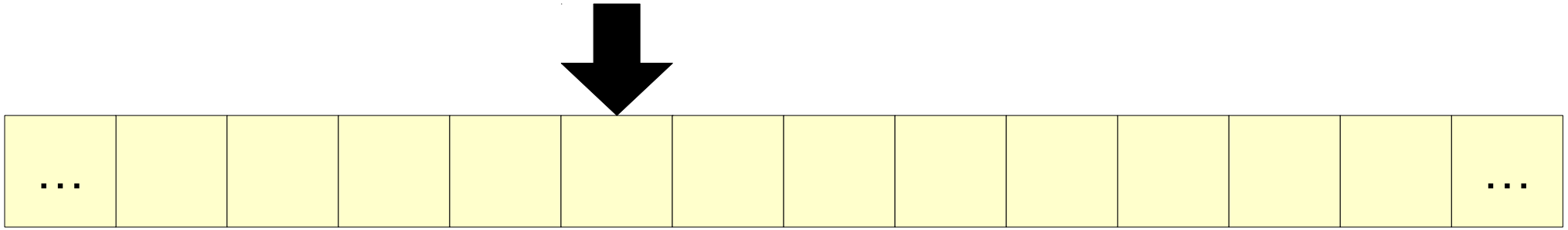

A Sketch of the TM

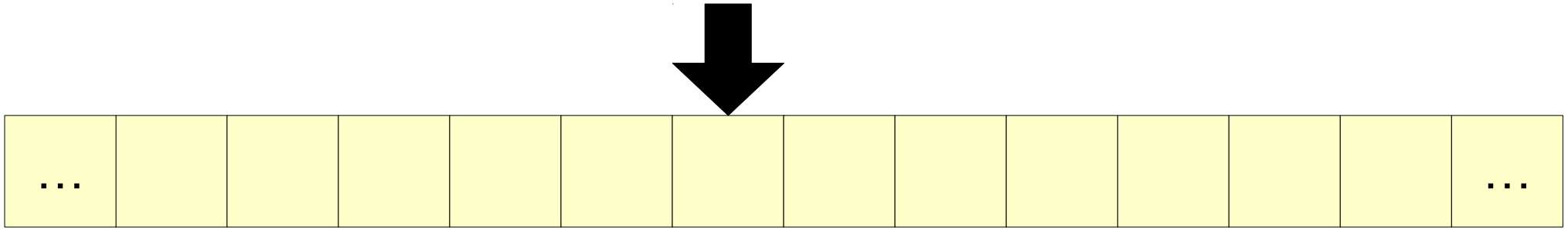

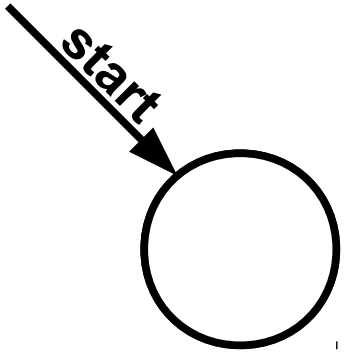
start

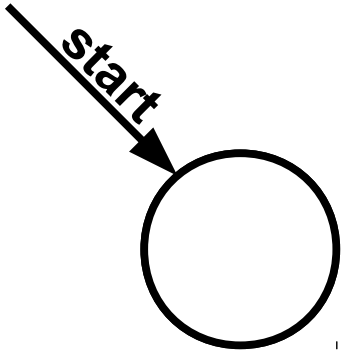
start

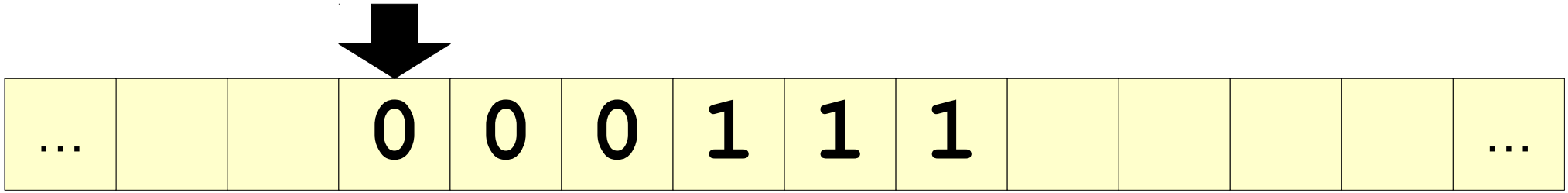
...
0
0
0
1
1
1
...

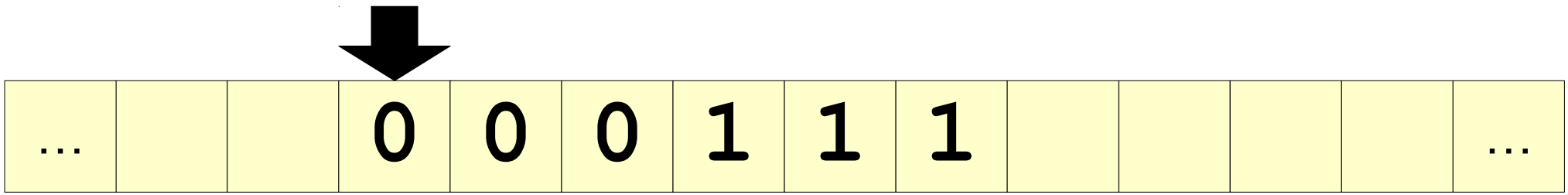
start
...
0
0
0
1
1
1
...

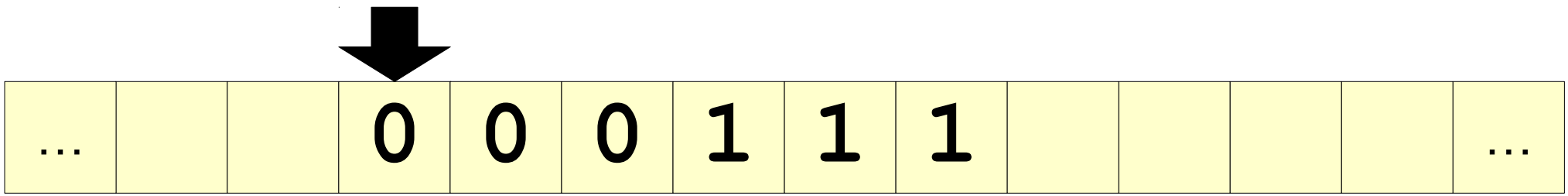
start
Check for 0
...
0
0
0
1
1
1
...

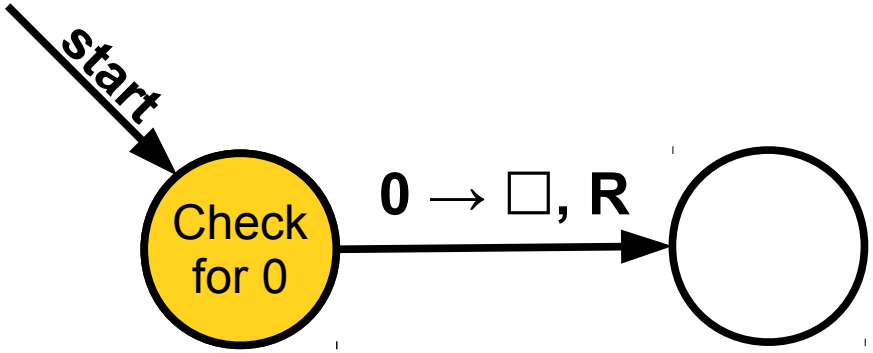
start
Check for 0
0 → □, R

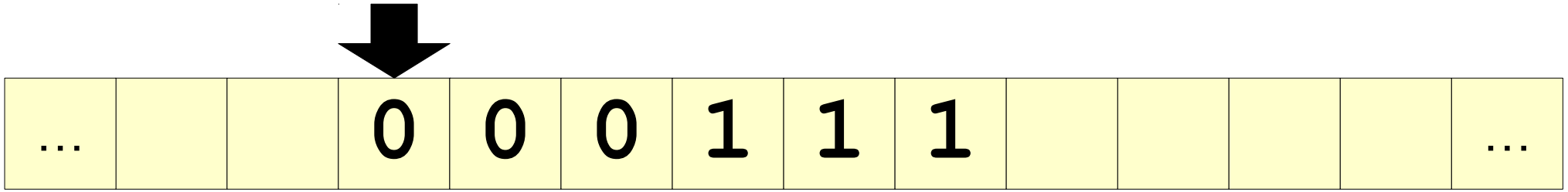
...
0 0 0 1 1 1
...

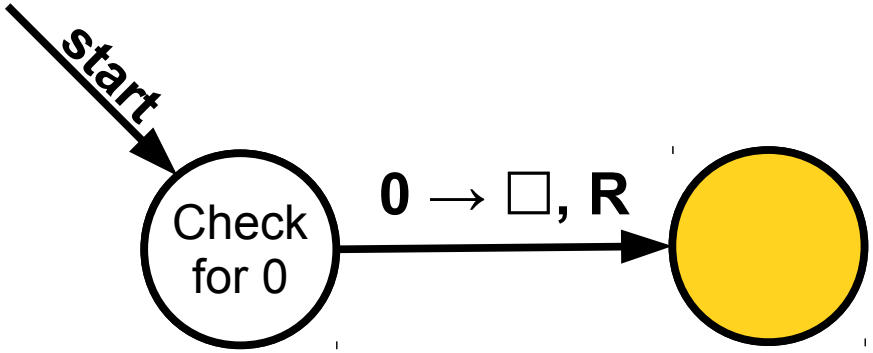
start
Check for 0
0 → □, R

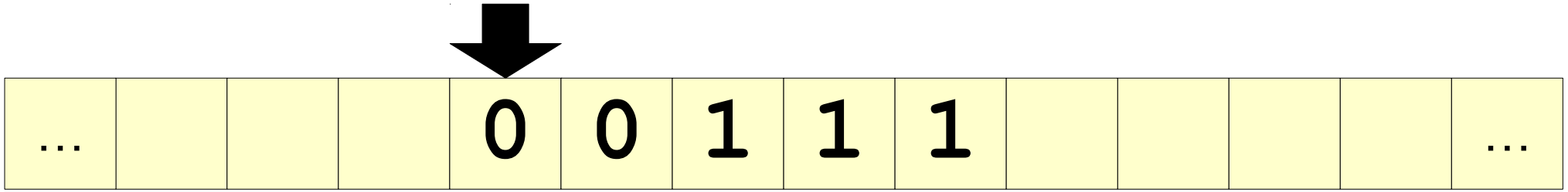
...
0 0 1 1 1
...

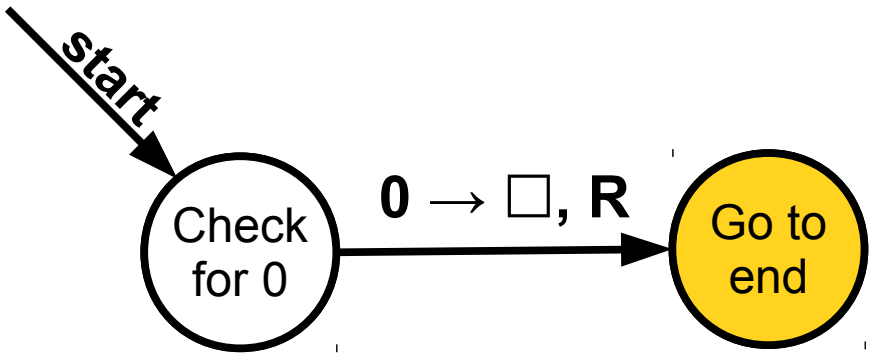
start
Check for 0
0 → □, R
Go to end

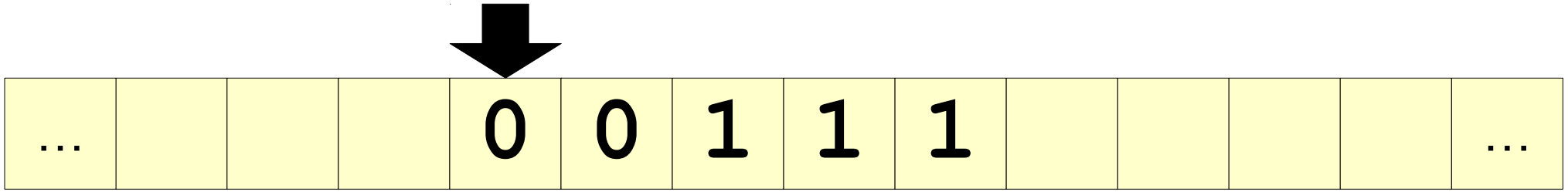
...
0 0 1 1 1
...

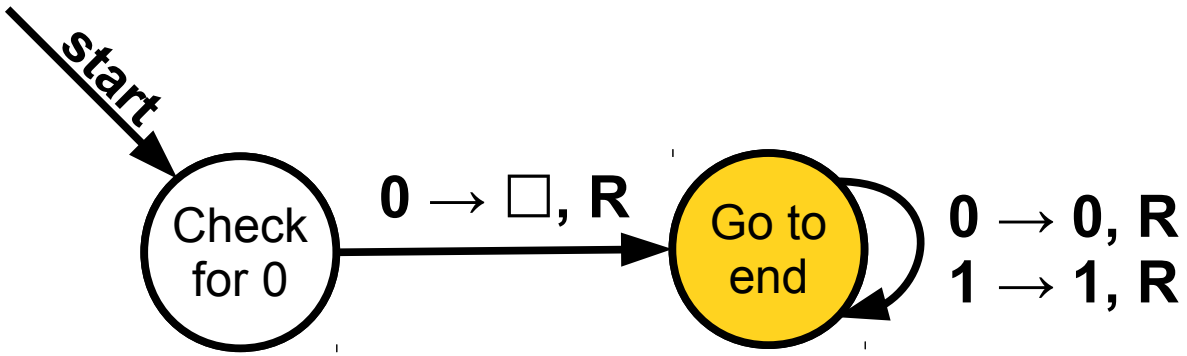
start
Check for 0
0 → □, R
Go to end
0 → 0, R
1 → 1, R

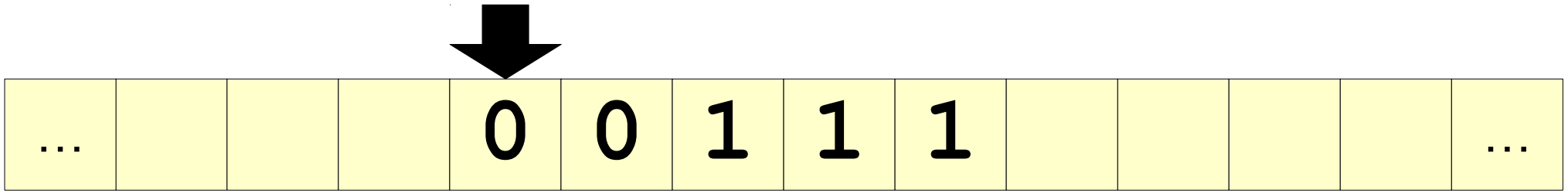
...
0 0 1 1 1
...

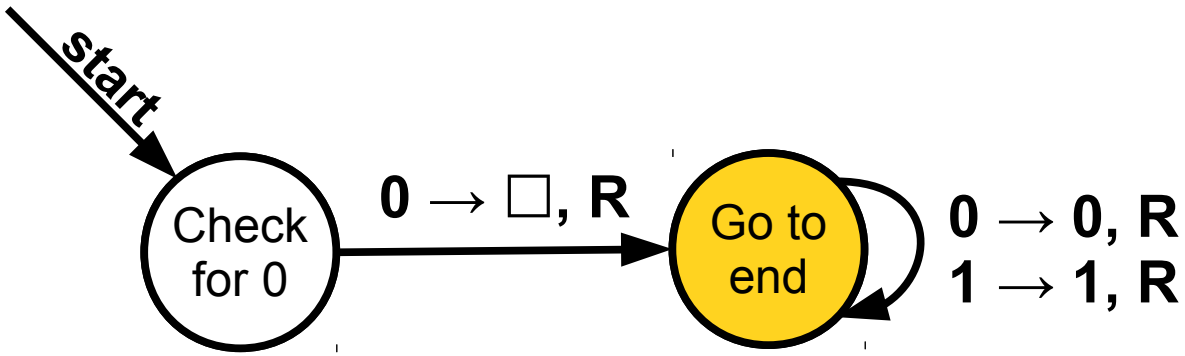
start
Check for 0
0 → □, R
Go to end
0 → 0, R
1 → 1, R

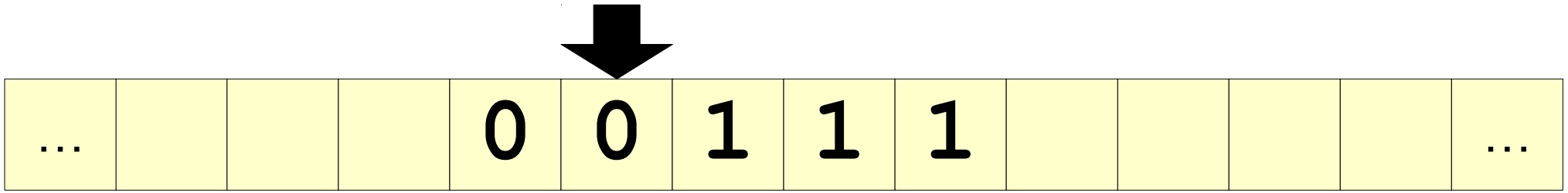
...
0 0 1 1 1
...

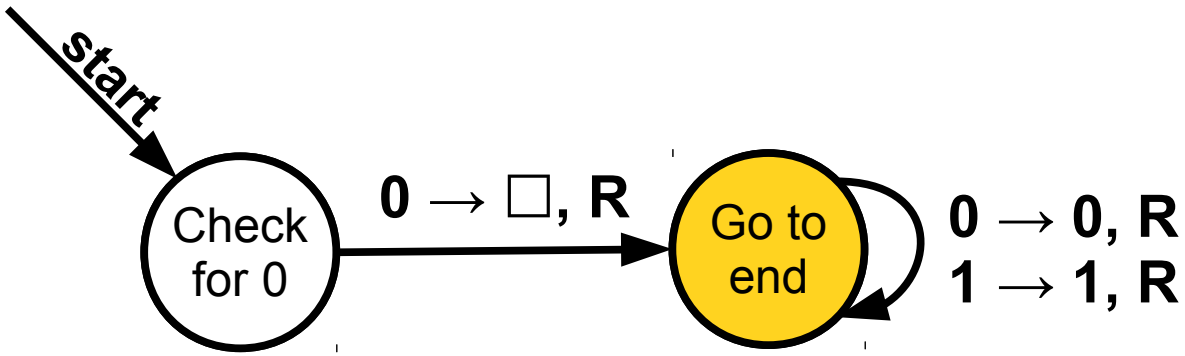
start
Check for 0
0 → □, R
Go to end
0 → 0, R
1 → 1, R

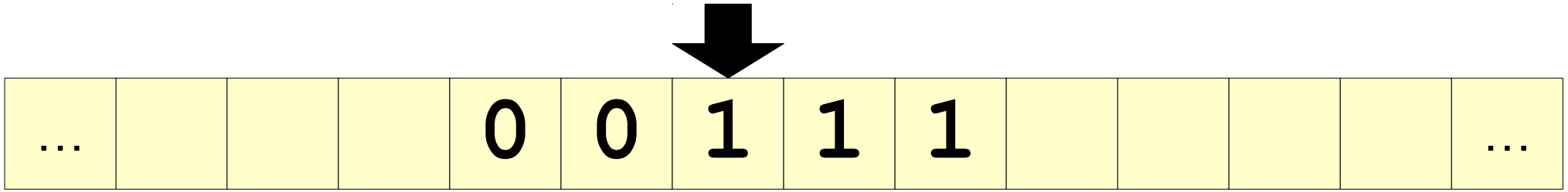
...
0 0 1 1 1
...

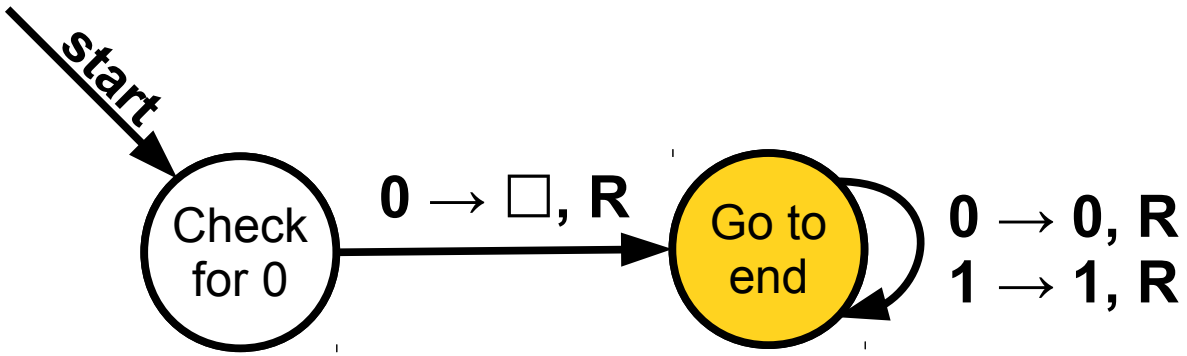
start
Check for 0
0 → □, R
Go to end
0 → 0, R
1 → 1, R

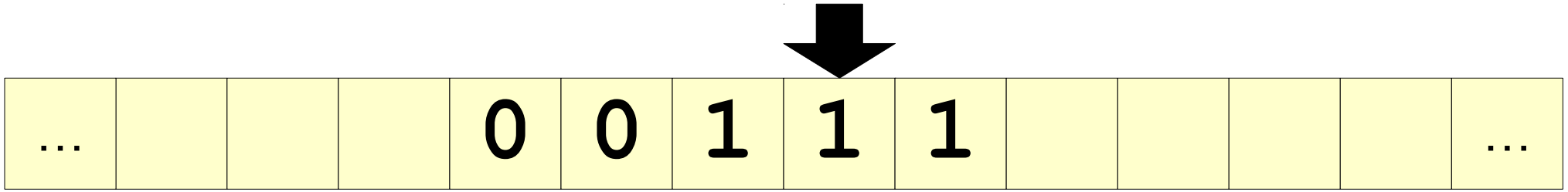
...
0 0 1 1 1
...

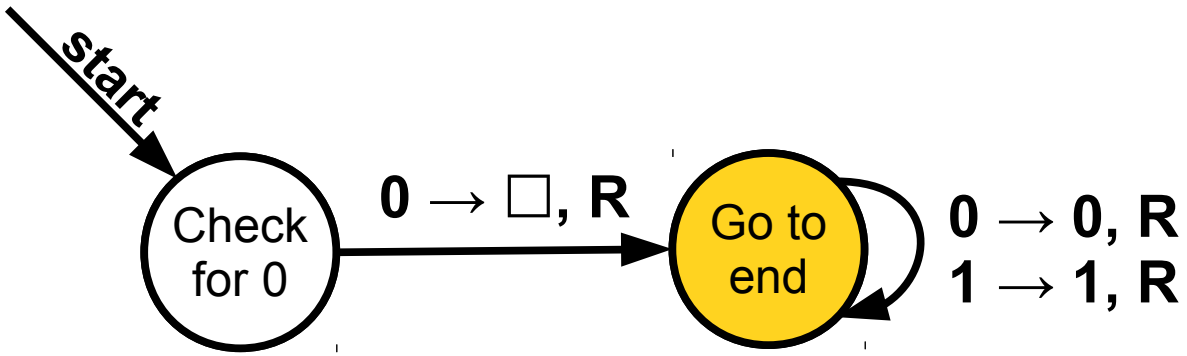
start
Check for 0
0 → □, R
Go to end
0 → 0, R
1 → 1, R

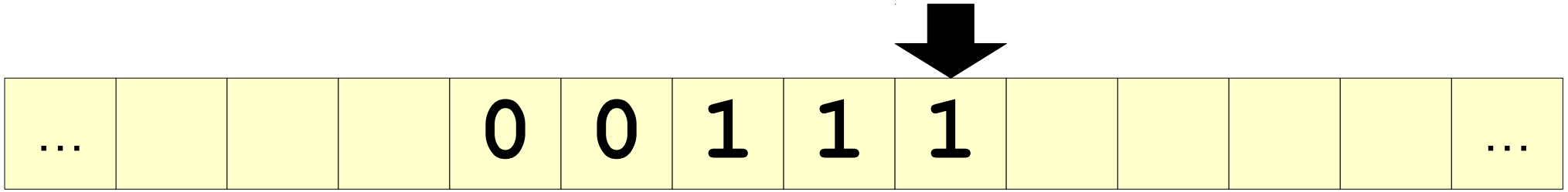
...
0 0 1 1 1
...

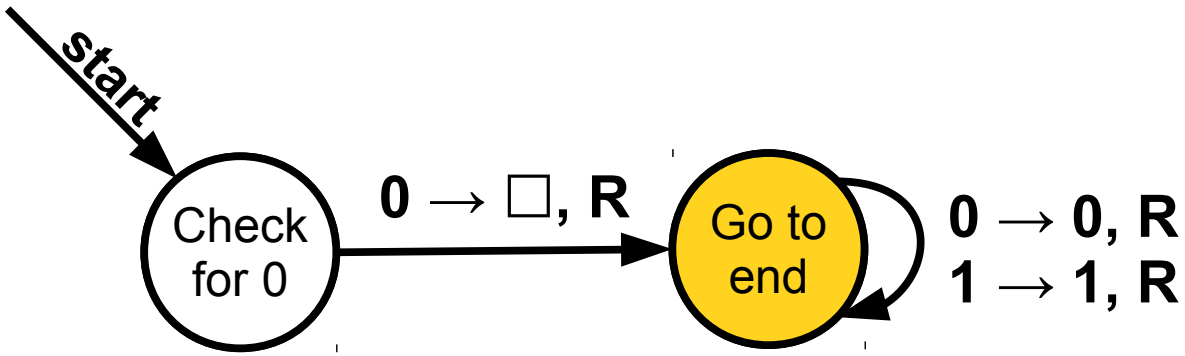
start
Check for 0
0 → □, R
Go to end
0 → 0, R
1 → 1, R

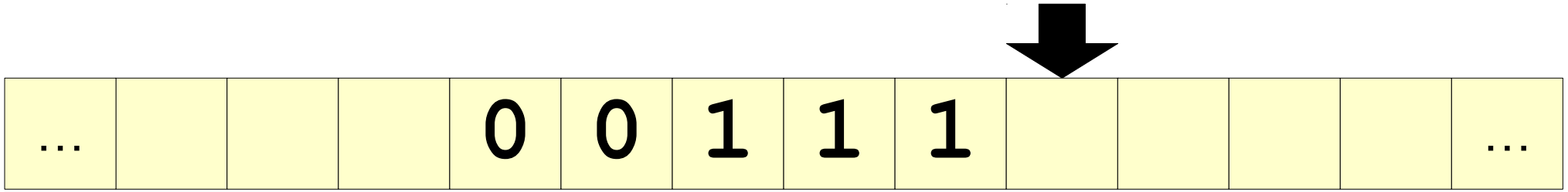
...
0 0 1 1 1
...

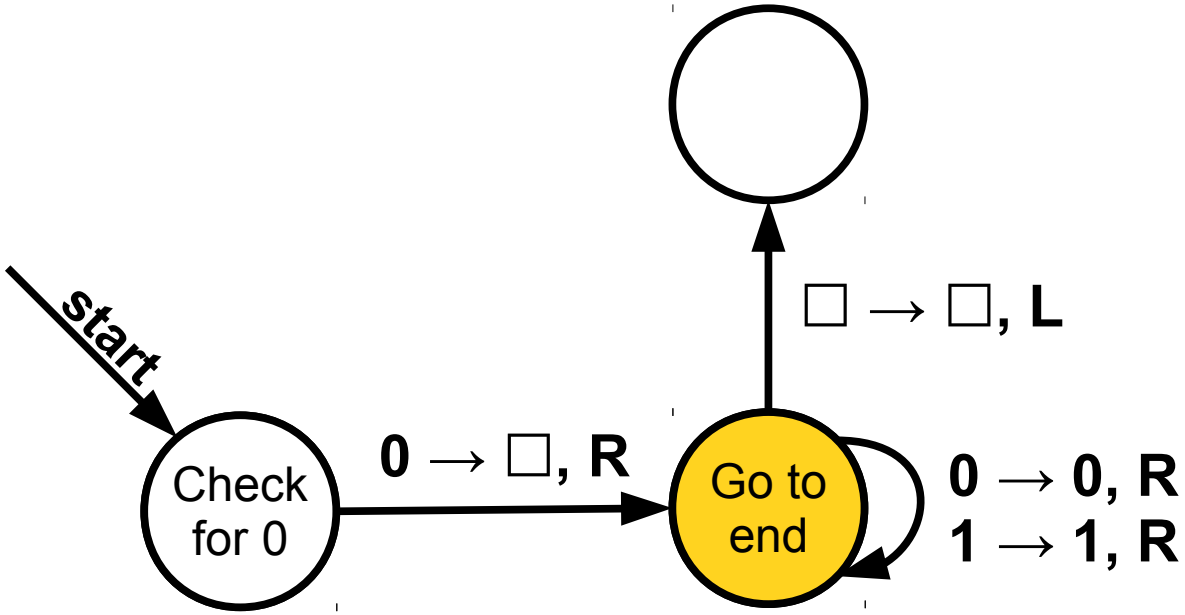
start
Check for 0
0 → □, R
Go to end
□ → □, L
0 → 0, R
1 → 1, R

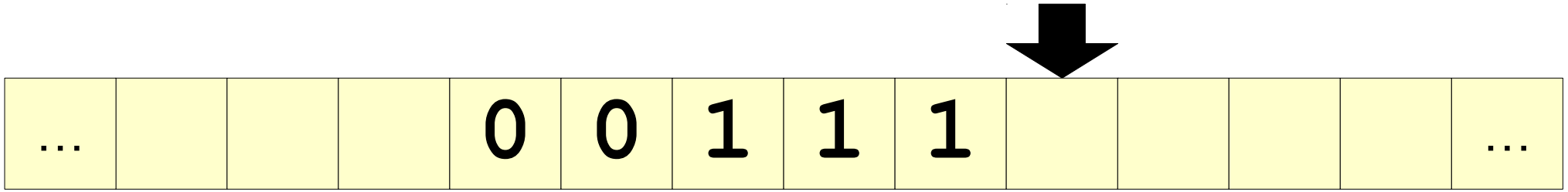
...
0 0 1 1 1
...

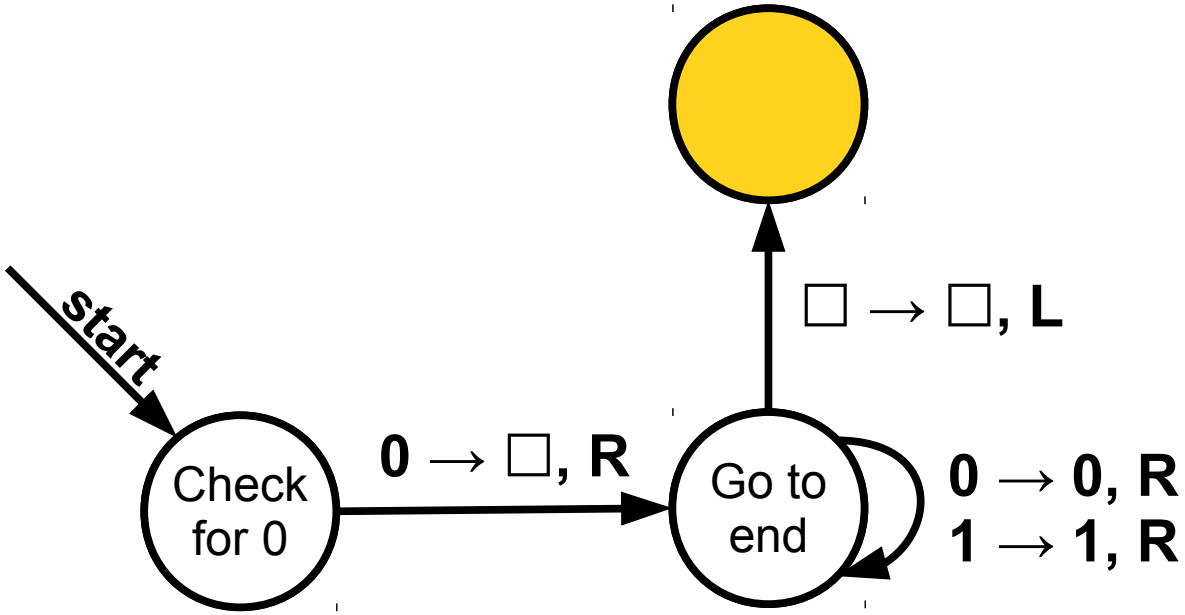
start
Check for 0
0 → □, R
Go to end
□ → □, L
0 → 0, R
1 → 1, R

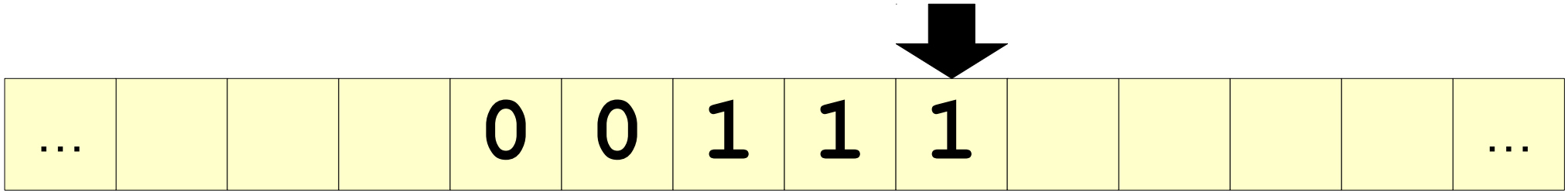
...
0 0 1 1 1
...

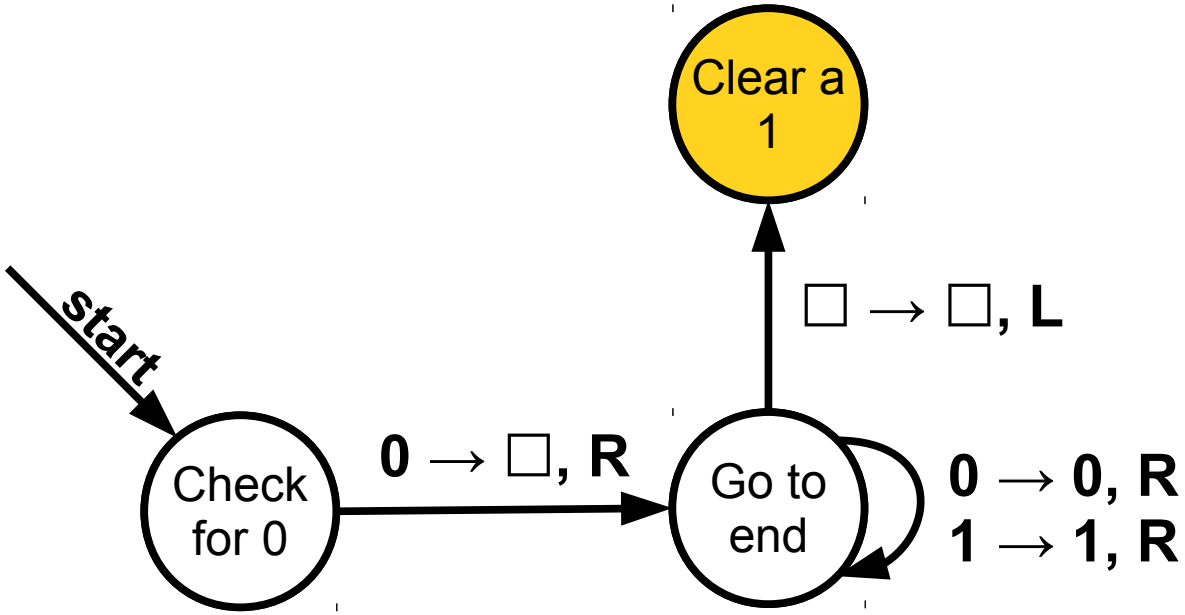
Clear a 1
start
Check for 0
0 → □, R
Go to end
□ → □, L
0 → 0, R
1 → 1, R

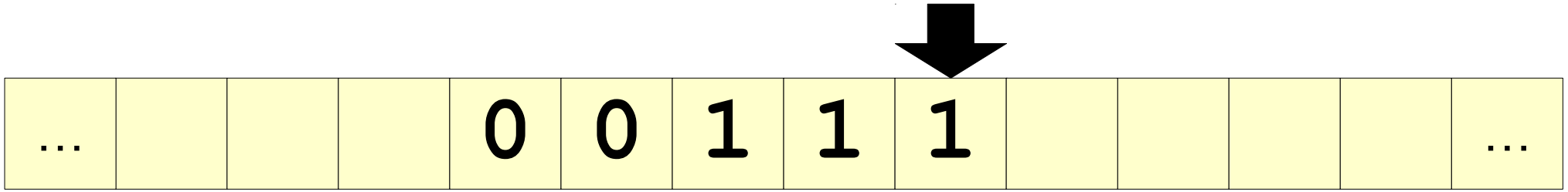
...
0 0 1 1 1
...

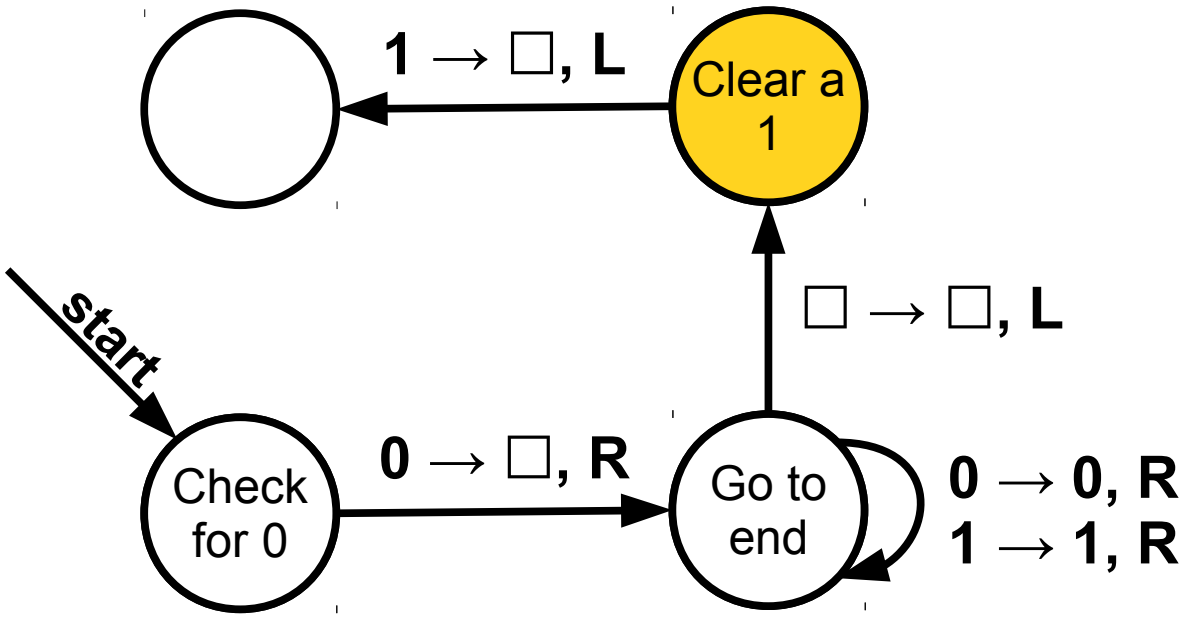
1 → □, L
Clear a 1
start
□ → □, L
Check for 0
0 → □, R
Go to end
0 → 0, R
1 → 1, R

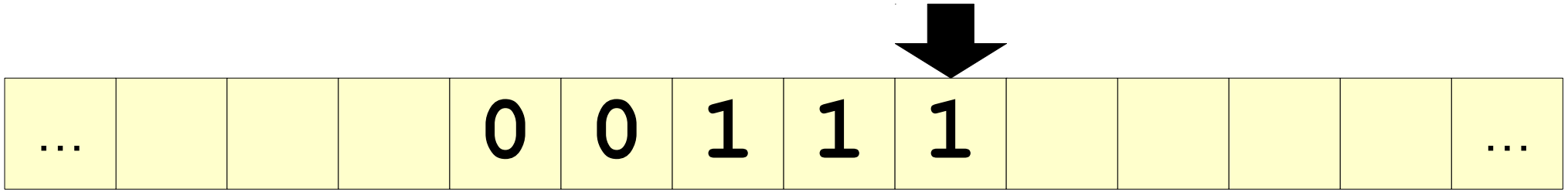
...
0 0 1 1 1
...

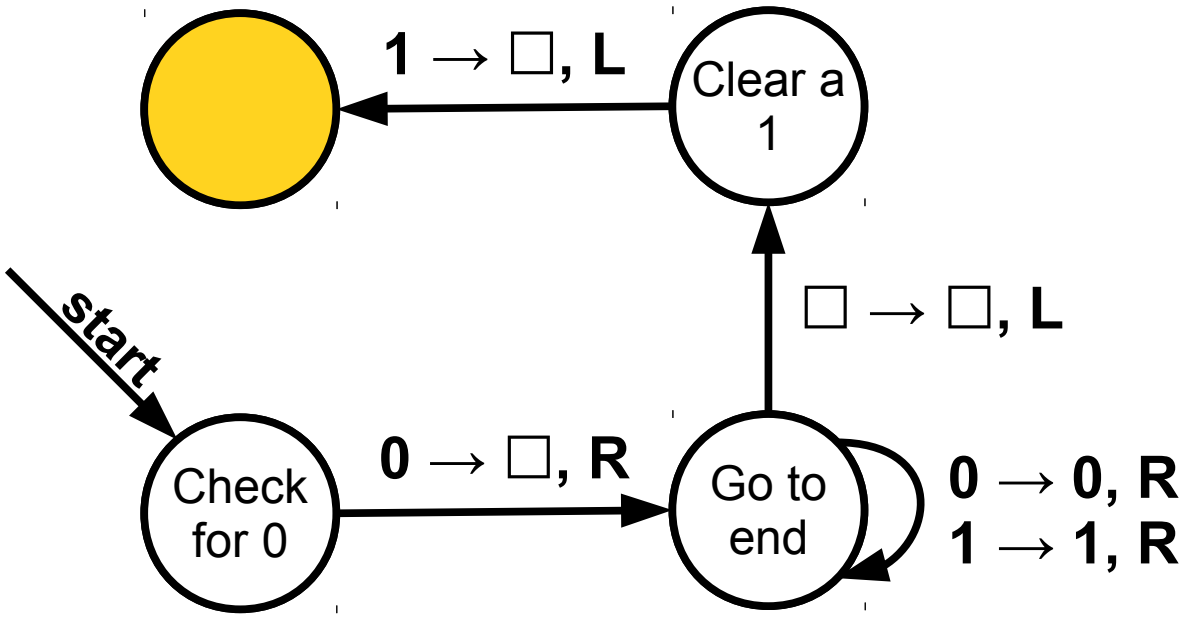
1 → □, L
Clear a 1
start
□ → □, L
Check for 0
0 → □, R
Go to end
0 → 0, R
1 → 1, R

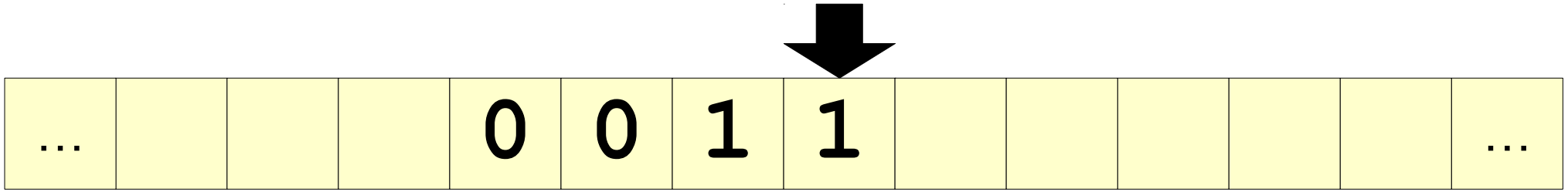
...
0 0 1 1
...

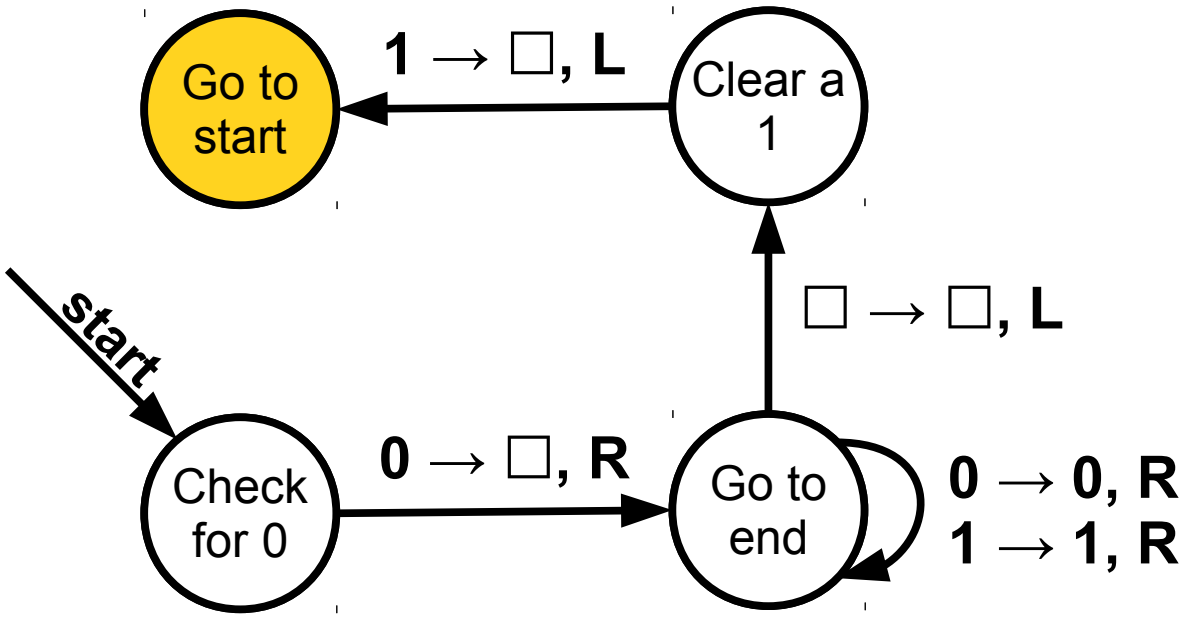
Go to start
1 → □, L
Clear a 1
start
□ → □, L
Check for 0
0 → □, R
Go to end
0 → 0, R
1 → 1, R

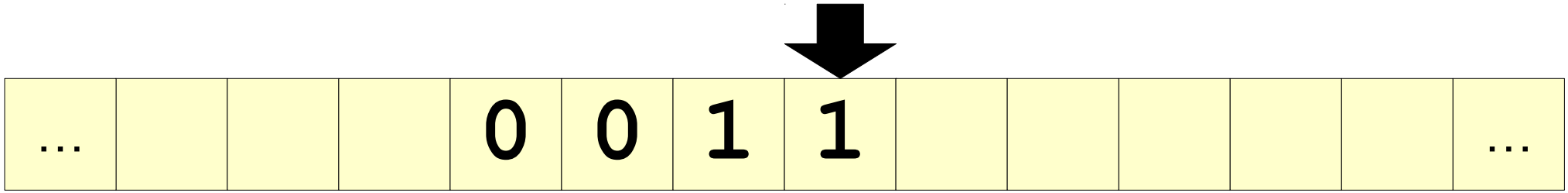
...
0 0 1 1
...

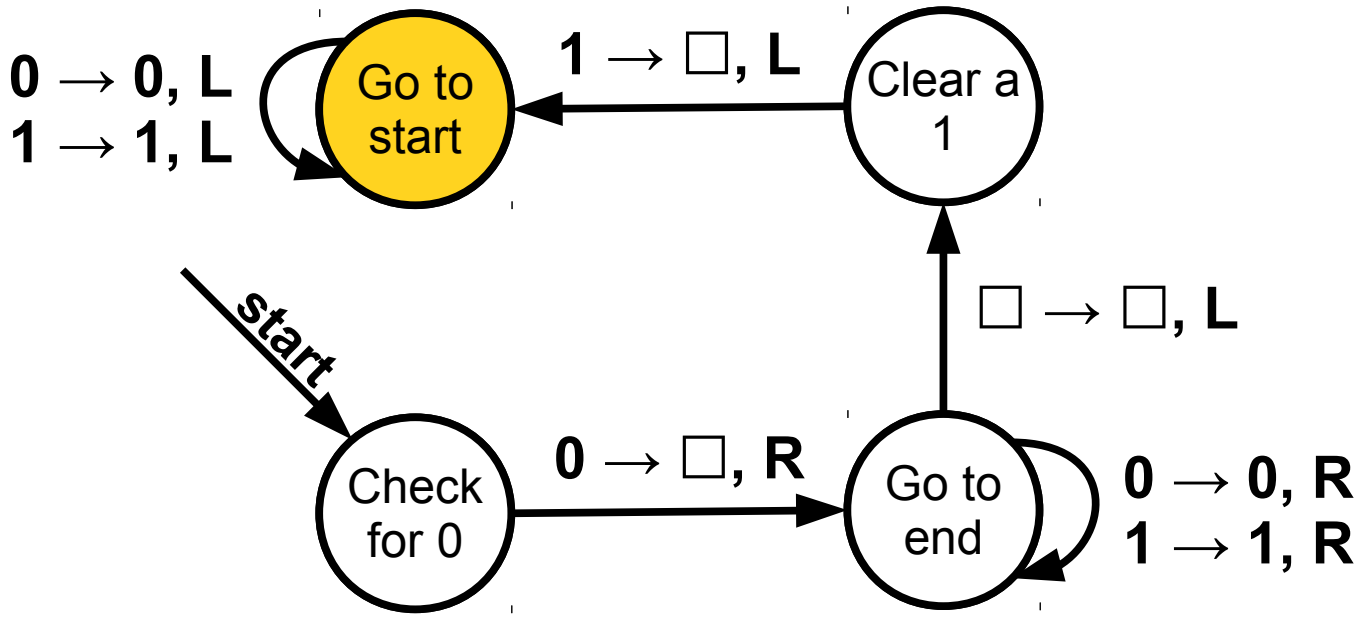
0 → 0, L
1 → 1, L
Go to start
1 → □, L
Clear a 1
start
□ → □, L
Check for 0
0 → □, R
Go to end
0 → 0, R
1 → 1, R

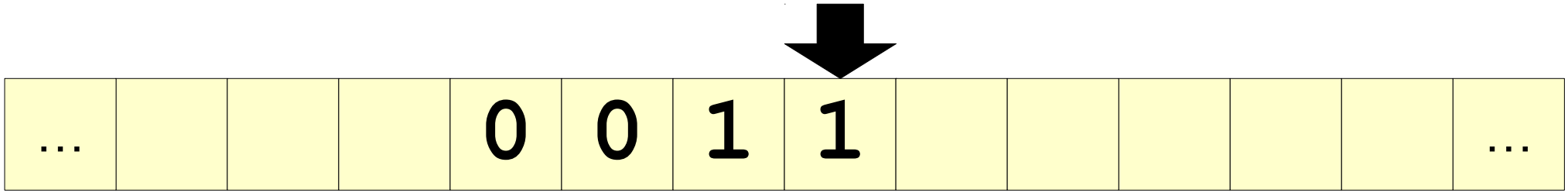
...
0 0 1 1
...

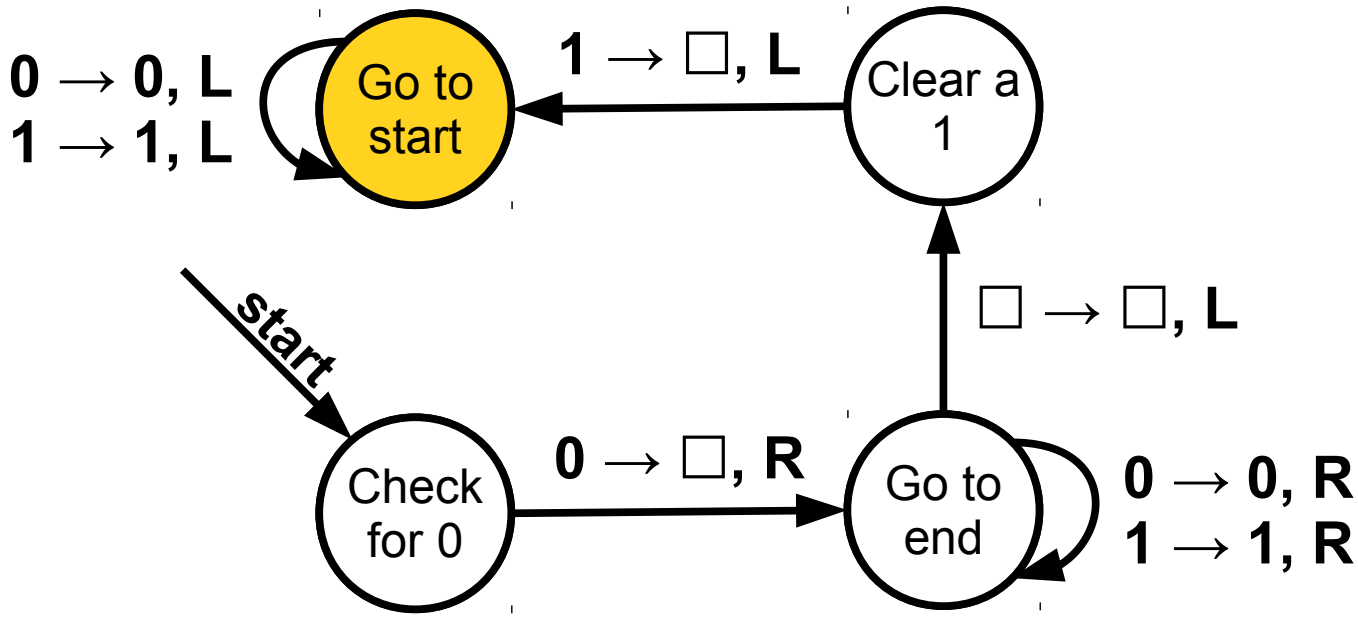
0 → 0, L
1 → 1, L
Go to start
1 → □, L
Clear a 1
start
□ → □, L
Check for 0
0 → □, R
Go to end
0 → 0, R
1 → 1, R

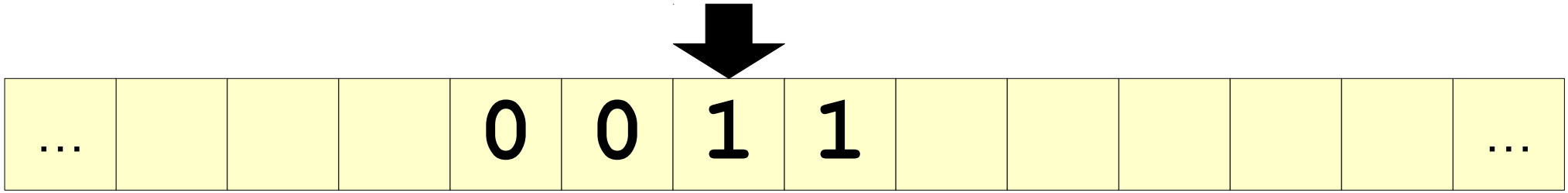
...
0
0
1
1
...

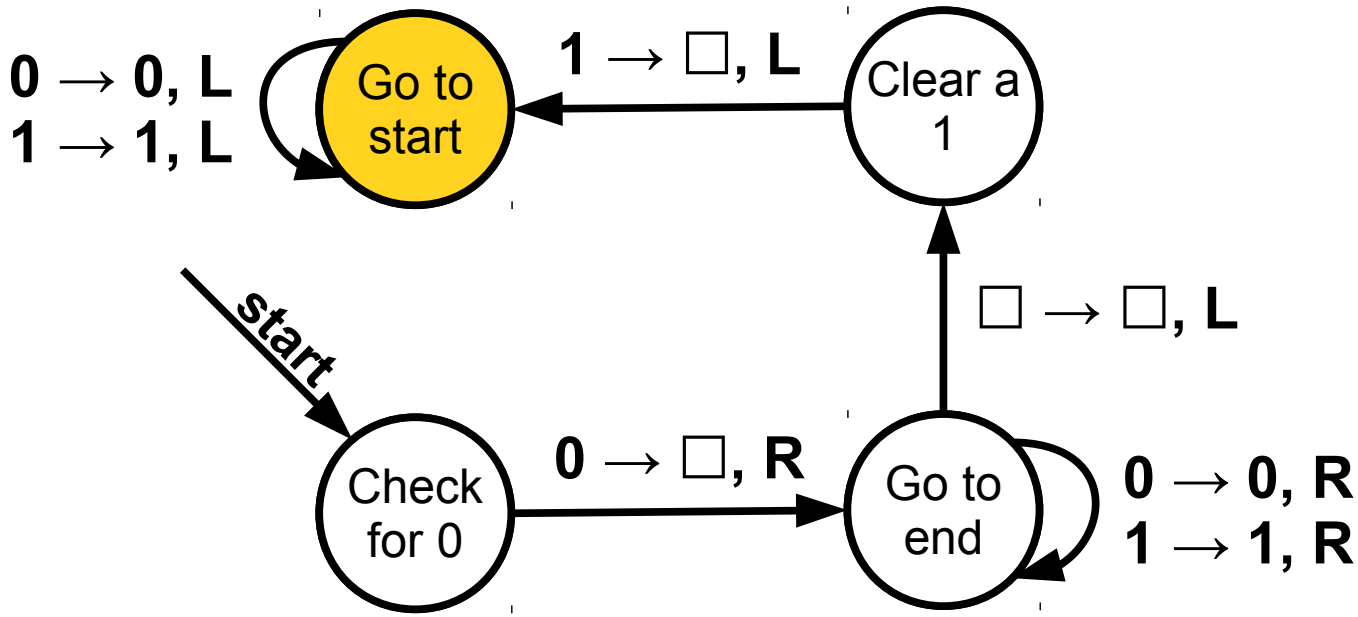
0 → 0, L
1 → 1, L
Go to start
1 → □, L
Clear a 1
start
□ → □, L
Check for 0
0 → □, R
Go to end
0 → 0, R
1 → 1, R

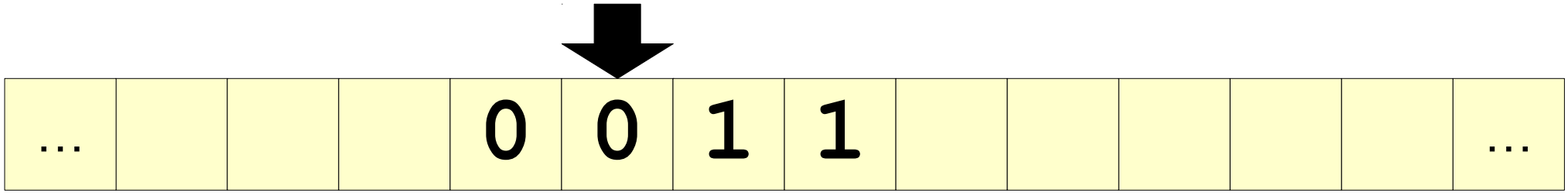
...
0
0
1
1
...

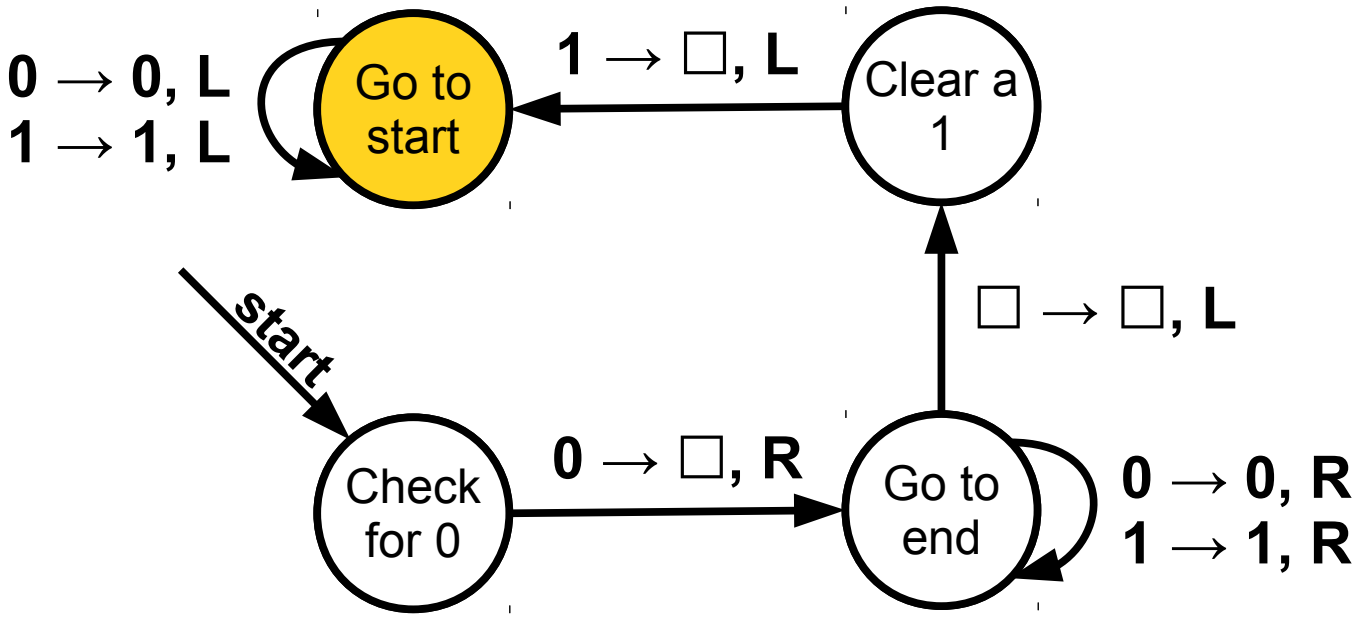
0 → 0, L
1 → 1, L
Go to start
1 → □, L
Clear a 1
start
□ → □, L
Check for 0
0 → □, R
Go to end
0 → 0, R
1 → 1, R

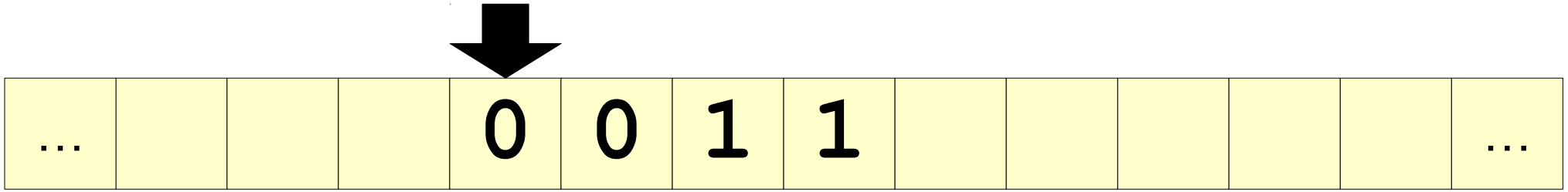
...
0 0 1 1
...

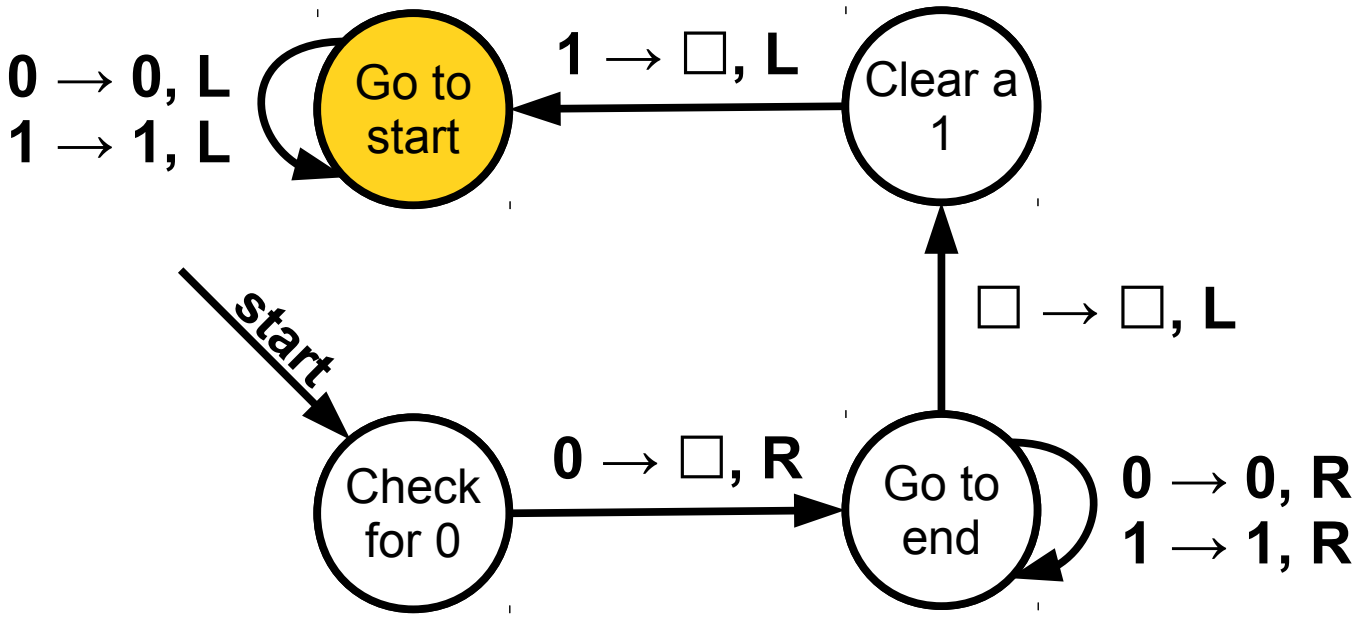
0 → 0, L
1 → 1, L
Go to start
1 → □, L
Clear a 1
start
□ → □, L
Check for 0
0 → □, R
Go to end
0 → 0, R
1 → 1, R

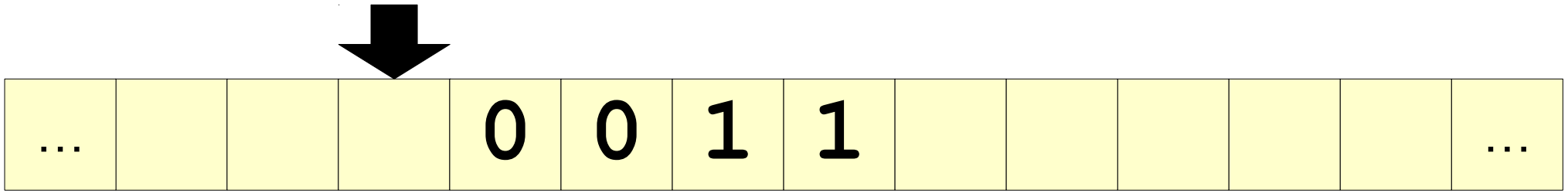
...
0 0 1 1
...

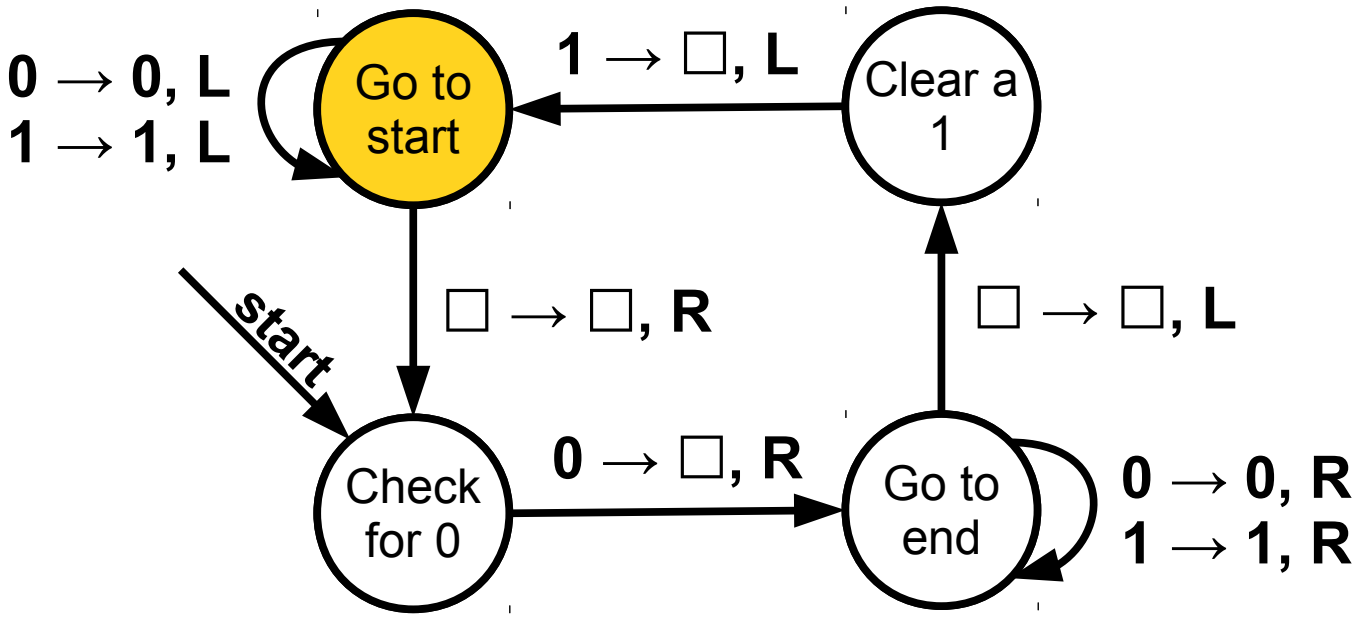
0 → 0, L
1 → 1, L
Go to start
1 → □, L
Clear a 1
start
□ → □, R
□ → □, L
Check for 0
0 → □, R
Go to end
0 → 0, R
1 → 1, R

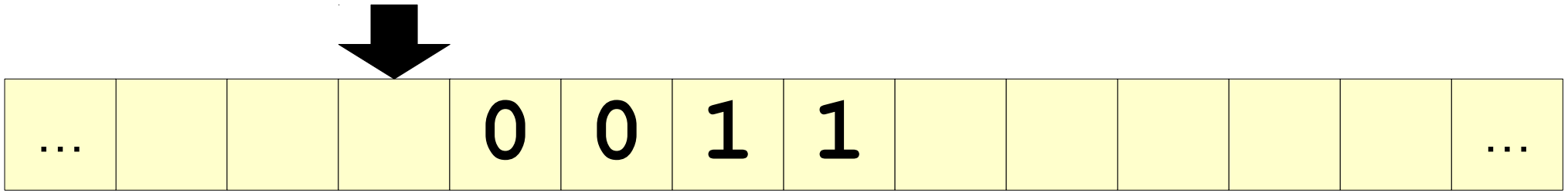
...
0 0 1 1
...

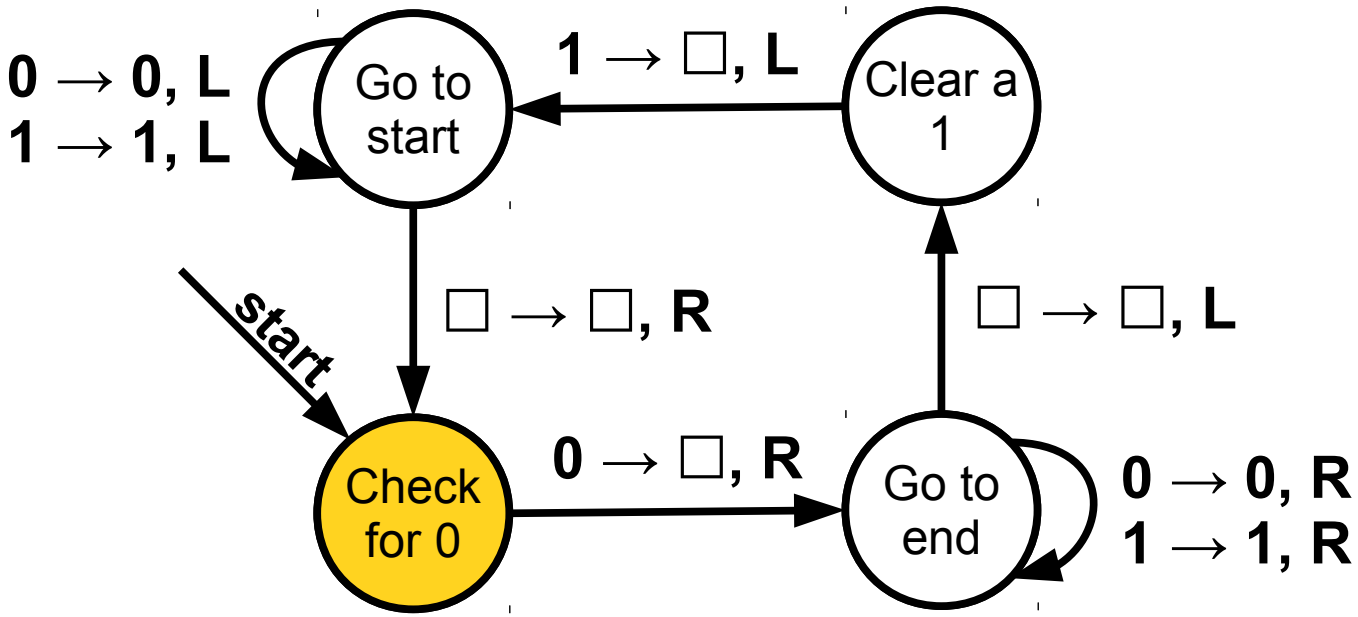
0 → 0, L
1 → 1, L
Go to start
1 → □, L
Clear a 1
start
□ → □, R
□ → □, L
Check for 0
0 → □, R
Go to end
0 → 0, R
1 → 1, R

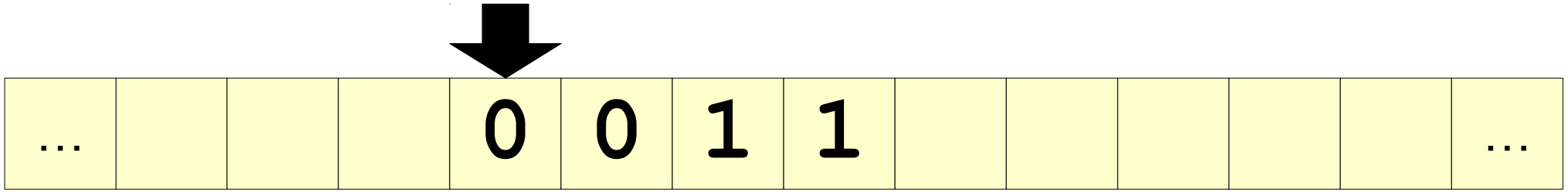
...
0
0
1
1
...

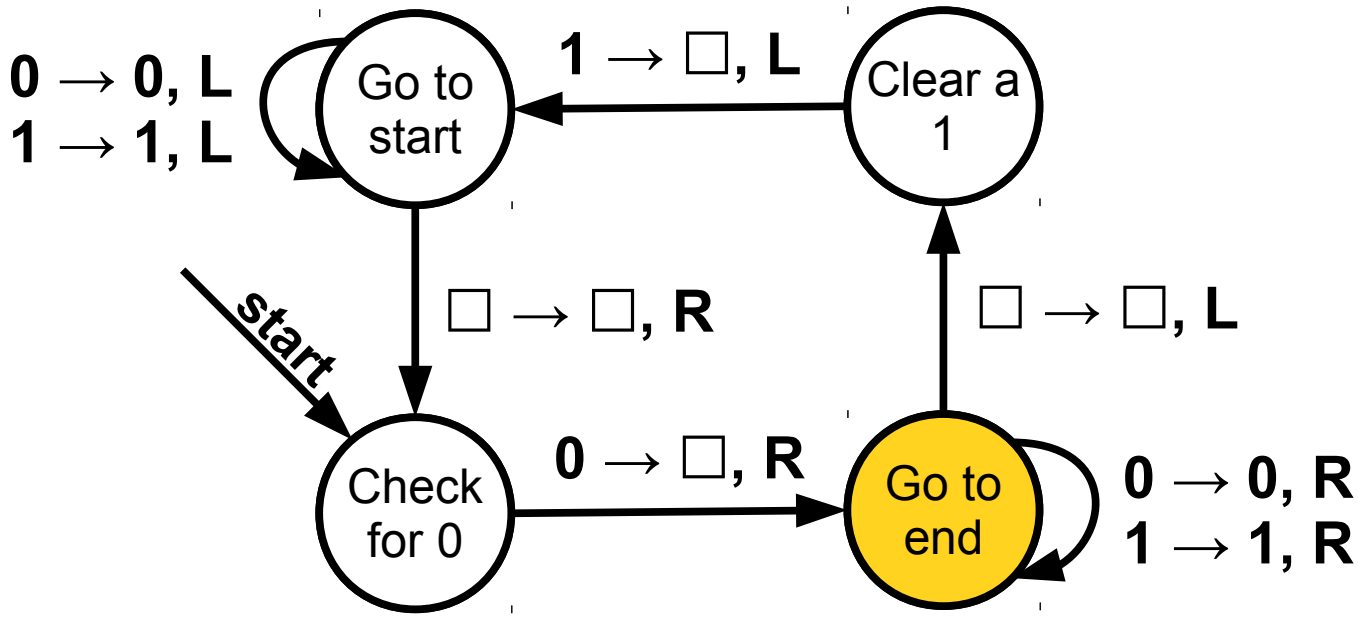
0 → 0, L
1 → 1, L
Go to start
1 → □, L
Clear a 1
start
□ → □, R
□ → □, L
Check for 0
0 → □, R
Go to end
0 → 0, R
1 → 1, R

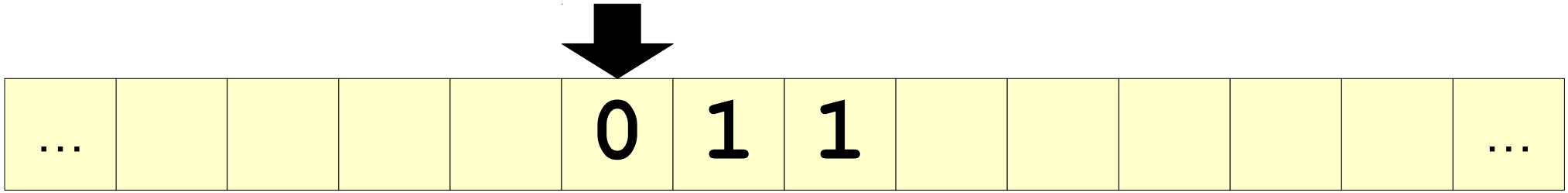
...
0
1
1
...

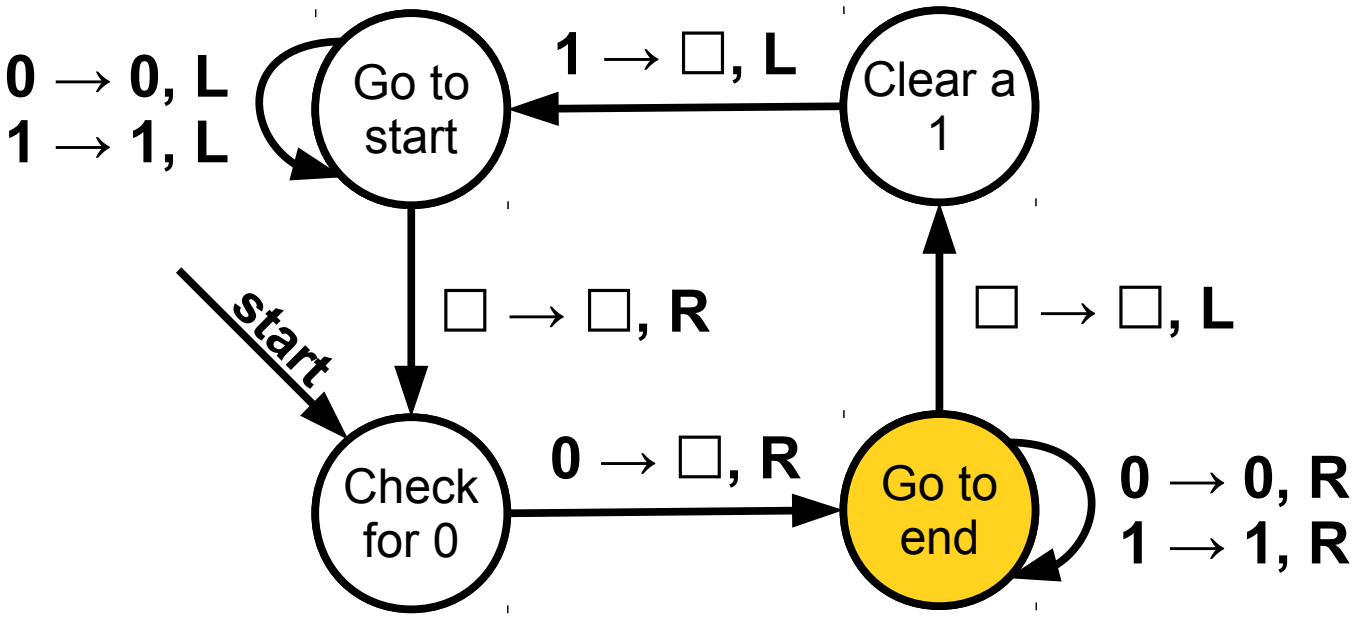
0 → 0, L
1 → 1, L
Go to start
1 → □, L
Clear a 1
start
□ → □, R
□ → □, L
Check for 0
0 → □, R
Go to end
0 → 0, R
1 → 1, R

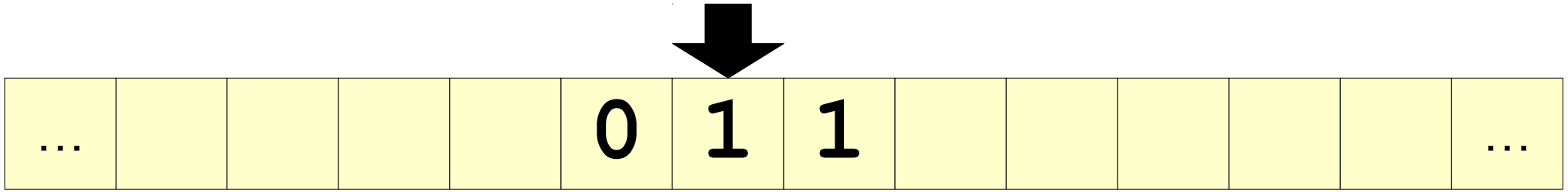
...
0
1
1
...

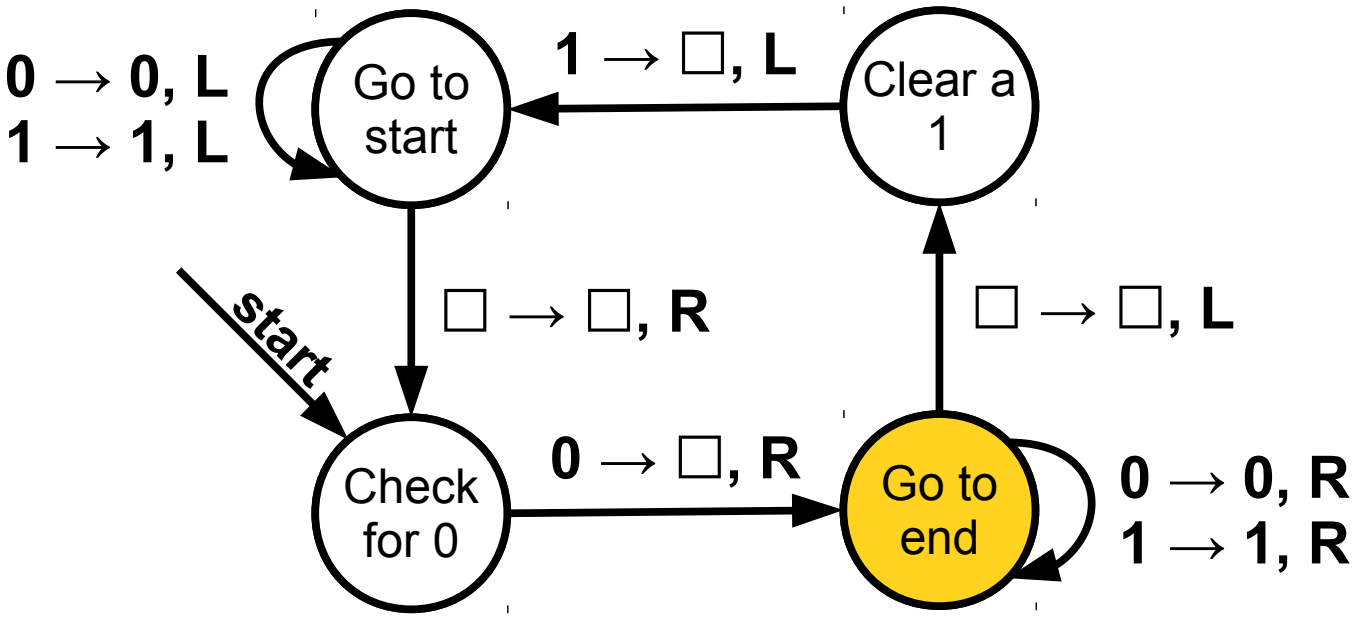
0 → 0, L
1 → 1, L
Go to start
1 → □, L
Clear a 1
start
□ → □, R
□ → □, L
Check for 0
0 → □, R
Go to end
0 → 0, R
1 → 1, R

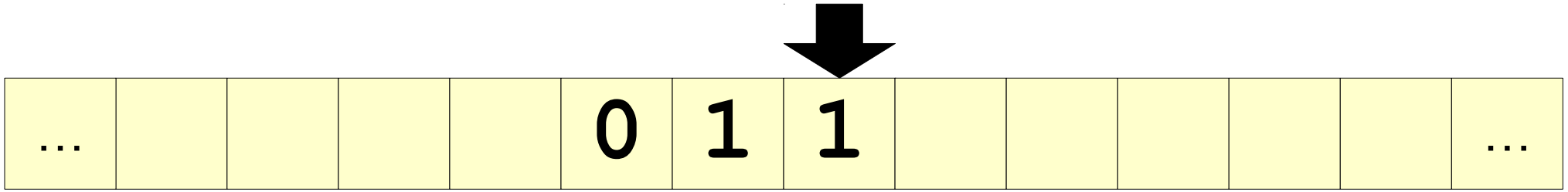
...
0
1
1
...

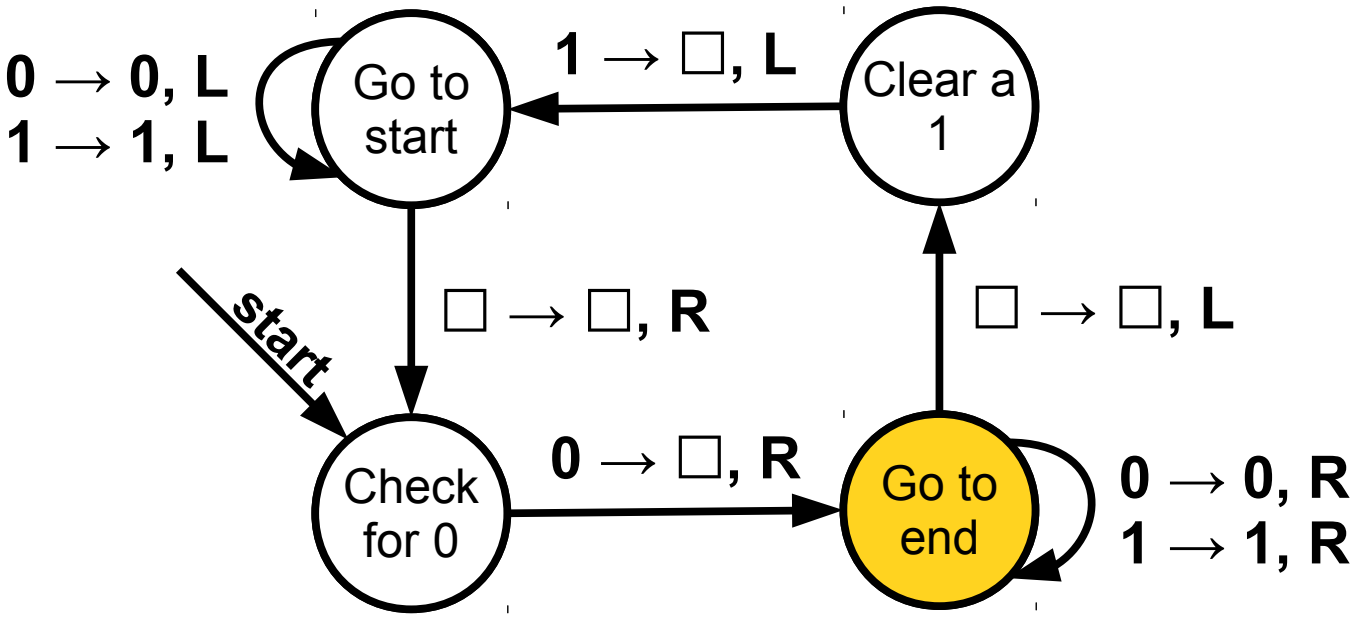
0 → 0, L
1 → 1, L
Go to start
1 → □, L
Clear a 1
start
□ → □, R
□ → □, L
Check for 0
0 → □, R
Go to end
0 → 0, R
1 → 1, R

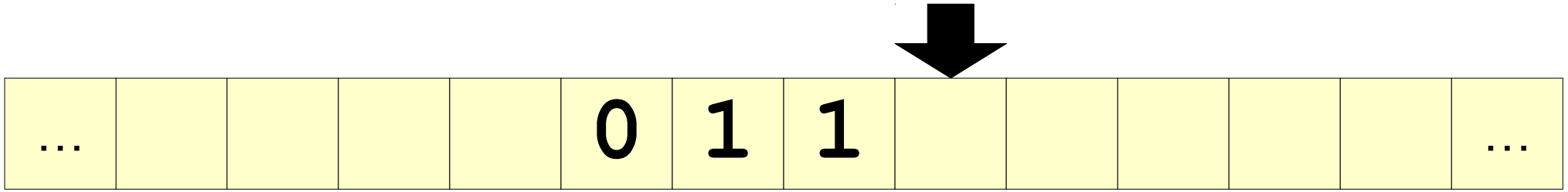
...
0
1
1
...

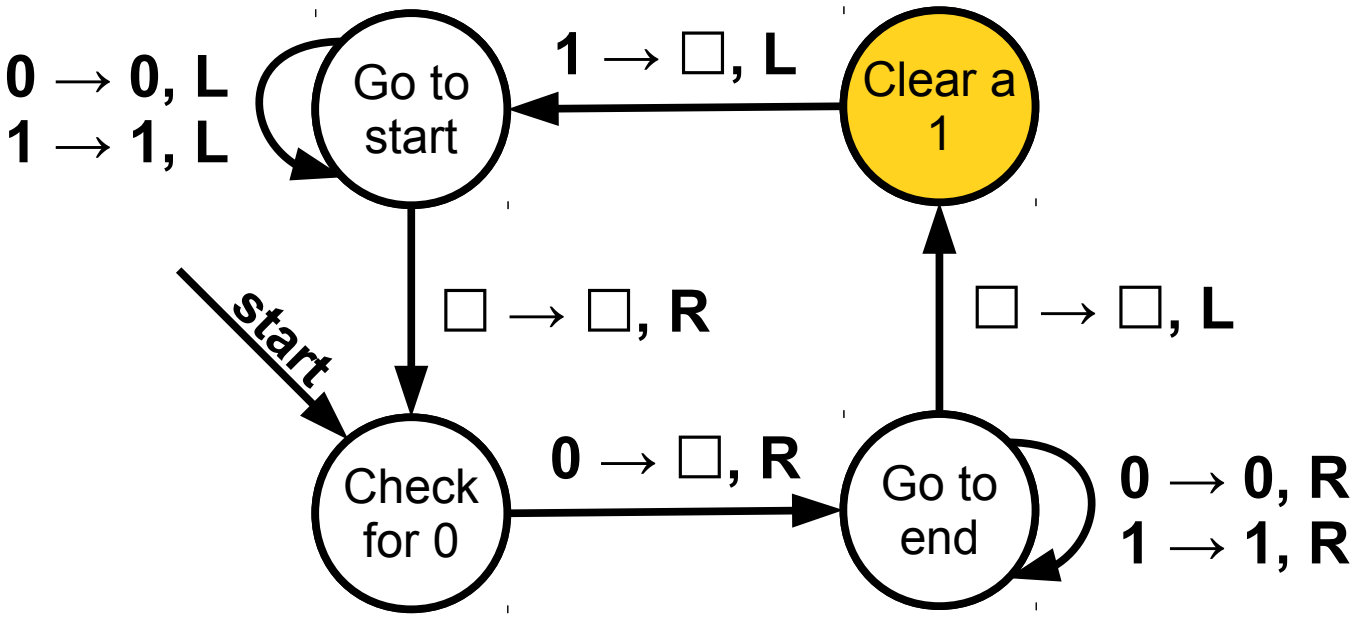
0 → 0, L
1 → 1, L
Go to start
1 → □, L
Clear a 1
start
□ → □, R
□ → □, L
Check for 0
0 → □, R
Go to end
0 → 0, R
1 → 1, R

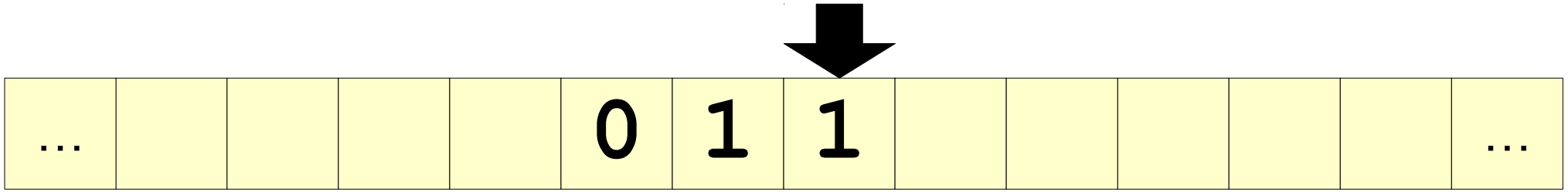
...
0
1
1
...

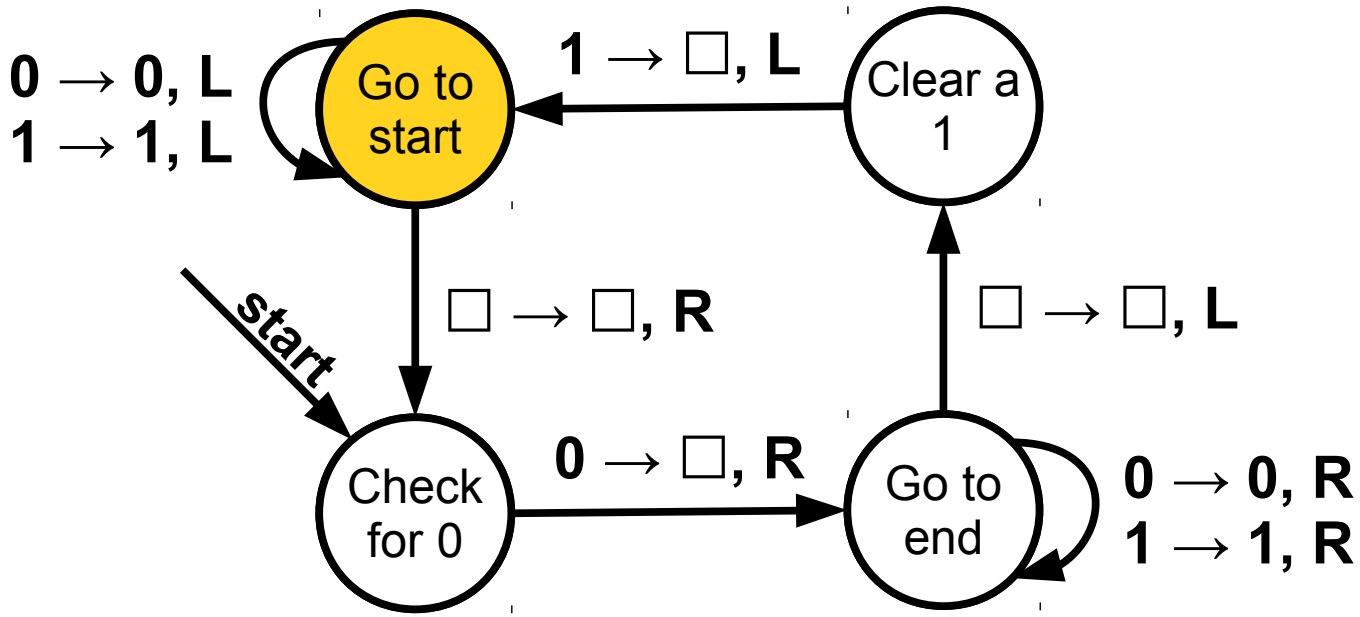
0 → 0, L
1 → 1, L
Go to start
1 → □, L
Clear a 1
start
□ → □, R
□ → □, L
Check for 0
0 → □, R
Go to end
0 → 0, R
1 → 1, R

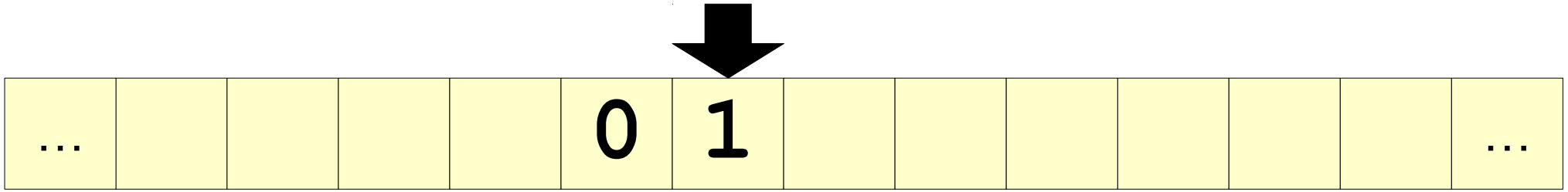
...
0
1
...

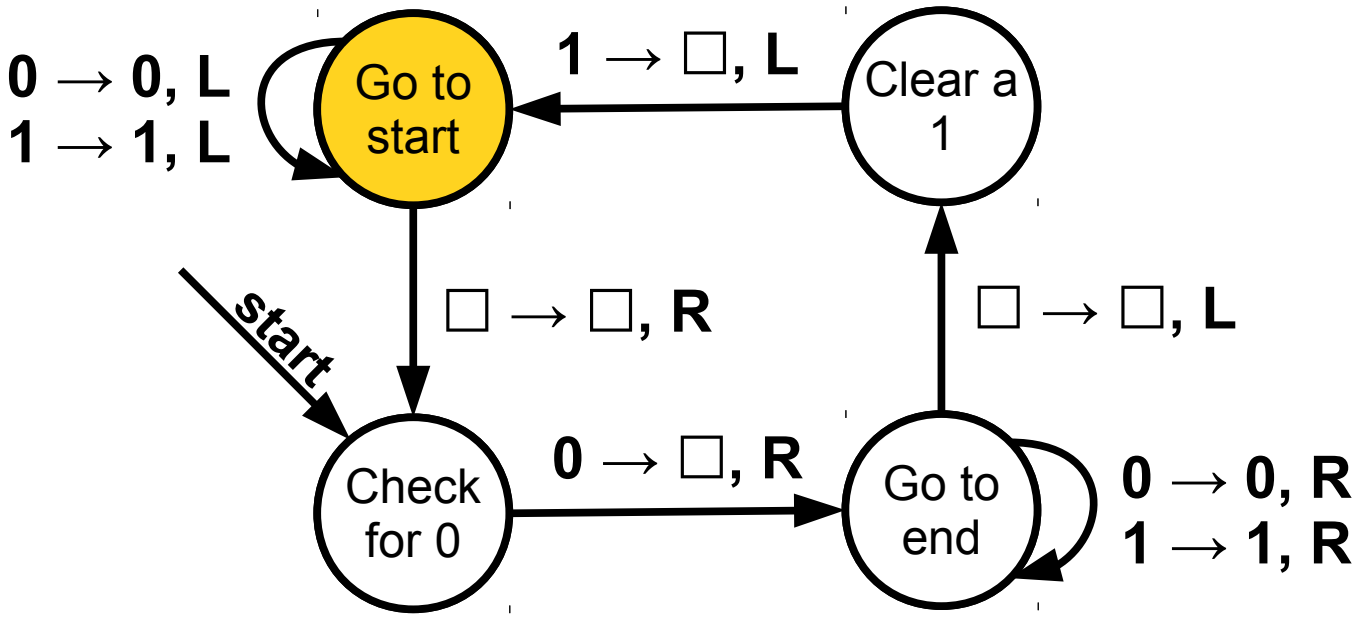
0 → 0, L
1 → 1, L
Go to start
1 → □, L
Clear a 1
start
□ → □, R
□ → □, L
Check for 0
0 → □, R
Go to end
0 → 0, R
1 → 1, R

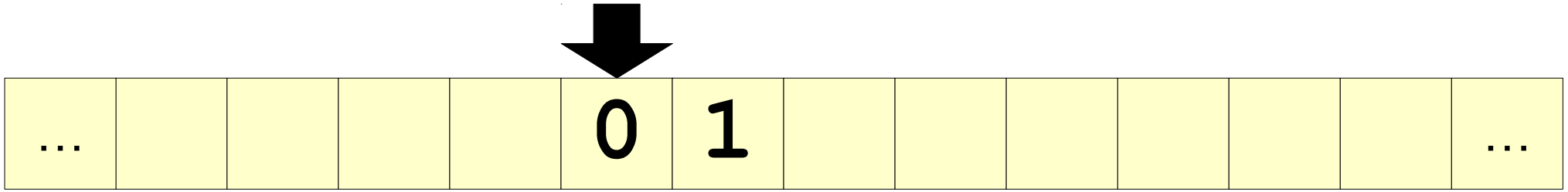
...
0
1
...

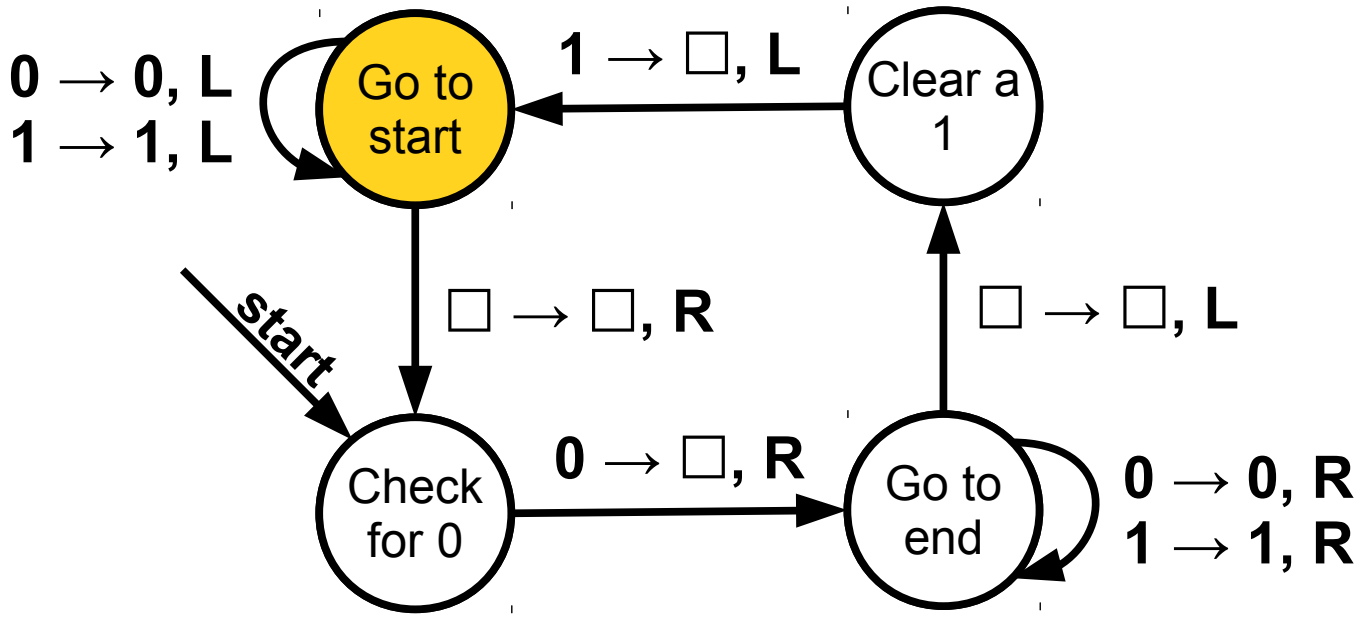
0 → 0, L
1 → 1, L
Go to start
1 → □, L
Clear a 1
start
□ → □, R
□ → □, L
Check for 0
0 → □, R
Go to end
0 → 0, R
1 → 1, R

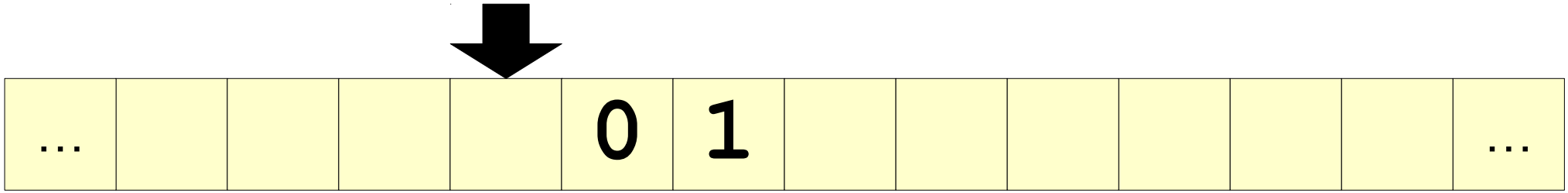
...
0
1
...

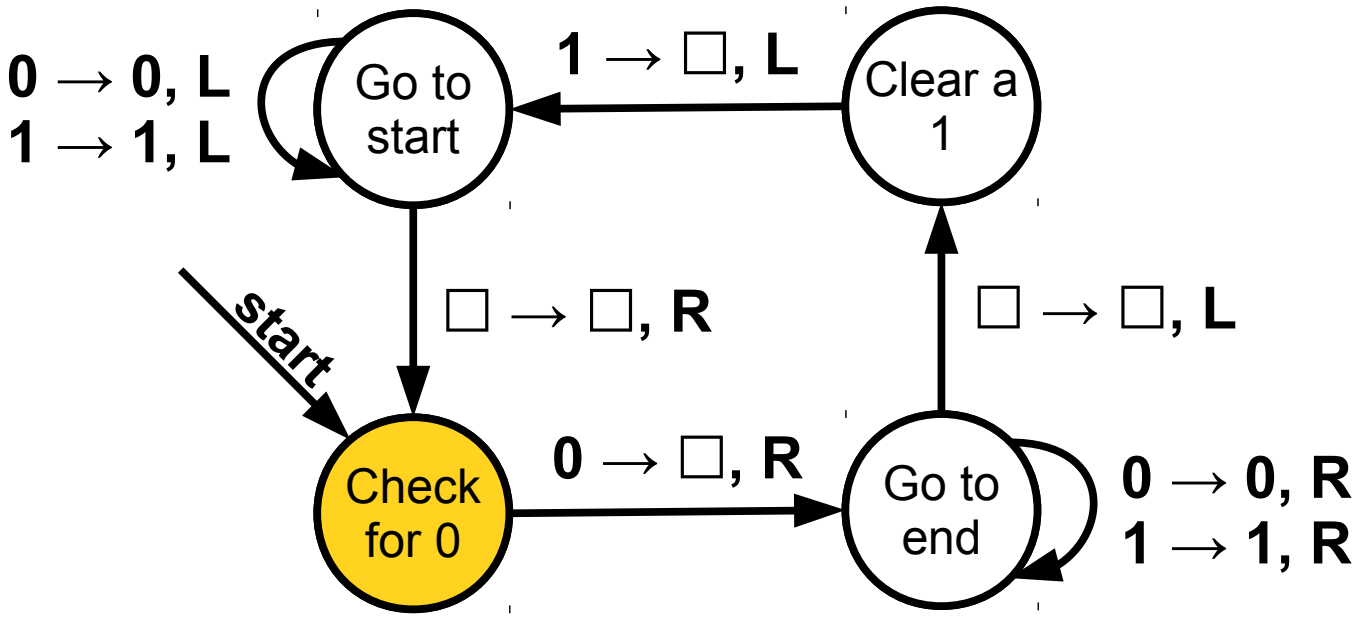
0 → 0, L
1 → 1, L
Go to start
1 → □, L
Clear a 1
start
□ → □, R
□ → □, L
Check for 0
0 → □, R
Go to end
0 → 0, R
1 → 1, R

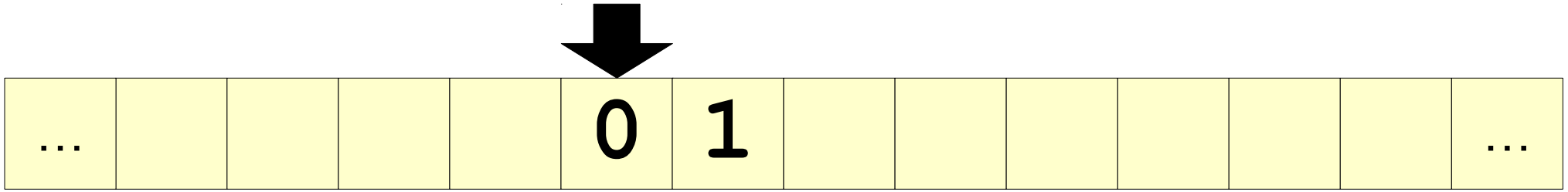
...
0
1
...

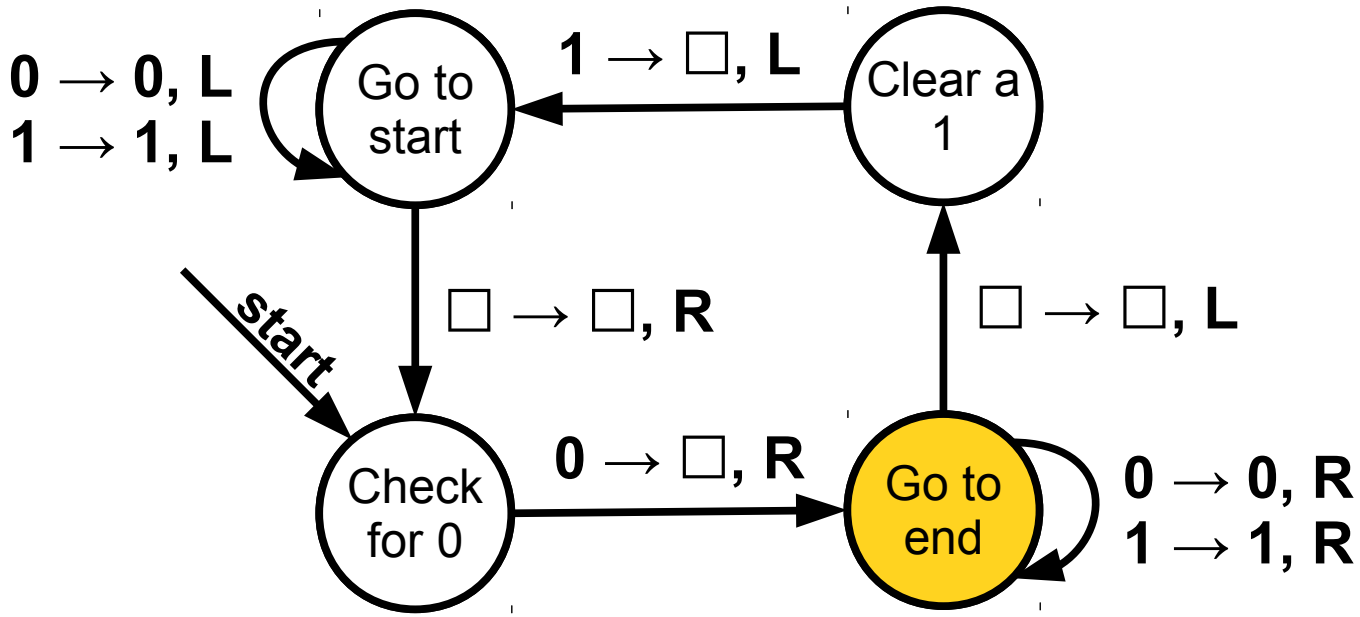
0 → 0, L
1 → 1, L
Go to start
1 → □, L
Clear a 1
start
□ → □, R
□ → □, L
Check for 0
0 → □, R
Go to end
0 → 0, R
1 → 1, R

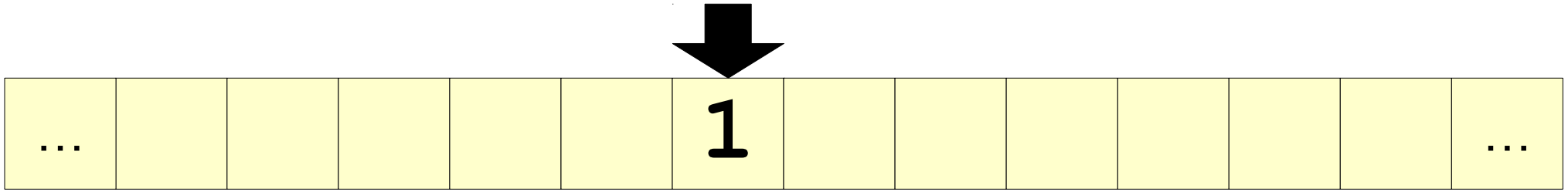
...
1
...

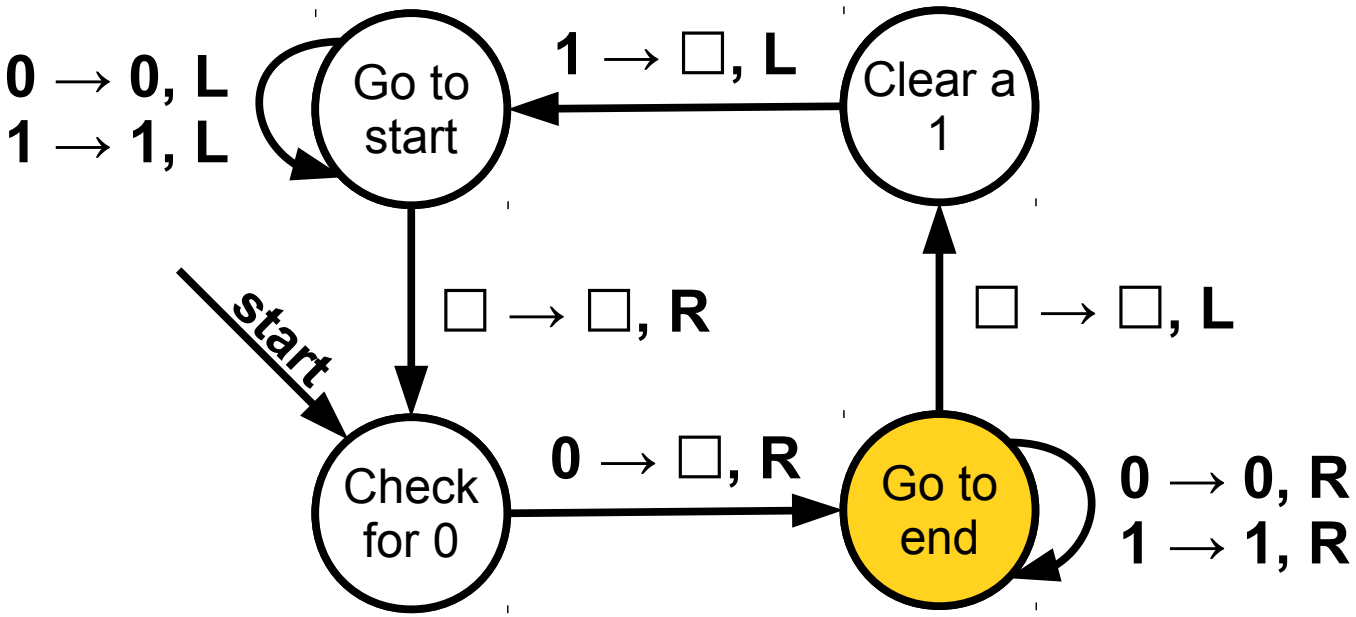
0 → 0, L
1 → 1, L
Go to start
1 → □, L
Clear a 1
start
□ → □, R
□ → □, L
Check for 0
0 → □, R
Go to end
0 → 0, R
1 → 1, R

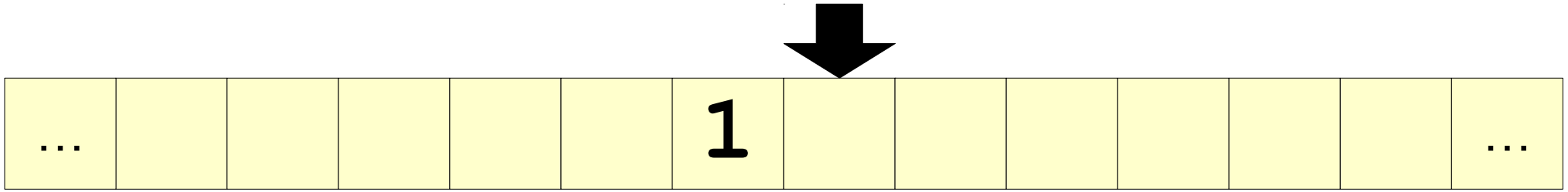
...
1
...

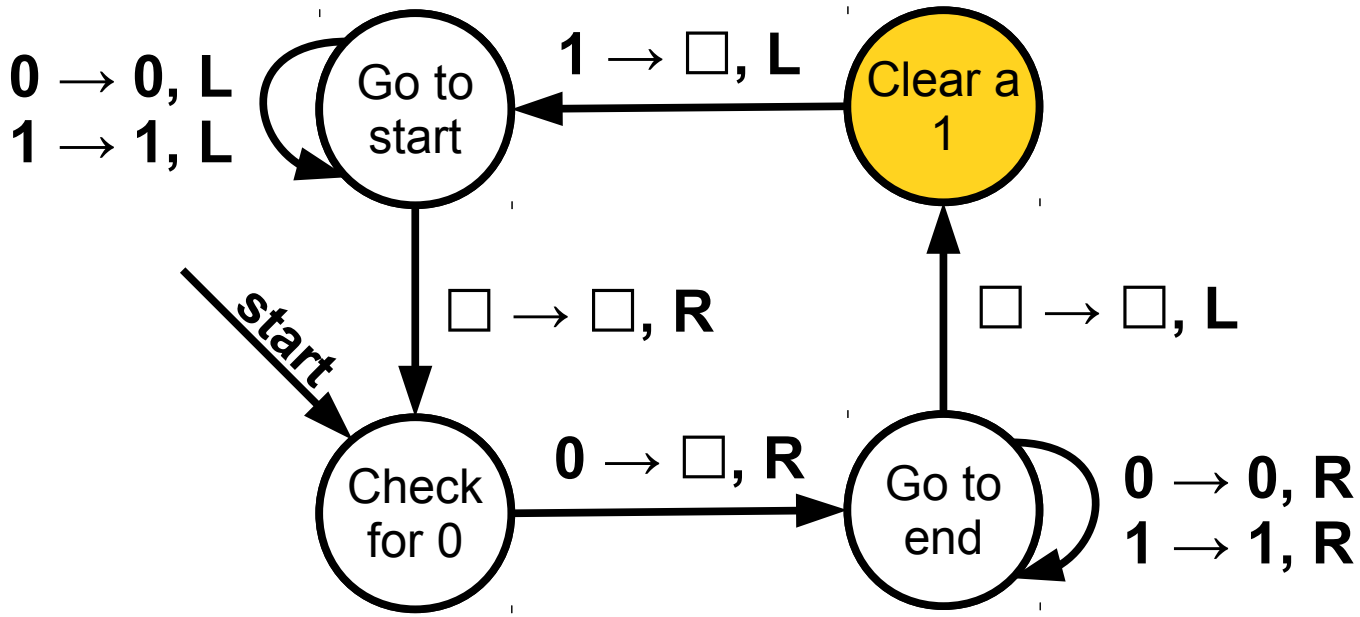
0 → 0, L
1 → 1, L
Go to start
1 → □, L
Clear a 1
start
□ → □, R
□ → □, L
Check for 0
0 → □, R
Go to end
0 → 0, R
1 → 1, R

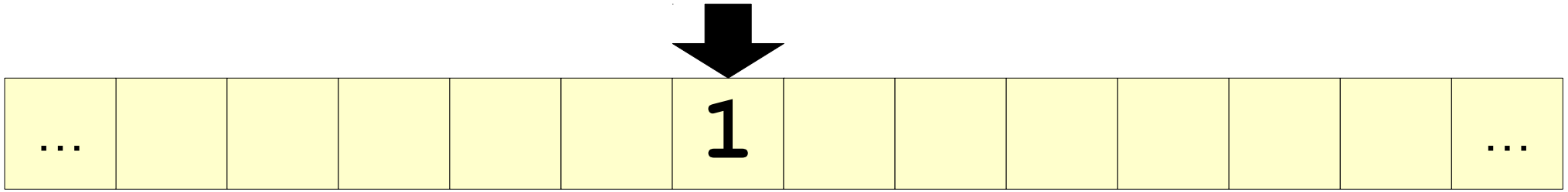
...
1
...

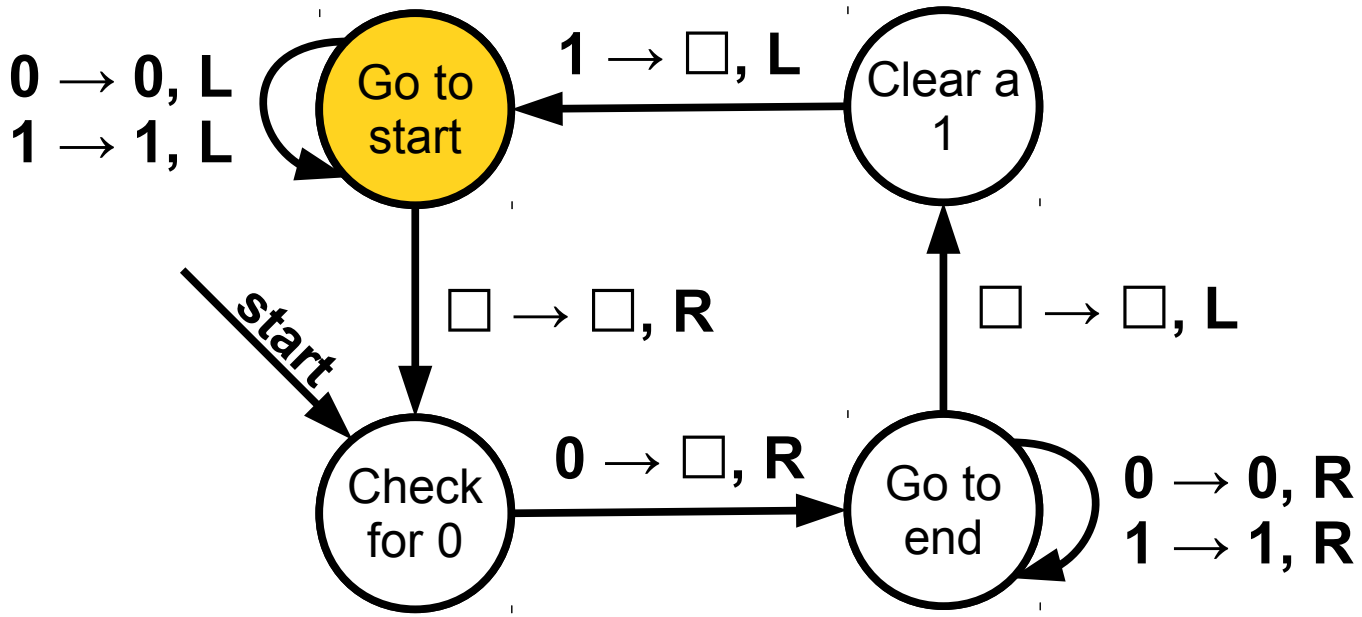
0 → 0, L
1 → 1, L
Go to start
1 → □, L
Clear a 1
start
□ → □, R
□ → □, L
Check for 0
0 → □, R
Go to end
0 → 0, R
1 → 1, R

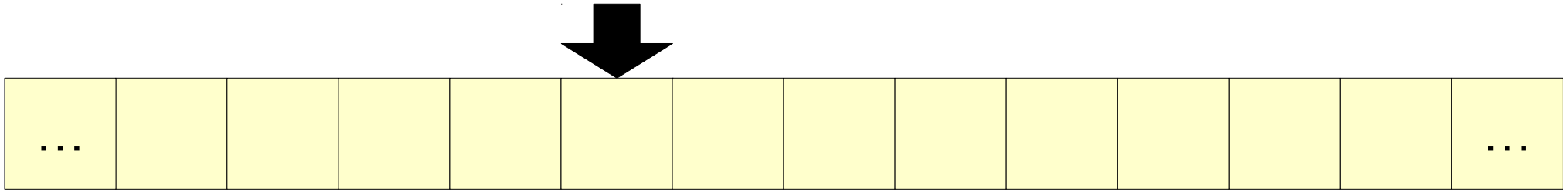
…
…

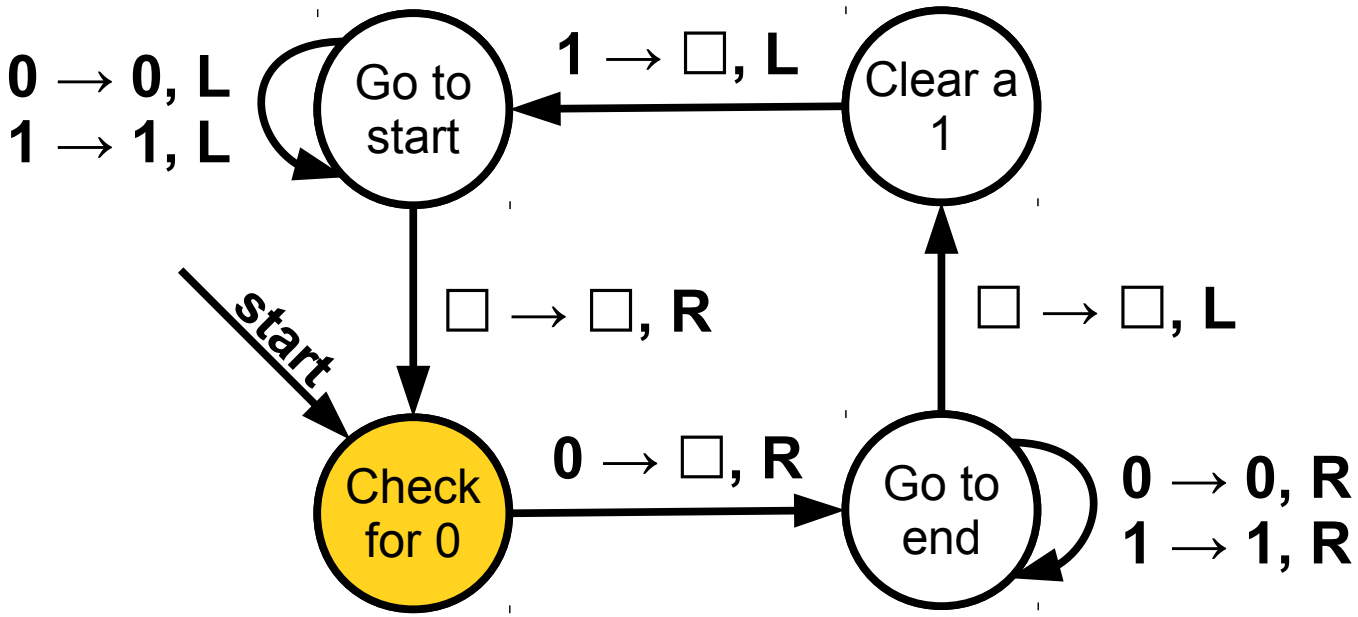
0 → 0, L
1 → 1, L
Go to start
1 → □, L
Clear a 1
start
□ → □, R
□ → □, L
Check for 0
0 → □, R
Go to end
0 → 0, R
1 → 1, R

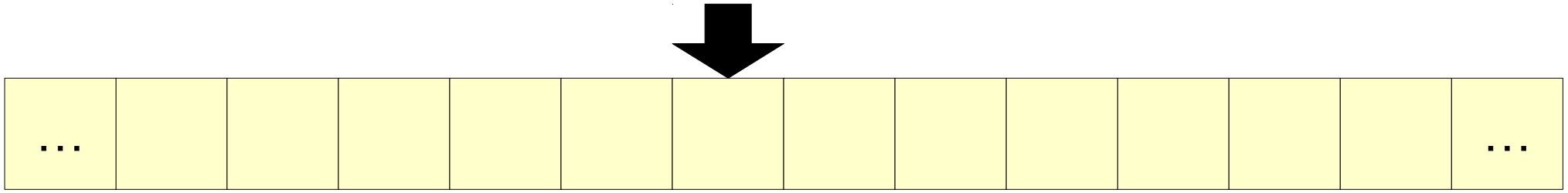
…
…

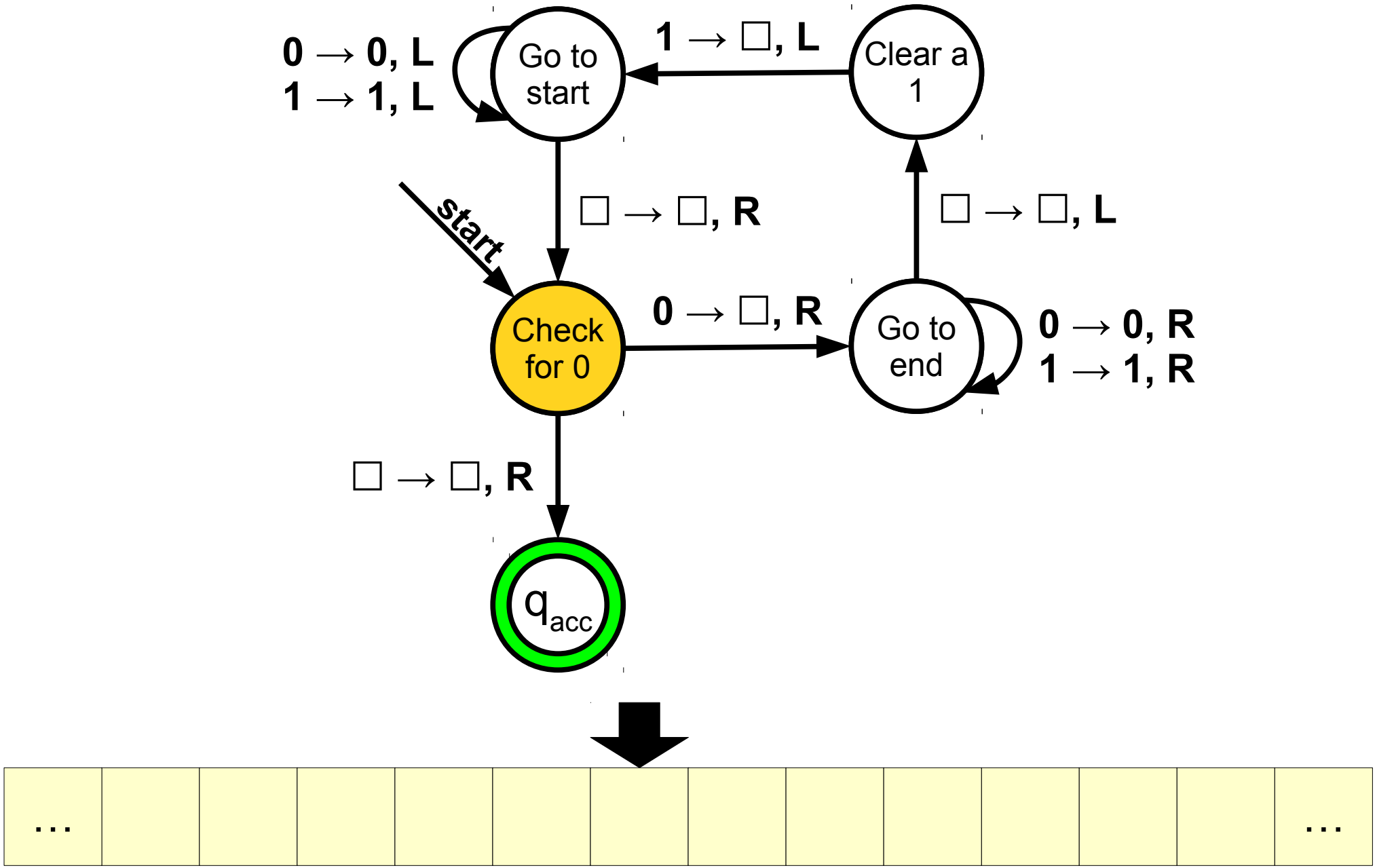
0 → 0, L
1 → 1, L
Go to start
1 → □, L
Clear a 1
start
□ → □, R
□ → □, L
Check for 0
0 → □, R
Go to end
0 → 0, R
1 → 1, R
□ → □, R
q_acc
...
...

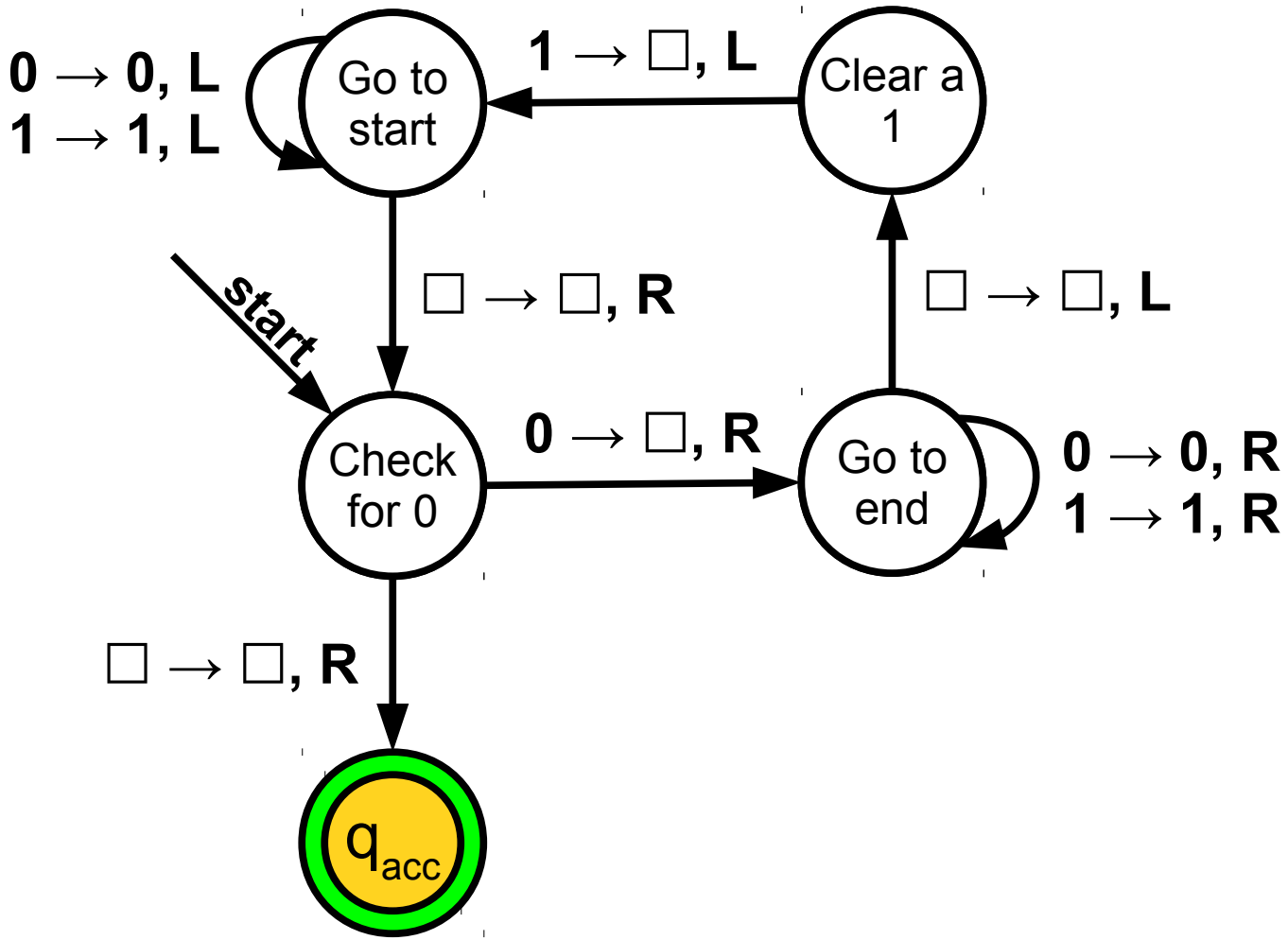
0 → 0, L
1 → 1, L
Go to start
1 → □, L
Clear a 1
start
□ → □, R
□ → □, L
Check for 0
0 → □, R
Go to end
0 → 0, R
1 → 1, R
□ → □, R
q_acc

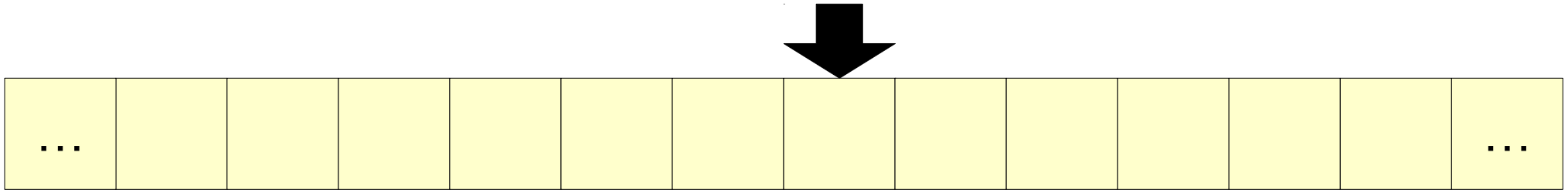
…
…

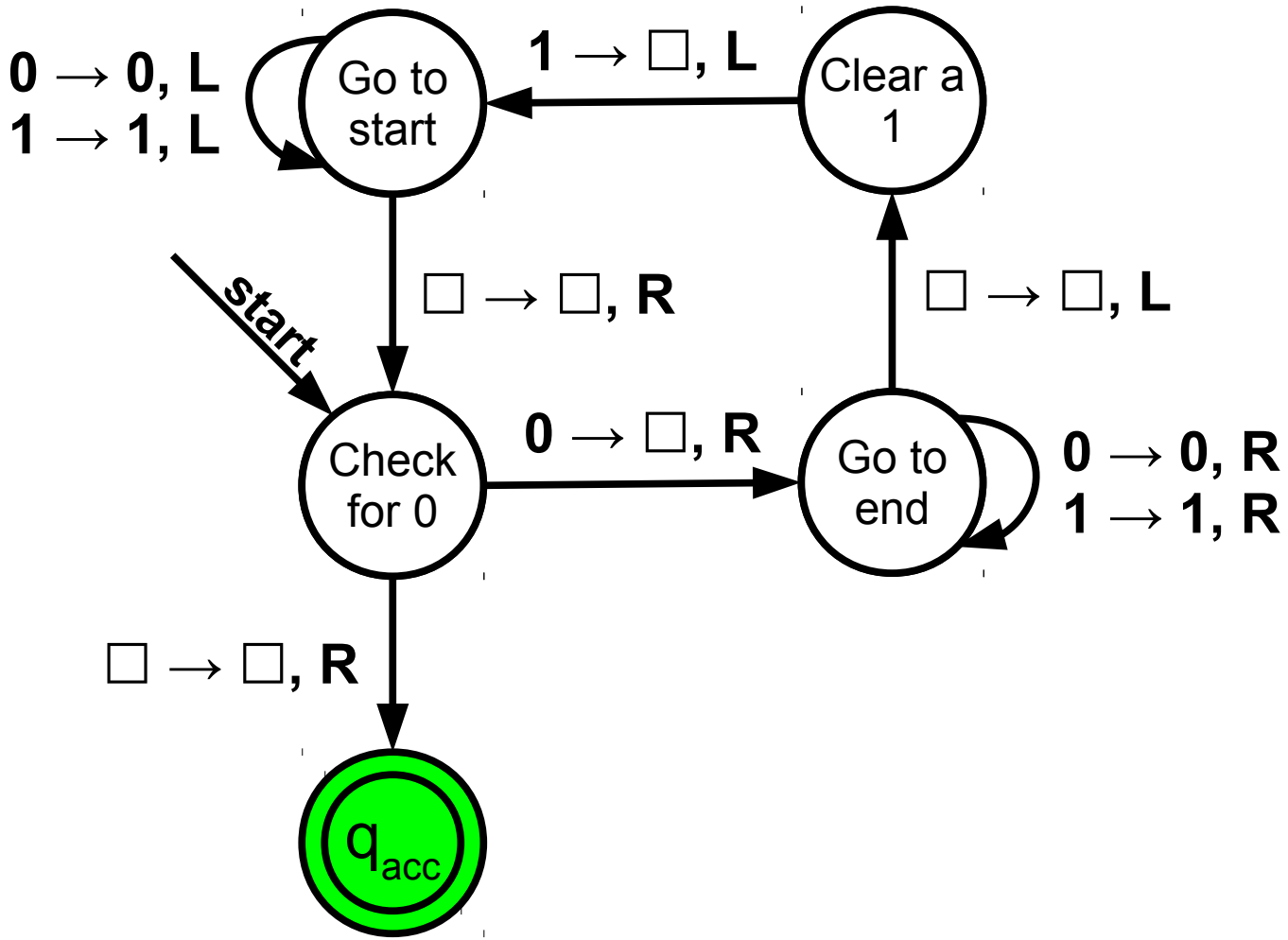
0 → 0, L
1 → 1, L
Go to start
1 → □, L
Clear a 1
start
□ → □, R
□ → □, L
Check for 0
0 → □, R
Go to end
0 → 0, R
1 → 1, R
□ → □, R
q_acc

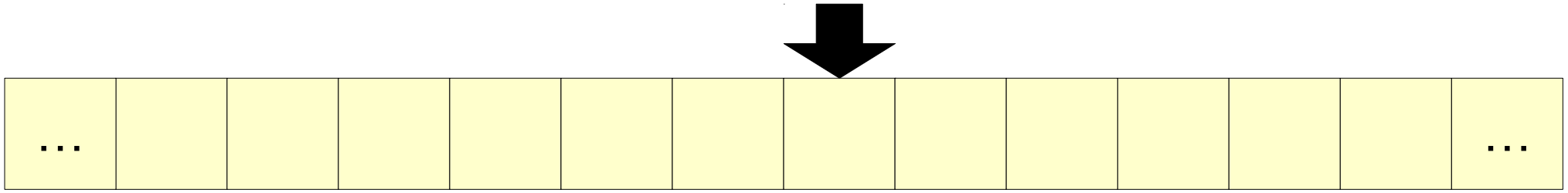
…
…

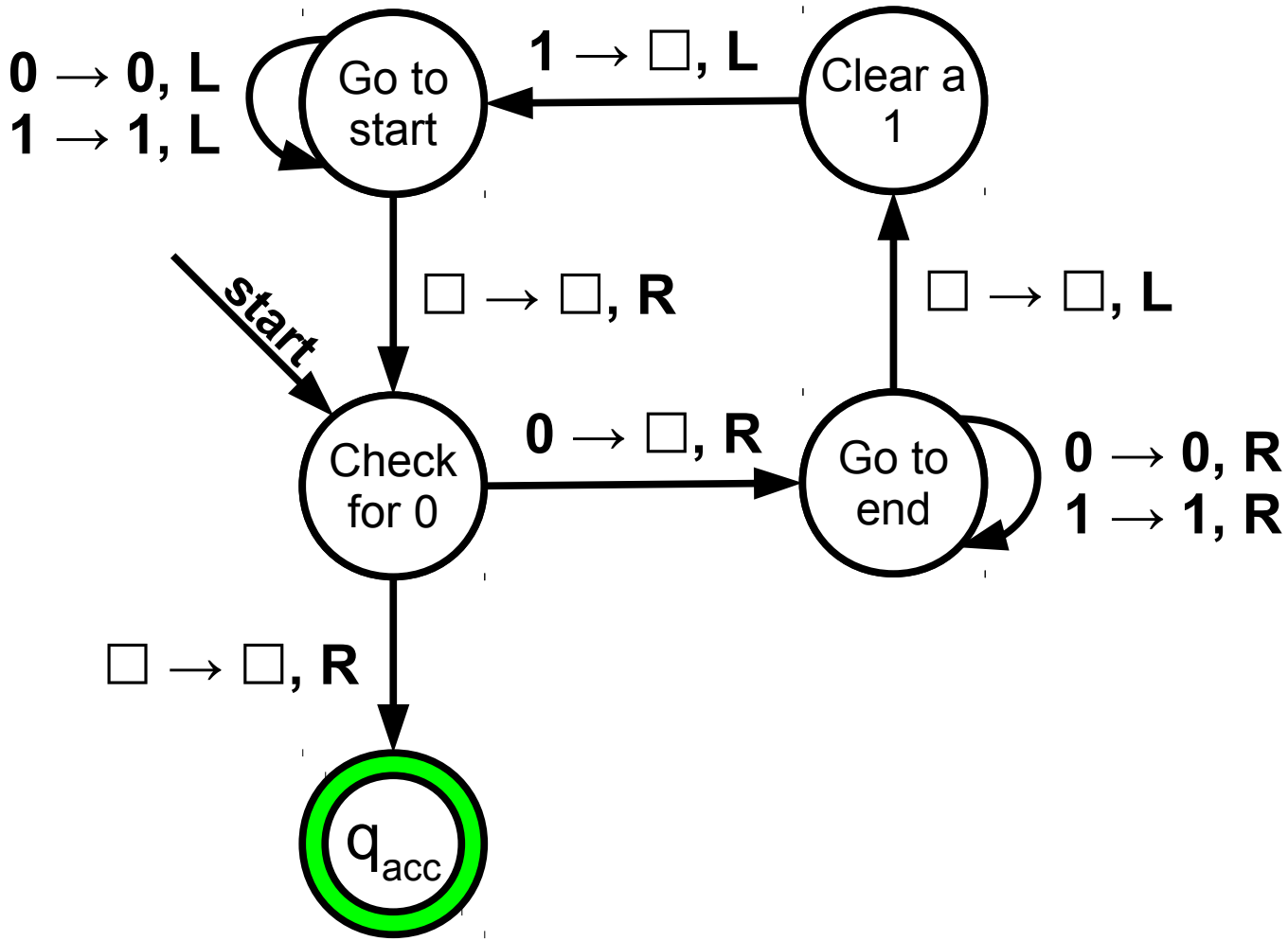
0 → 0, L
1 → 1, L
Go to start
1 → □, L
Clear a 1
start
□ → □, R
□ → □, L
Check for 0
0 → □, R
Go to end
0 → 0, R
1 → 1, R
□ → □, R
q_acc

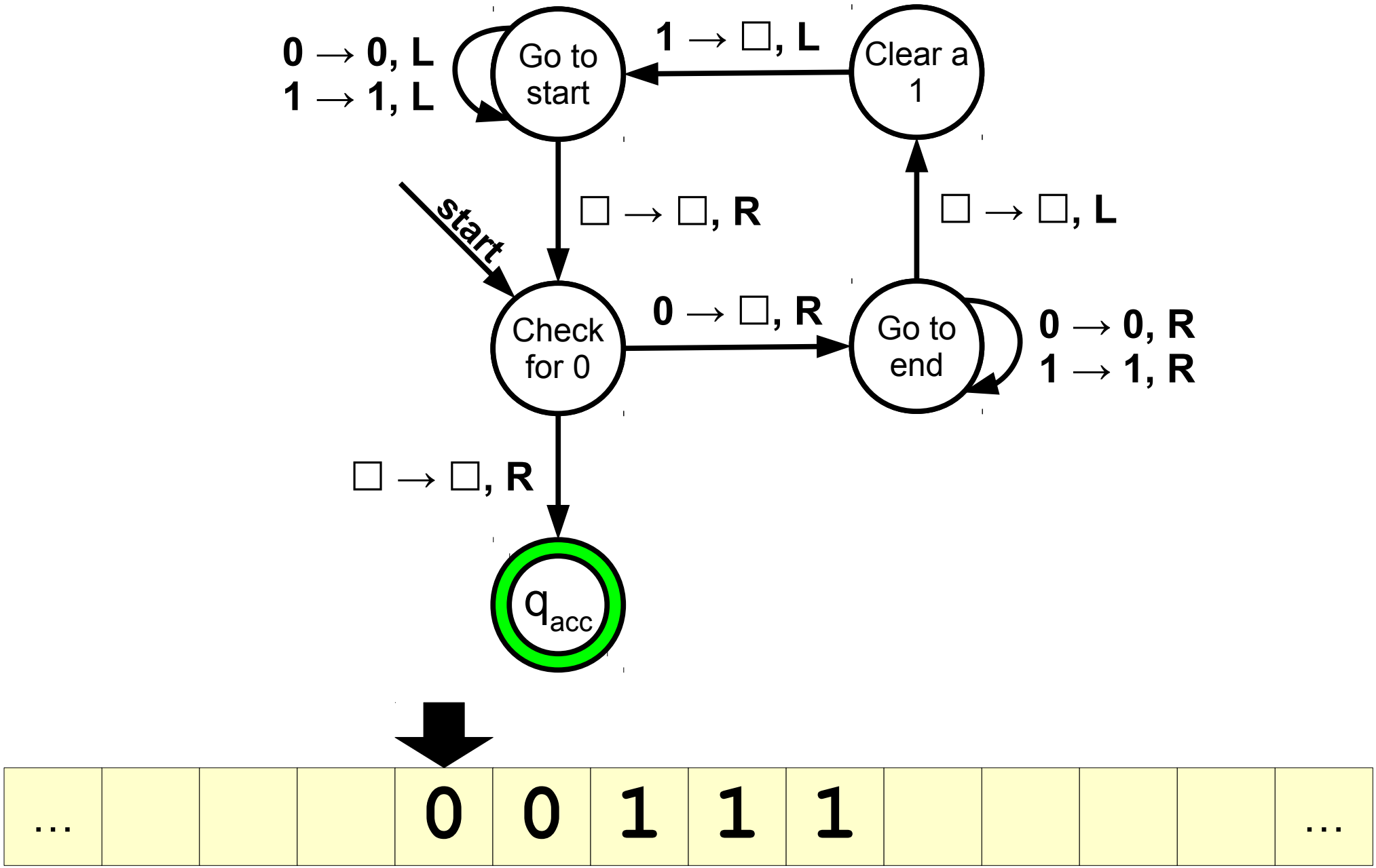
0 → 0, L
1 → 1, L
Go to start
1 → □, L
Clear a 1
start
□ → □, R
□ → □, L
Check for 0
0 → □, R
Go to end
0 → 0, R
1 → 1, R
□ → □, R
q_acc
...
0
0
1
1
1
...

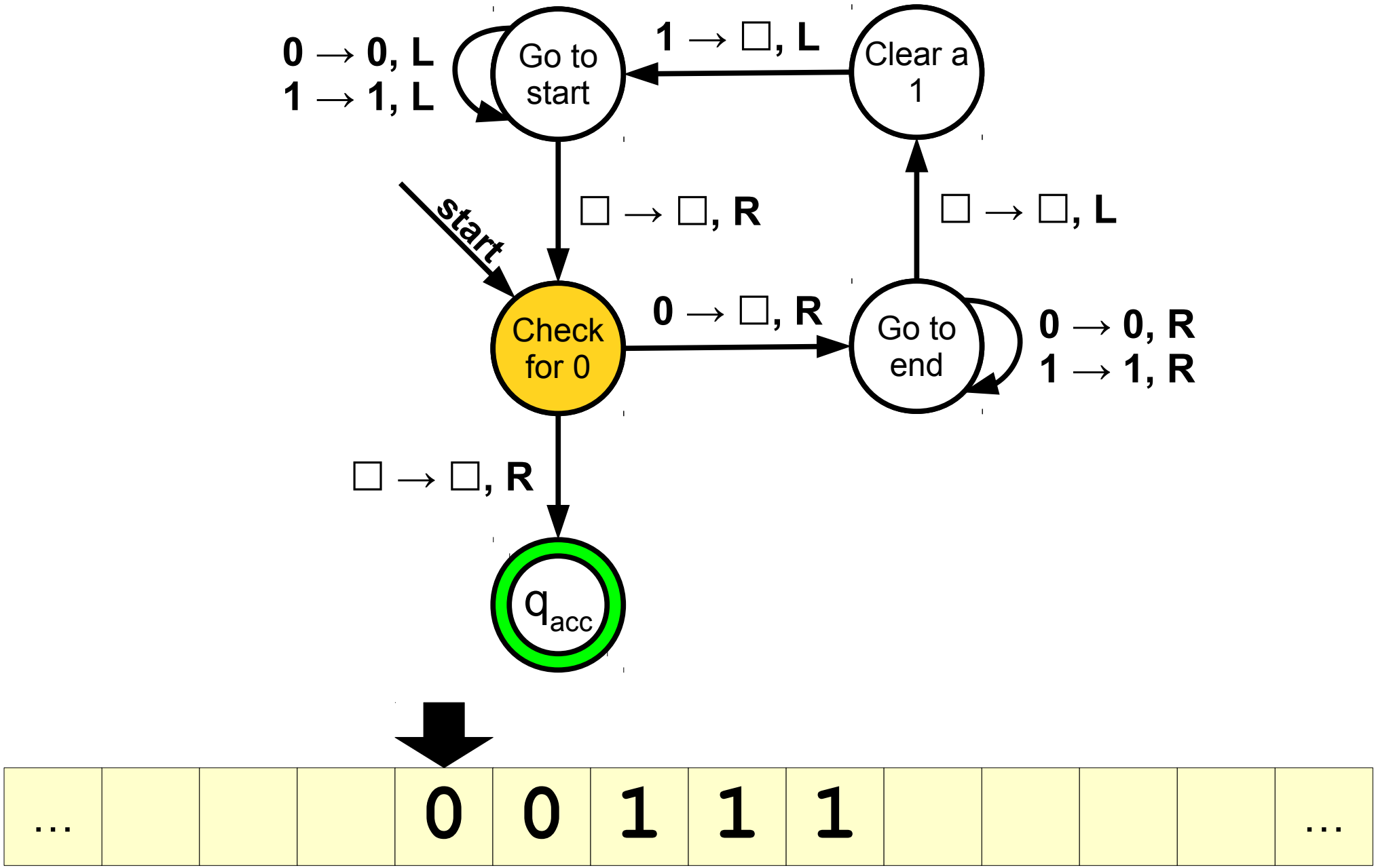
0 → 0, L
1 → 1, L
Go to start
1 → □, L
Clear a 1
start
□ → □, R
□ → □, L
Check for 0
0 → □, R
Go to end
0 → 0, R
1 → 1, R
□ → □, R
q_acc
...
0
0
1
1
1
...

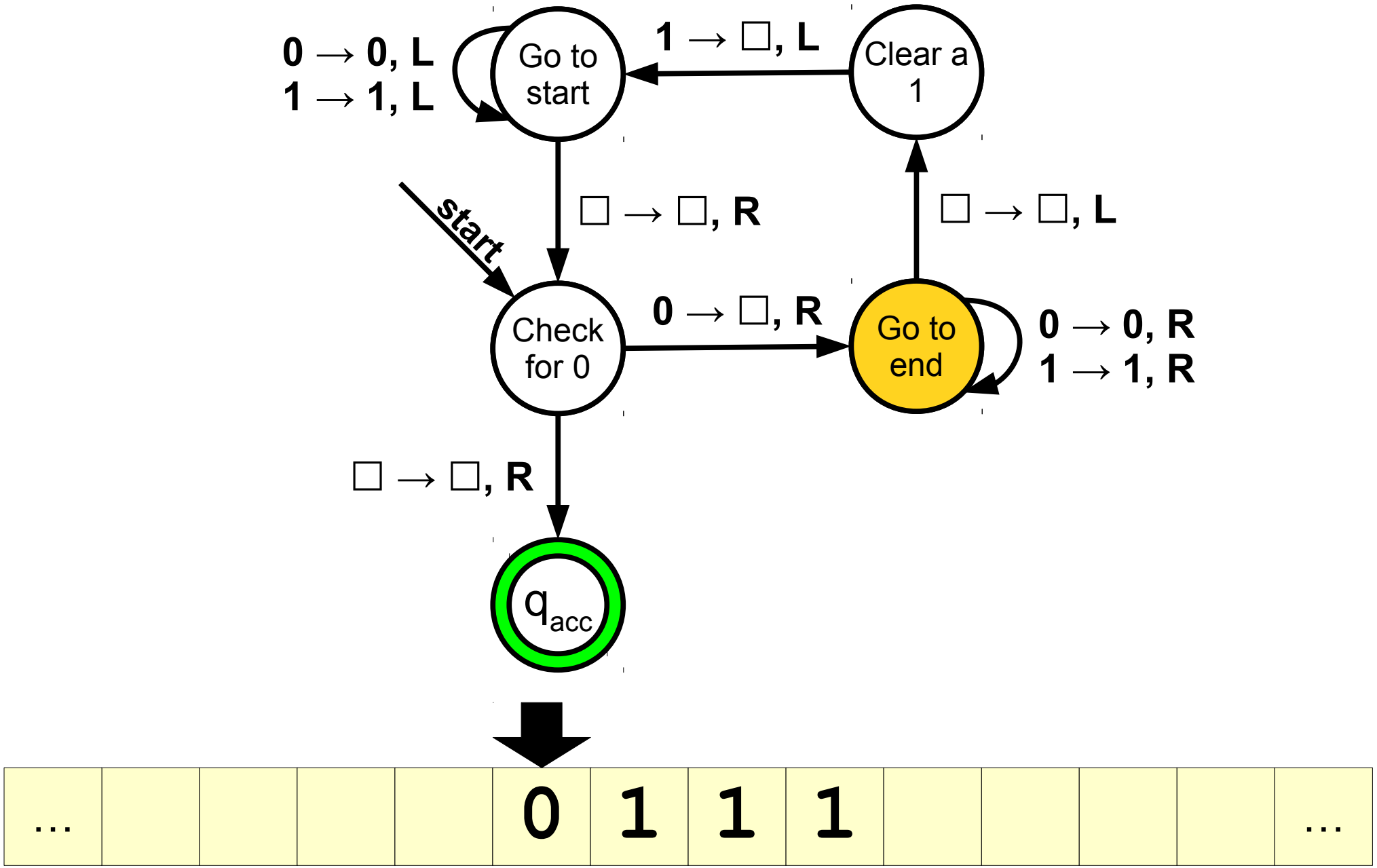
0 → 0, L
1 → 1, L
Go to start
1 → □, L
Clear a 1
start
□ → □, R
□ → □, L
Check for 0
0 → □, R
Go to end
0 → 0, R
1 → 1, R
□ → □, R
q_acc
...
0
1
1
1
...

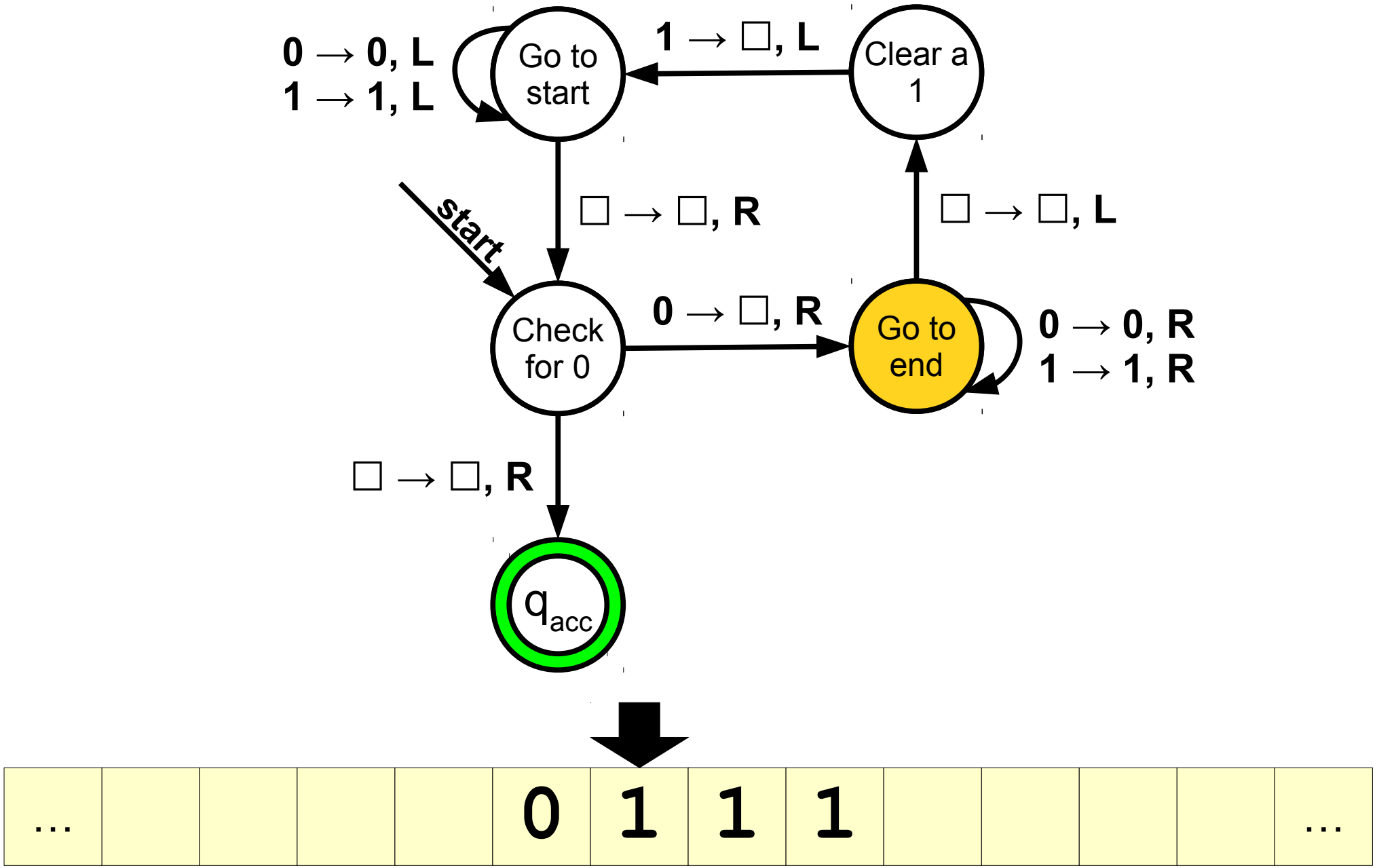
0 → 0, L
1 → 1, L
Go to start
1 → □, L
Clear a 1
start
□ → □, R
□ → □, L
Check for 0
0 → □, R
Go to end
0 → 0, R
1 → 1, R
□ → □, R
q_acc
...
0
1
1
1
...

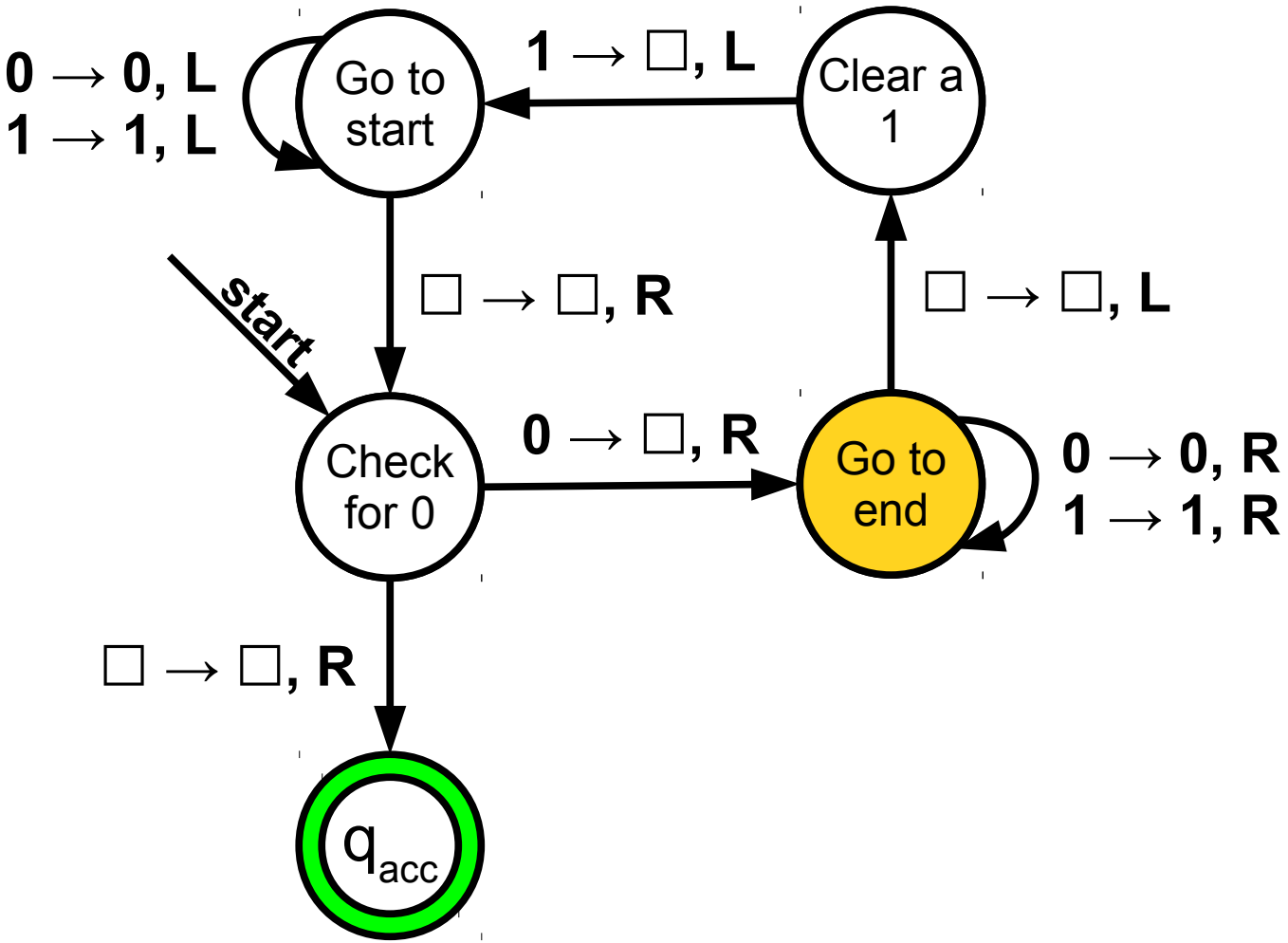
0 → 0, L
1 → 1, L
Go to start
1 → □, L
Clear a 1
start
□ → □, R
□ → □, L
Check for 0
0 → □, R
Go to end
0 → 0, R
1 → 1, R
□ → □, R
q_acc

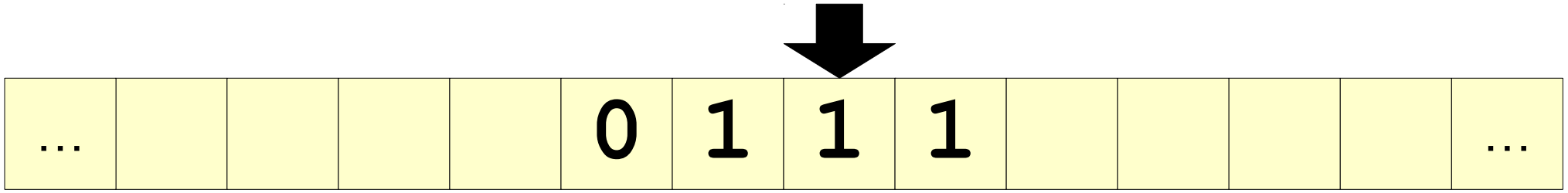
...
0
1
1
1
...

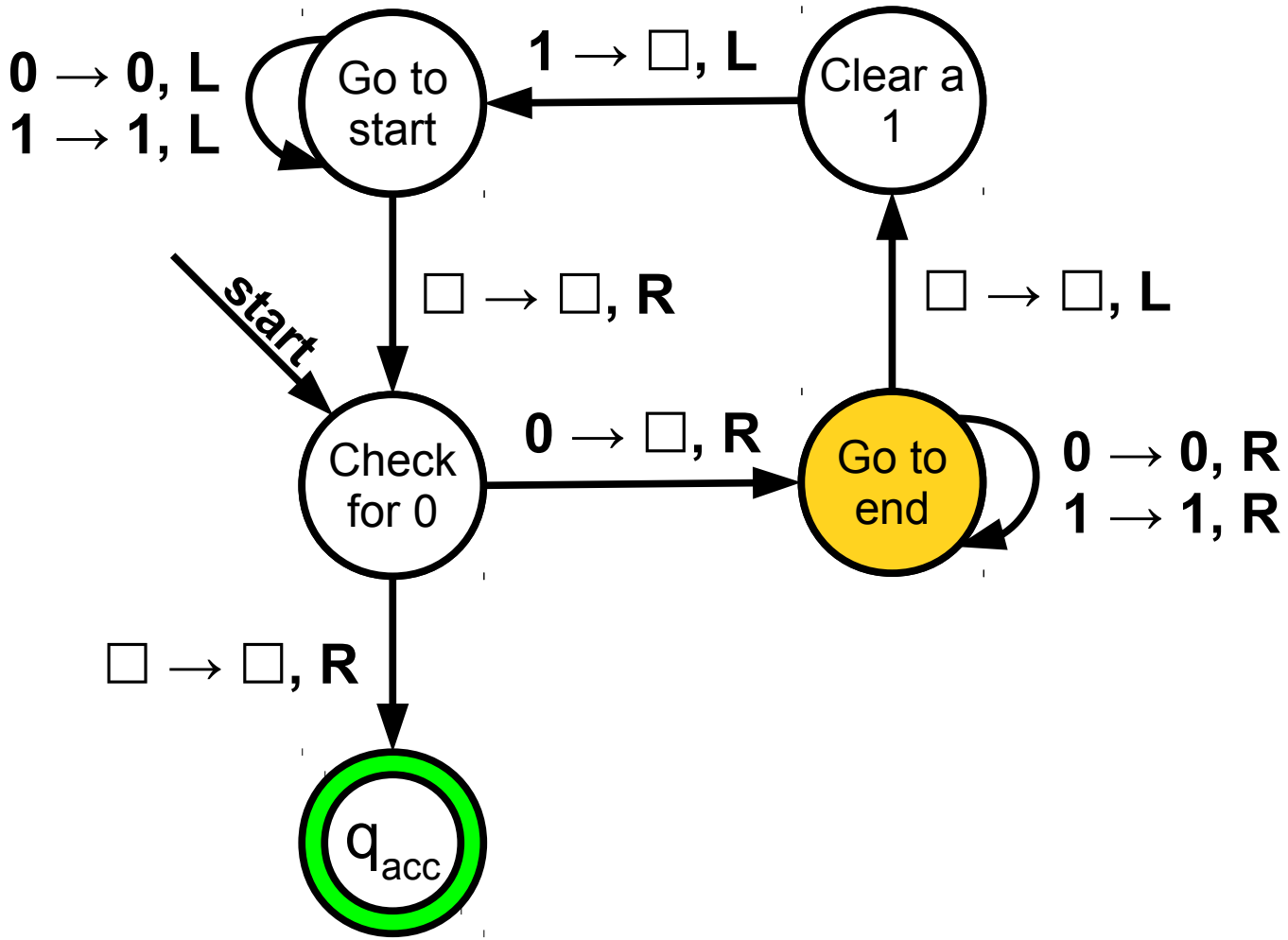
0 → 0, L
1 → 1, L
Go to start
1 → □, L
Clear a 1
start
□ → □, R
□ → □, L
Check for 0
0 → □, R
Go to end
0 → 0, R
1 → 1, R
□ → □, R
q_acc

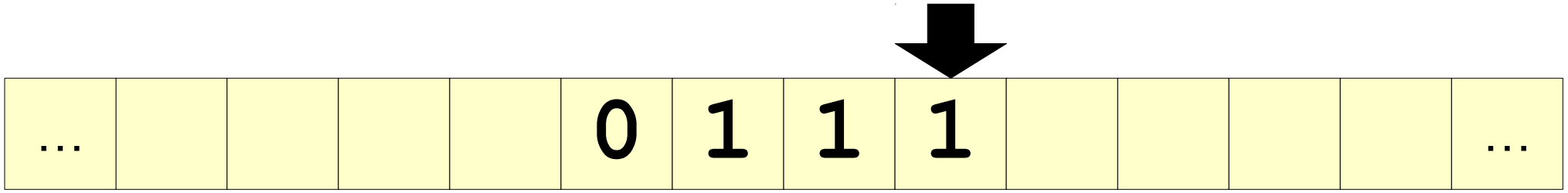
...
0
1
1
1
...

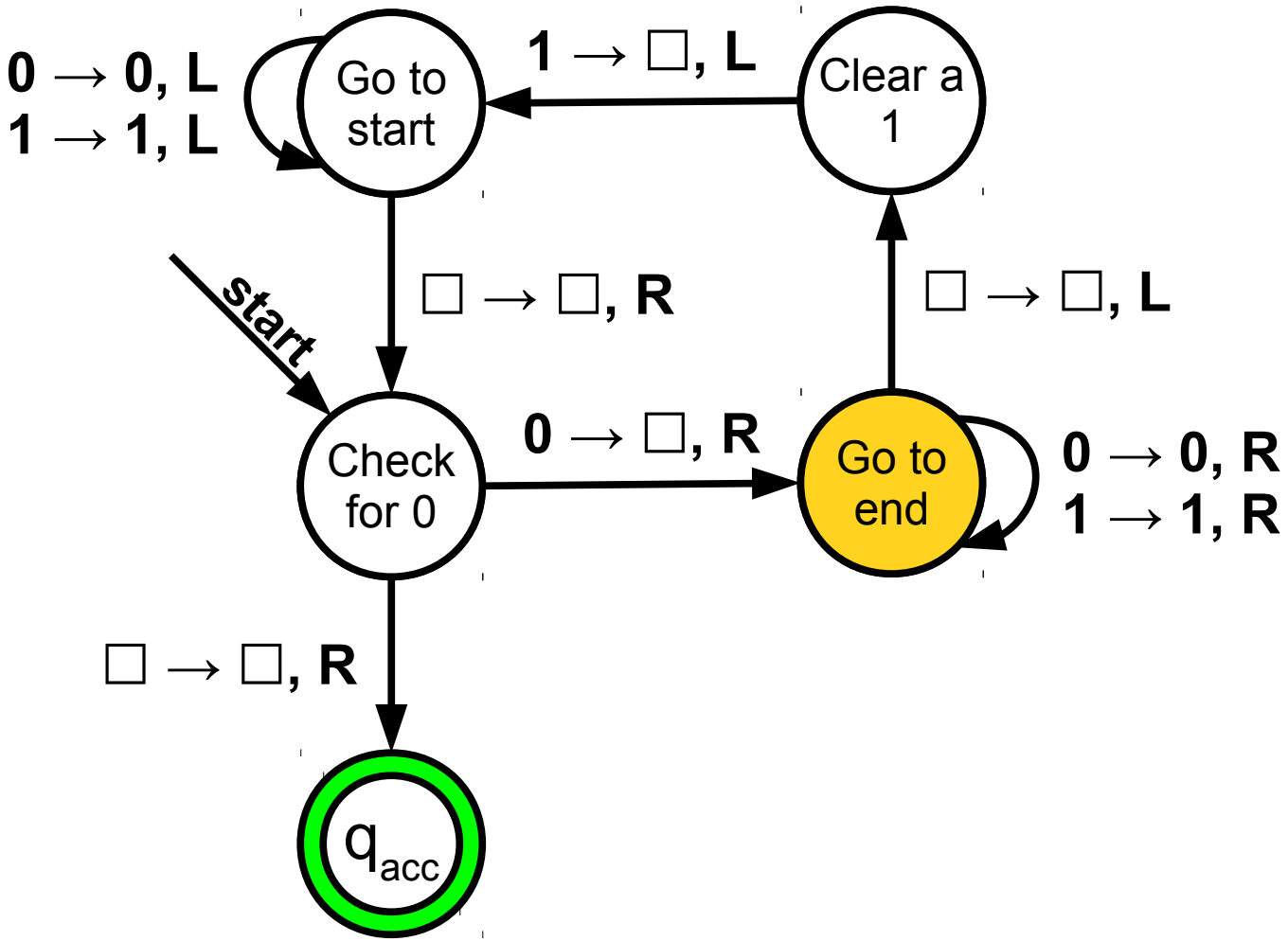
0 → 0, L
1 → 1, L
Go to start
1 → □, L
Clear a 1
start
□ → □, R
□ → □, L
Check for 0
0 → □, R
Go to end
0 → 0, R
1 → 1, R
□ → □, R
q_acc

…					0	1	1	1					…

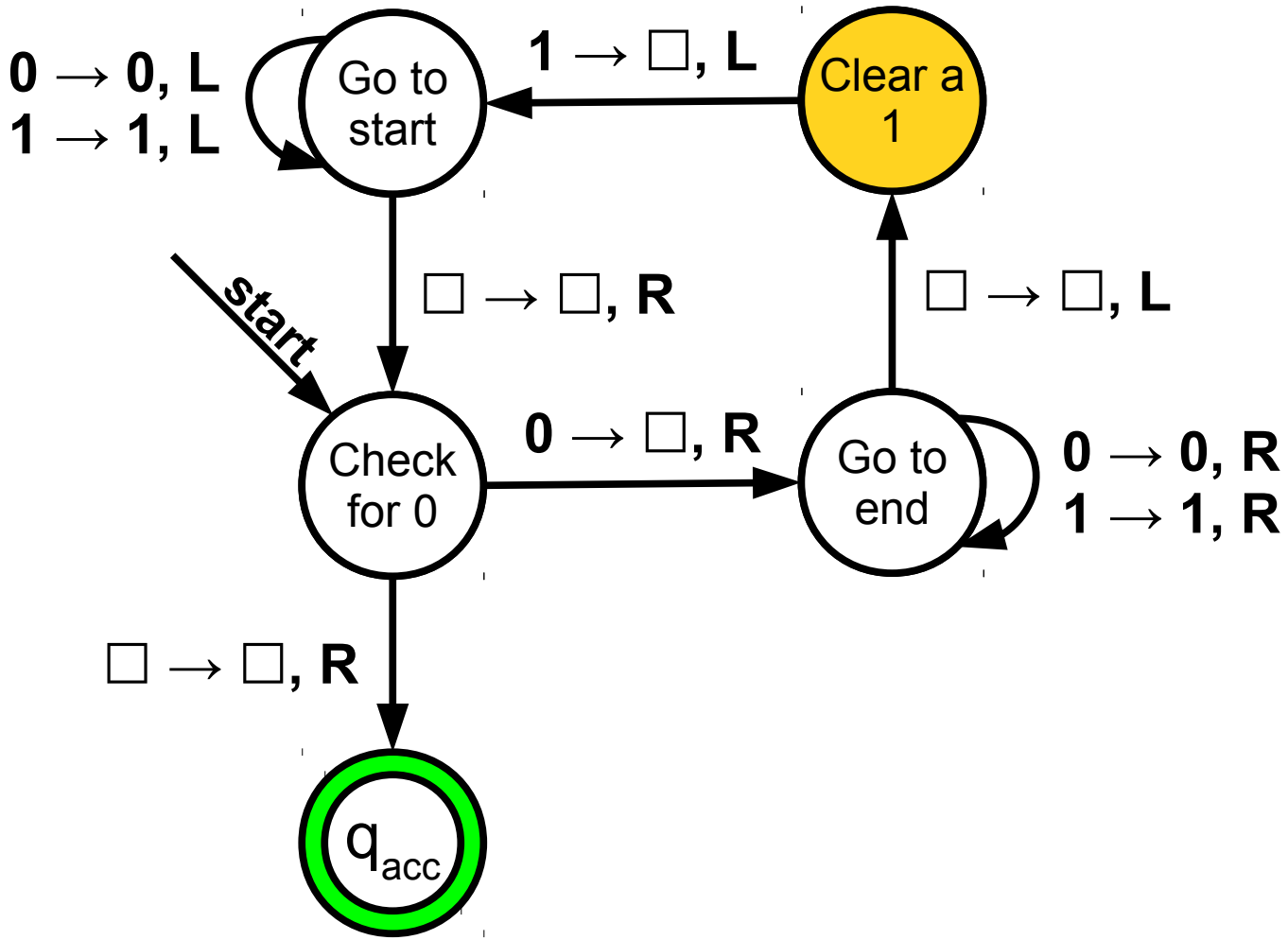
0 → 0, L
1 → 1, L
Go to start
1 → □, L
Clear a 1
start
□ → □, R
□ → □, L
Check for 0
0 → □, R
Go to end
0 → 0, R
1 → 1, R
□ → □, R
q_acc

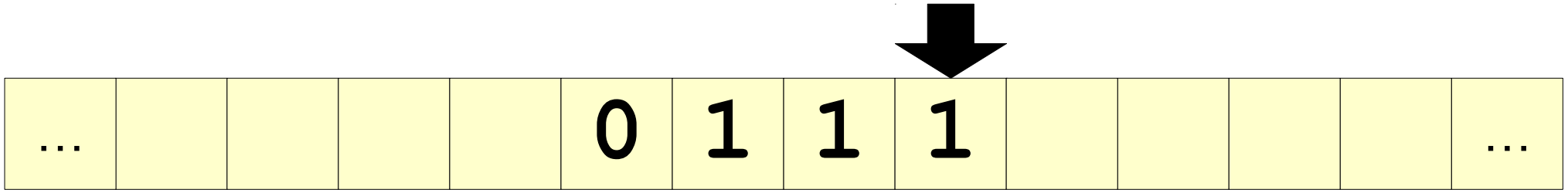
...
0
1
1
1
...

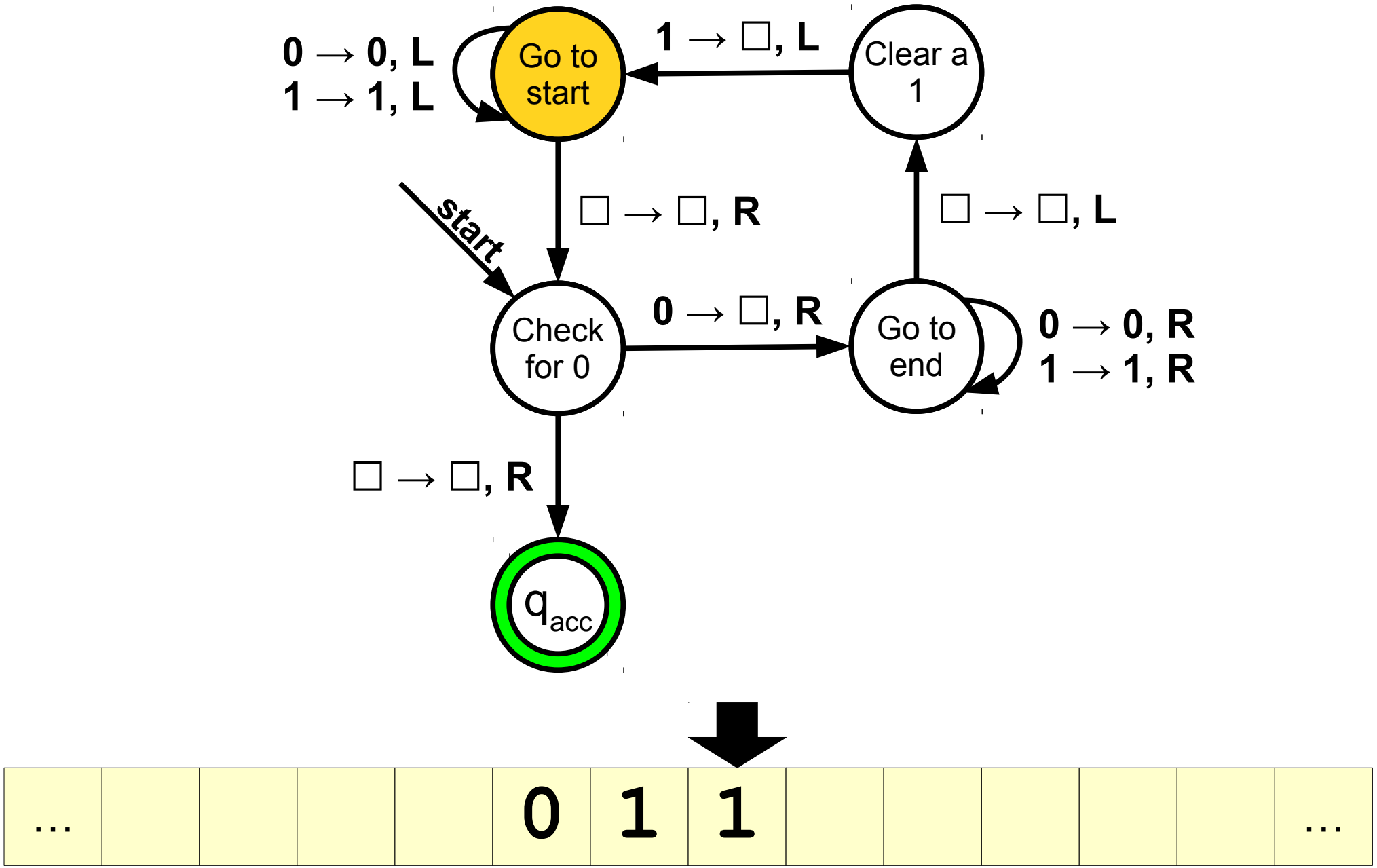
0 → 0, L
1 → 1, L
Go to start
1 → □, L
Clear a 1
start
□ → □, R
□ → □, L
Check for 0
0 → □, R
Go to end
0 → 0, R
1 → 1, R
□ → □, R
q_acc
...
0
1
1
...

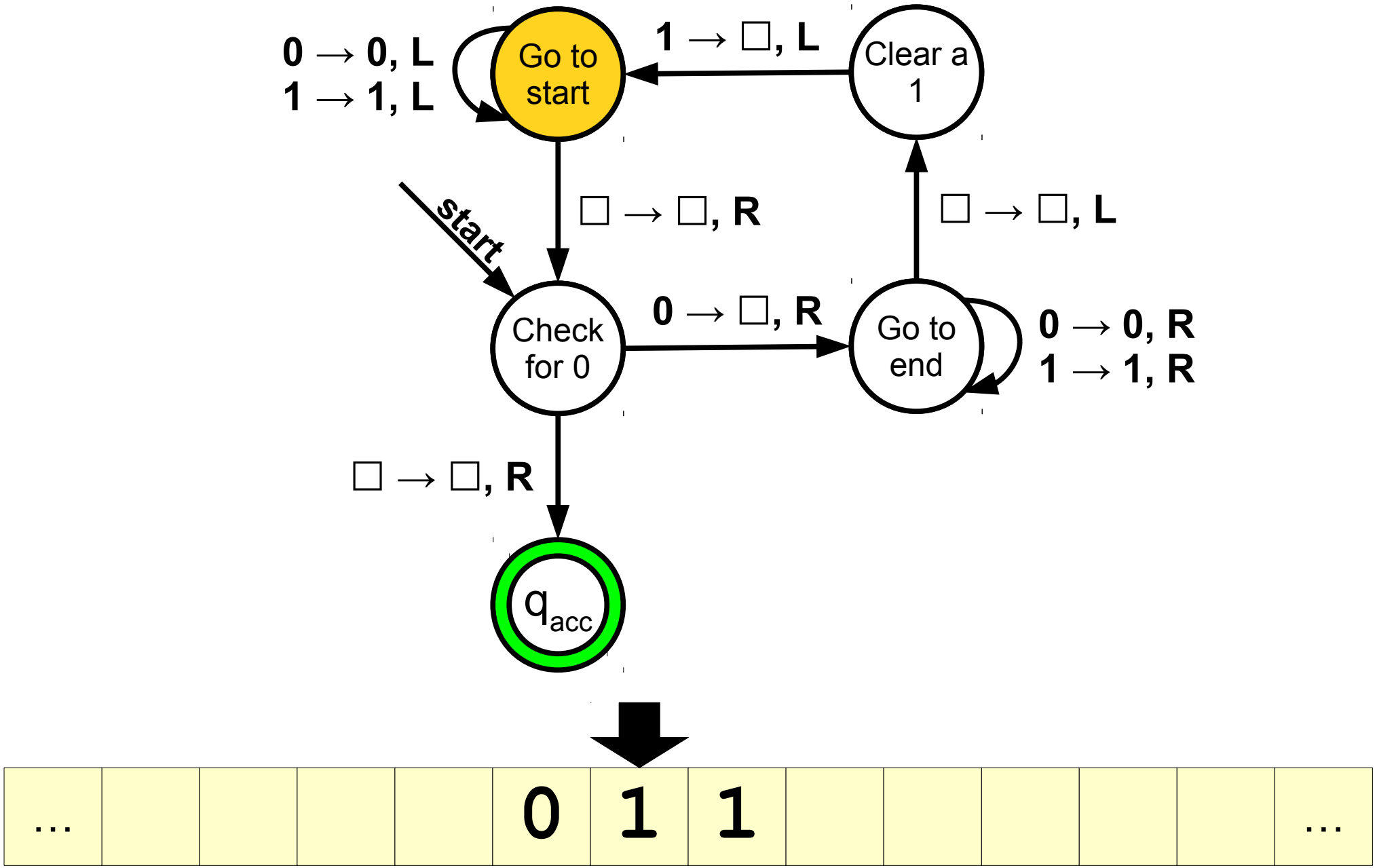
0 → 0, L
1 → 1, L
Go to start
1 → □, L
Clear a 1
start
□ → □, R
□ → □, L
Check for 0
0 → □, R
Go to end
0 → 0, R
1 → 1, R
□ → □, R
q_acc
...
0
1
1
...

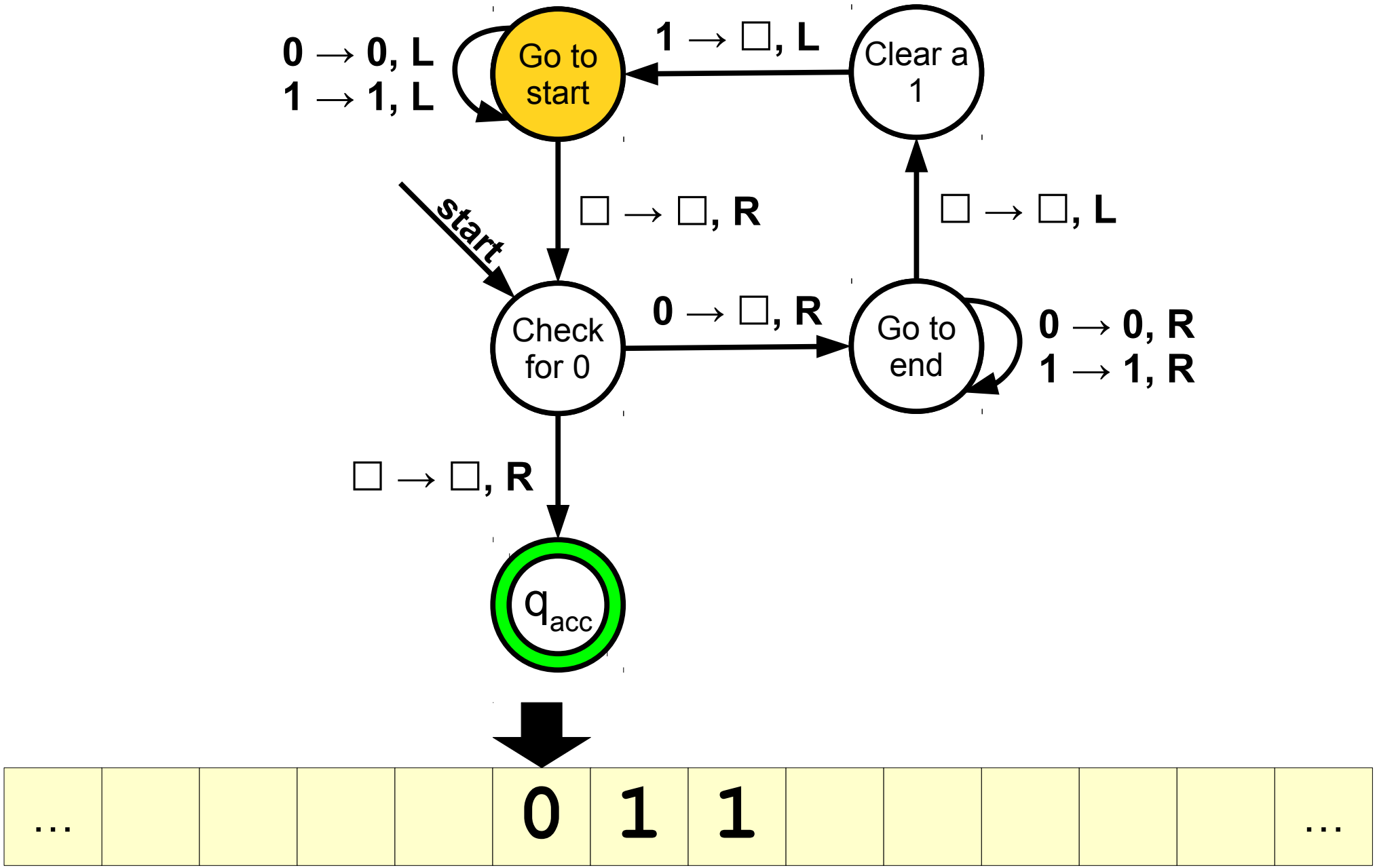
0 → 0, L
1 → 1, L
Go to start
1 → □, L
Clear a 1
start
□ → □, R
□ → □, L
Check for 0
0 → □, R
Go to end
0 → 0, R
1 → 1, R
□ → □, R
q_acc
...
0
1
1
...

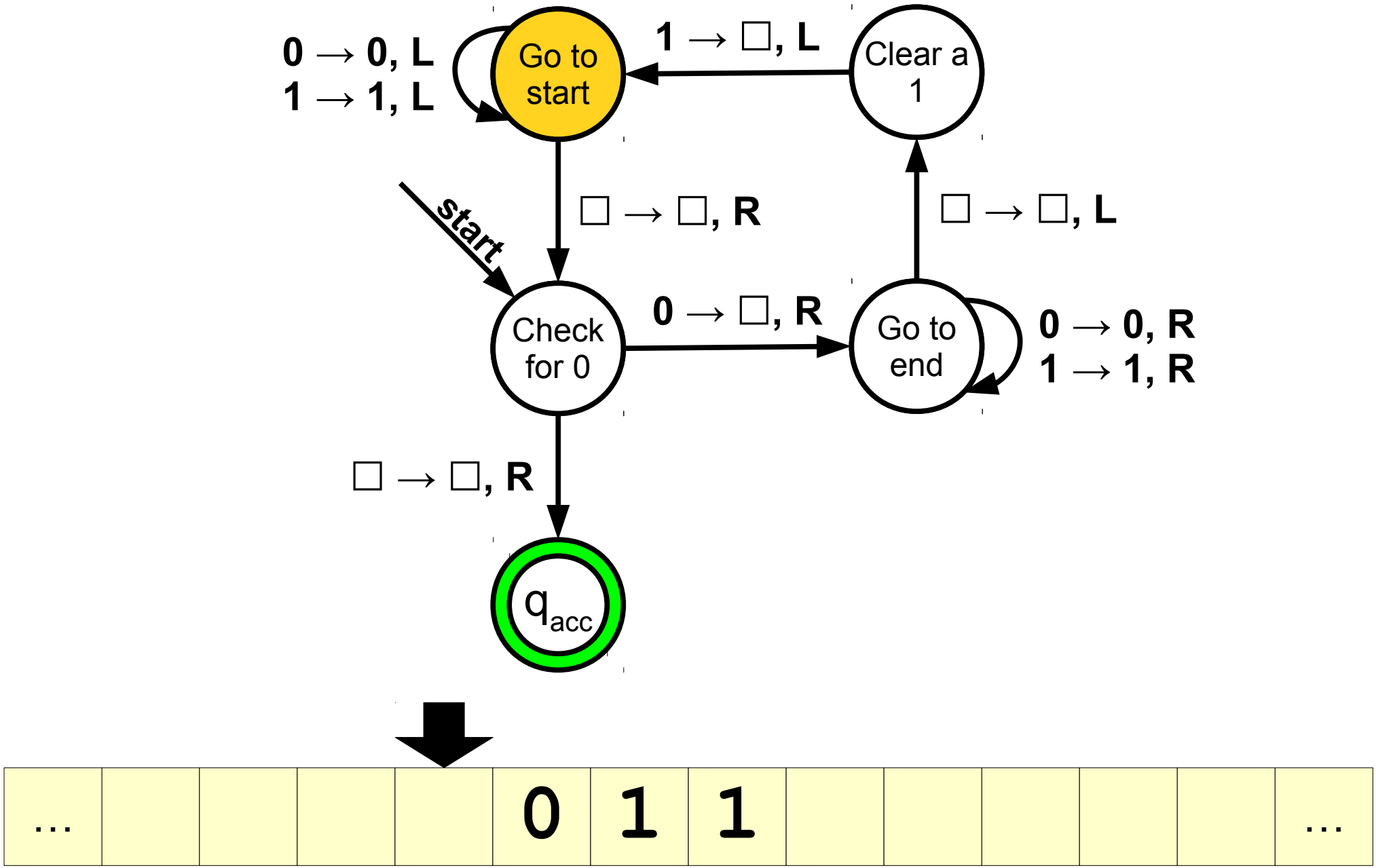
0 → 0, L
1 → 1, L
Go to start
1 → □, L
Clear a 1
start
□ → □, R
□ → □, L
Check for 0
0 → □, R
Go to end
0 → 0, R
1 → 1, R
□ → □, R
q_acc
...
0
1
1
...

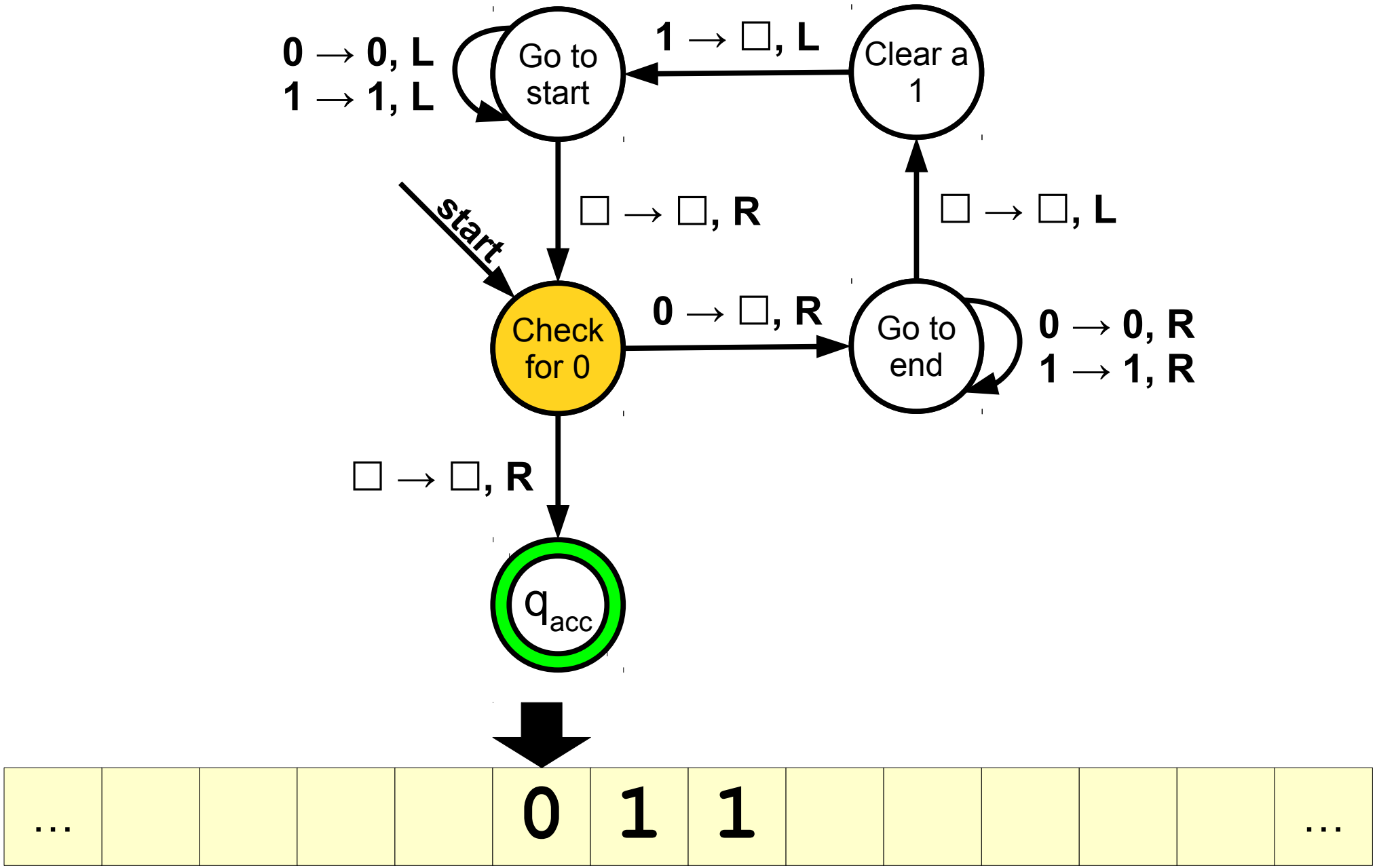
0 → 0, L
1 → 1, L
Go to start
1 → □, L
Clear a 1
start
□ → □, R
□ → □, L
Check for 0
0 → □, R
Go to end
0 → 0, R
1 → 1, R
□ → □, R
q_acc
...
0
1
1
...

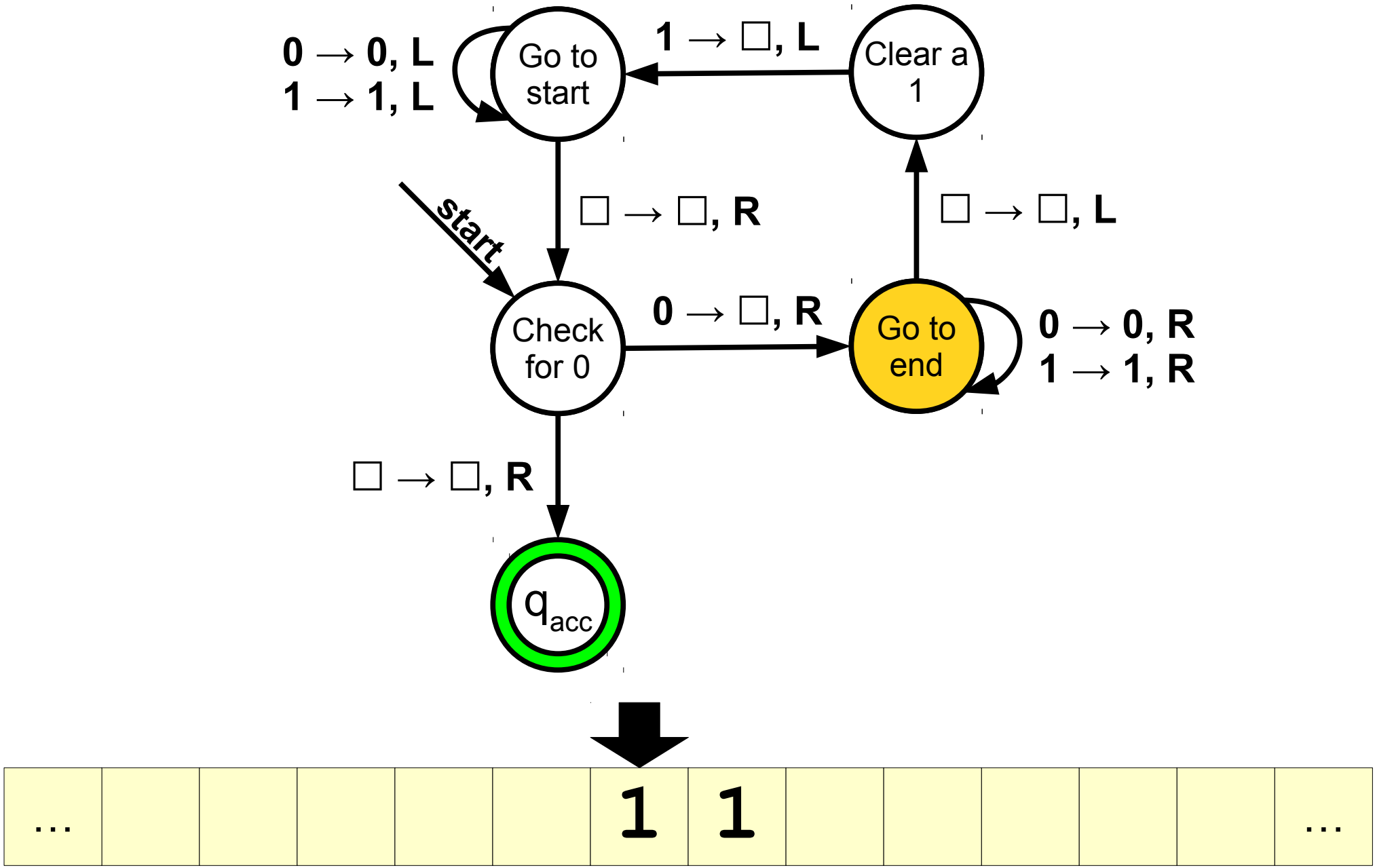
0 → 0, L
1 → 1, L
Go to start
1 → □, L
Clear a 1
start
□ → □, R
□ → □, L
Check for 0
0 → □, R
Go to end
0 → 0, R
1 → 1, R
□ → □, R
q_acc
...
1
1
...

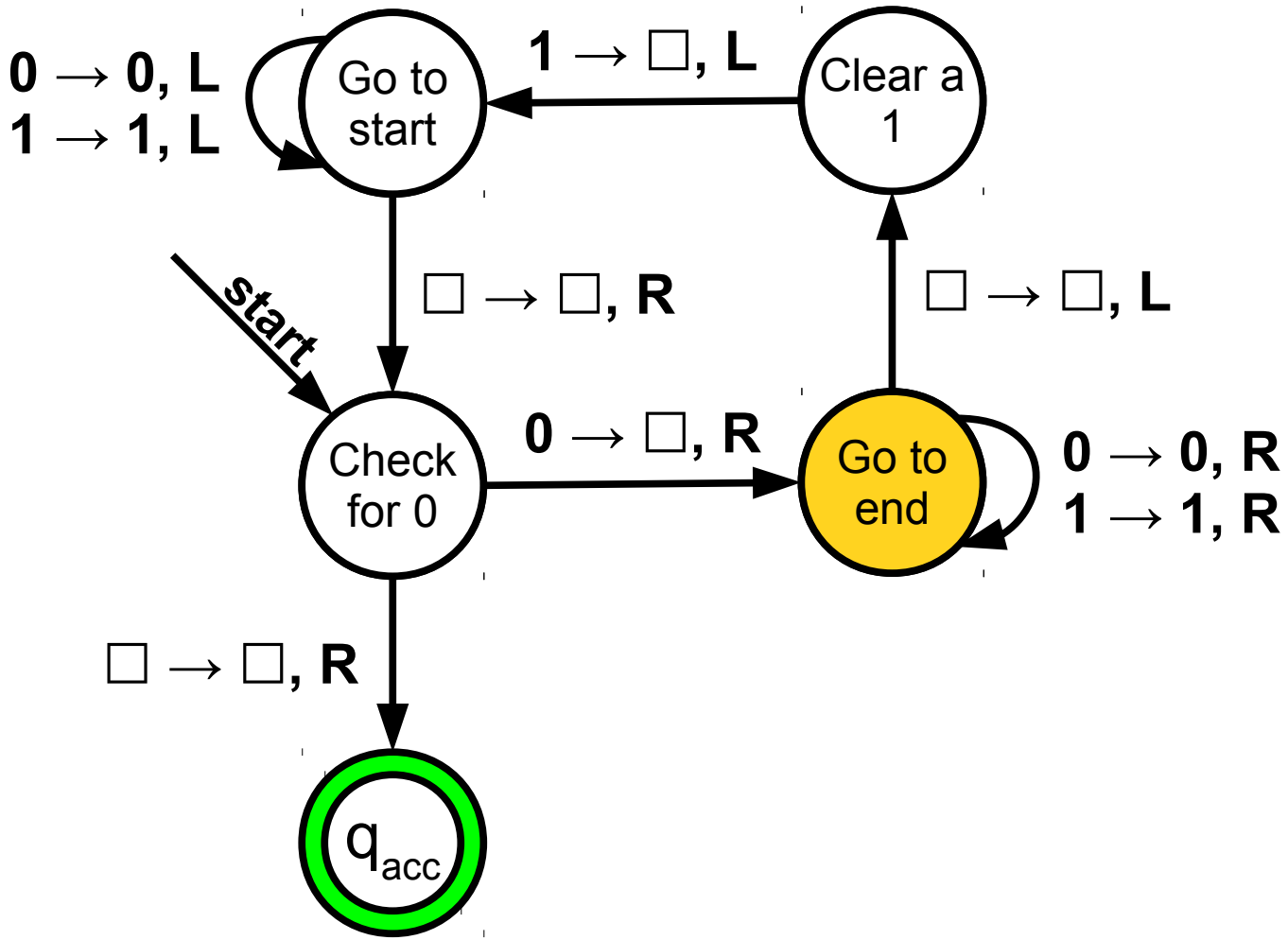
0 → 0, L
1 → 1, L
Go to start
1 → □, L
Clear a 1
start
□ → □, R
□ → □, L
Check for 0
0 → □, R
Go to end
0 → 0, R
1 → 1, R
□ → □, R
q_acc

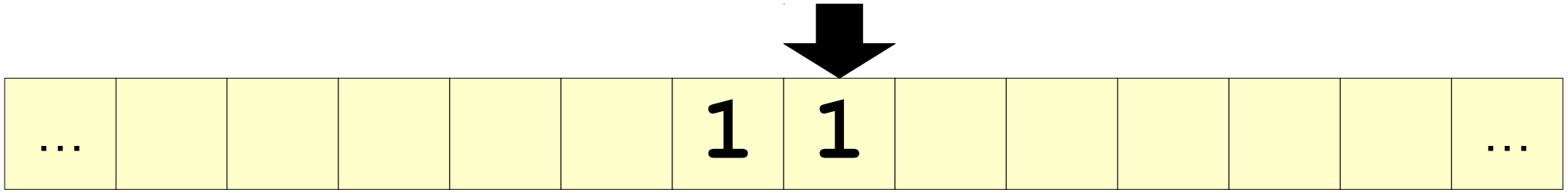
...
1
1
...

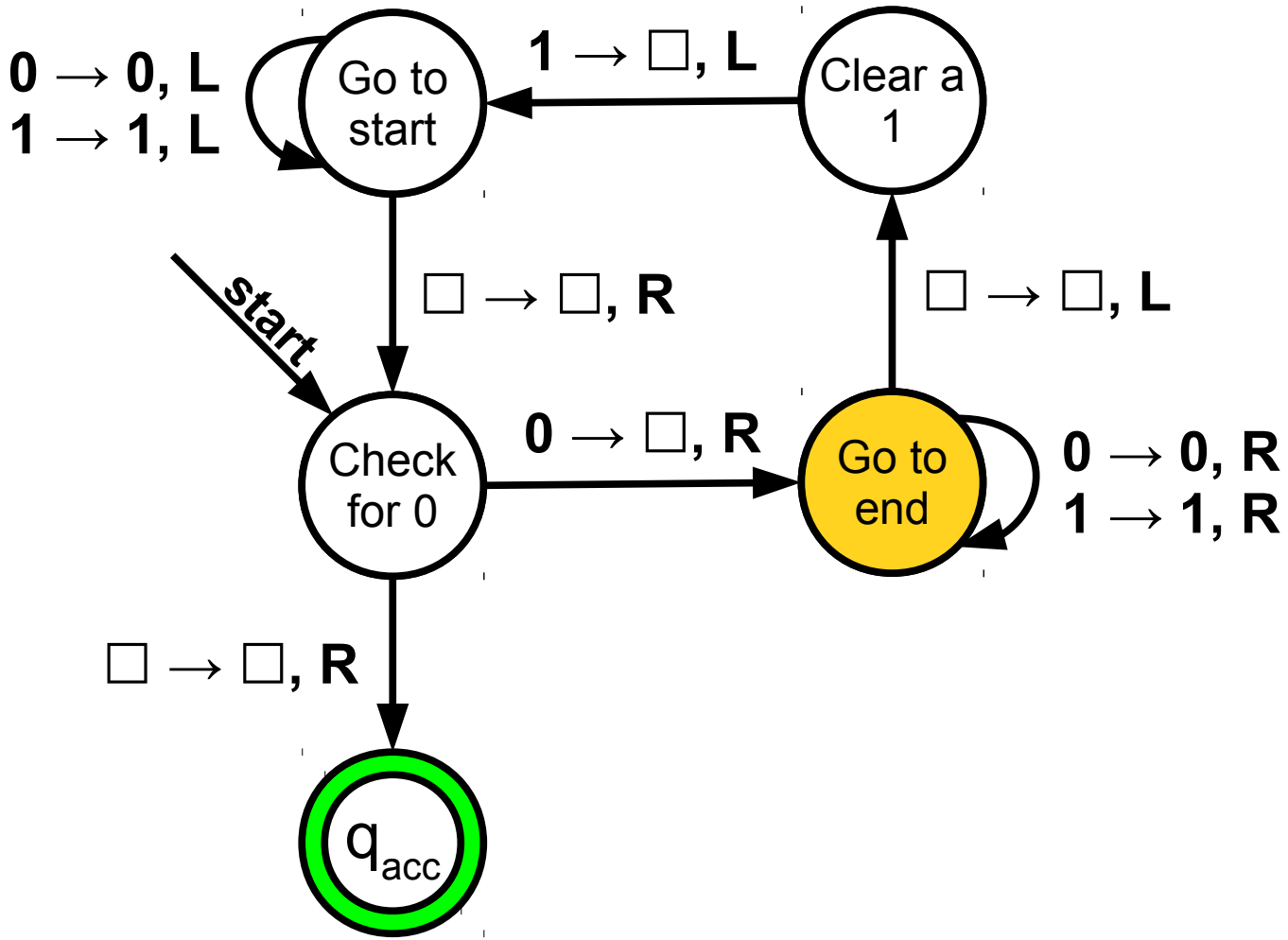
0 → 0, L
1 → 1, L
Go to start
1 → □, L
Clear a 1
start
□ → □, R
□ → □, L
Check for 0
0 → □, R
Go to end
0 → 0, R
1 → 1, R
□ → □, R
q_acc

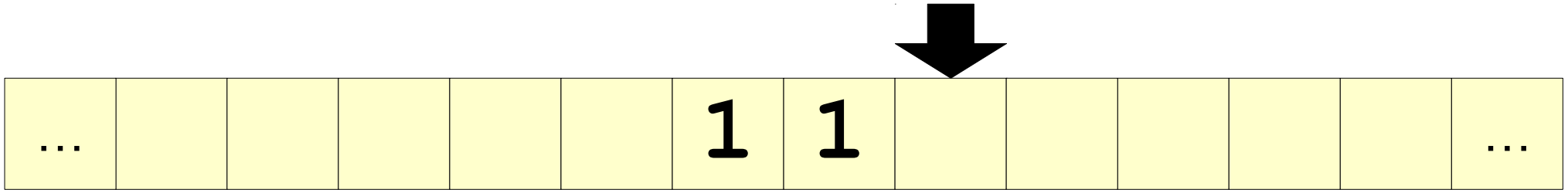
...
1
1
...

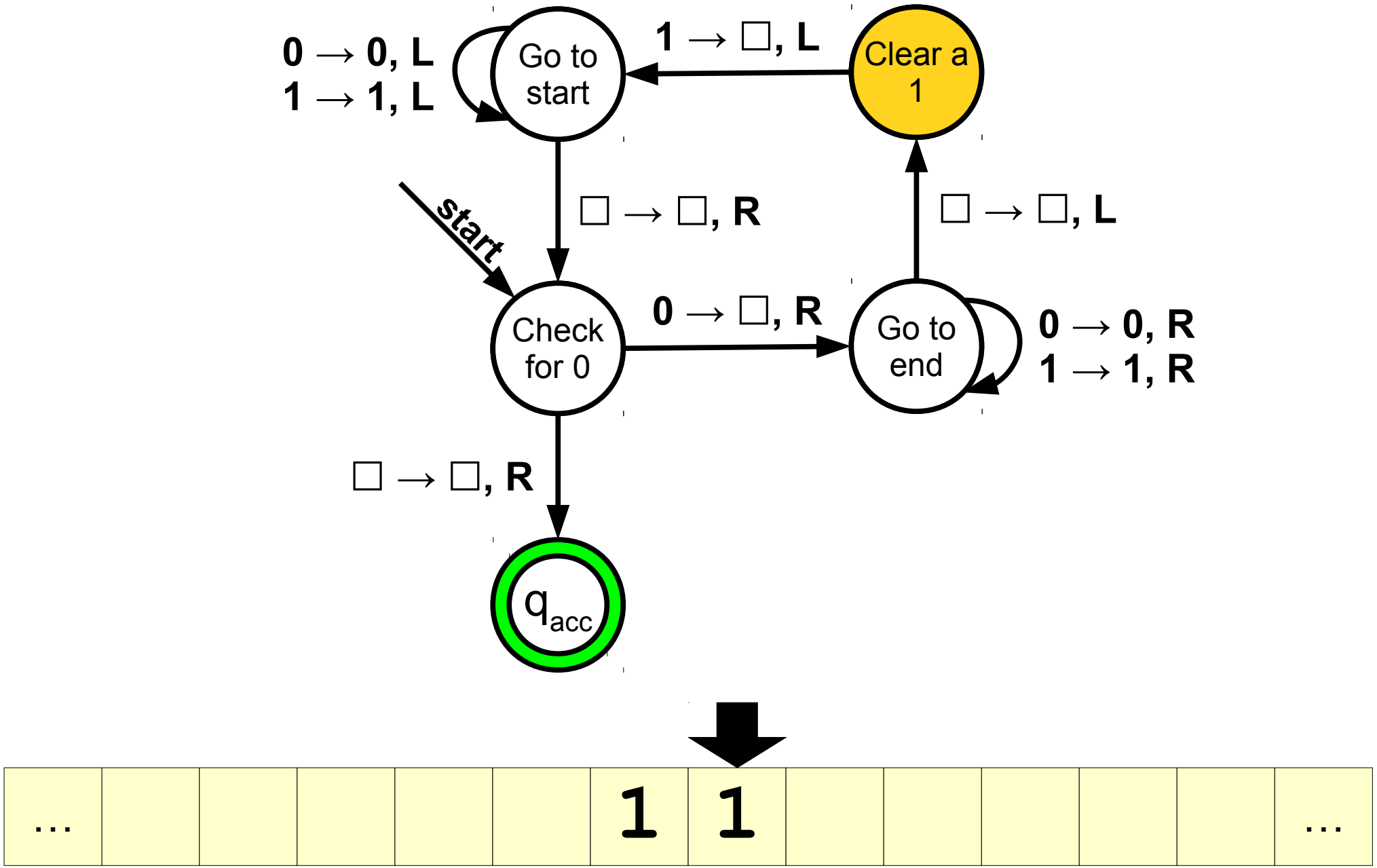
0 → 0, L
1 → 1, L
Go to start
1 → □, L
Clear a 1
start
□ → □, R
□ → □, L
Check for 0
0 → □, R
Go to end
0 → 0, R
1 → 1, R
□ → □, R
q_acc
...
1
1
...

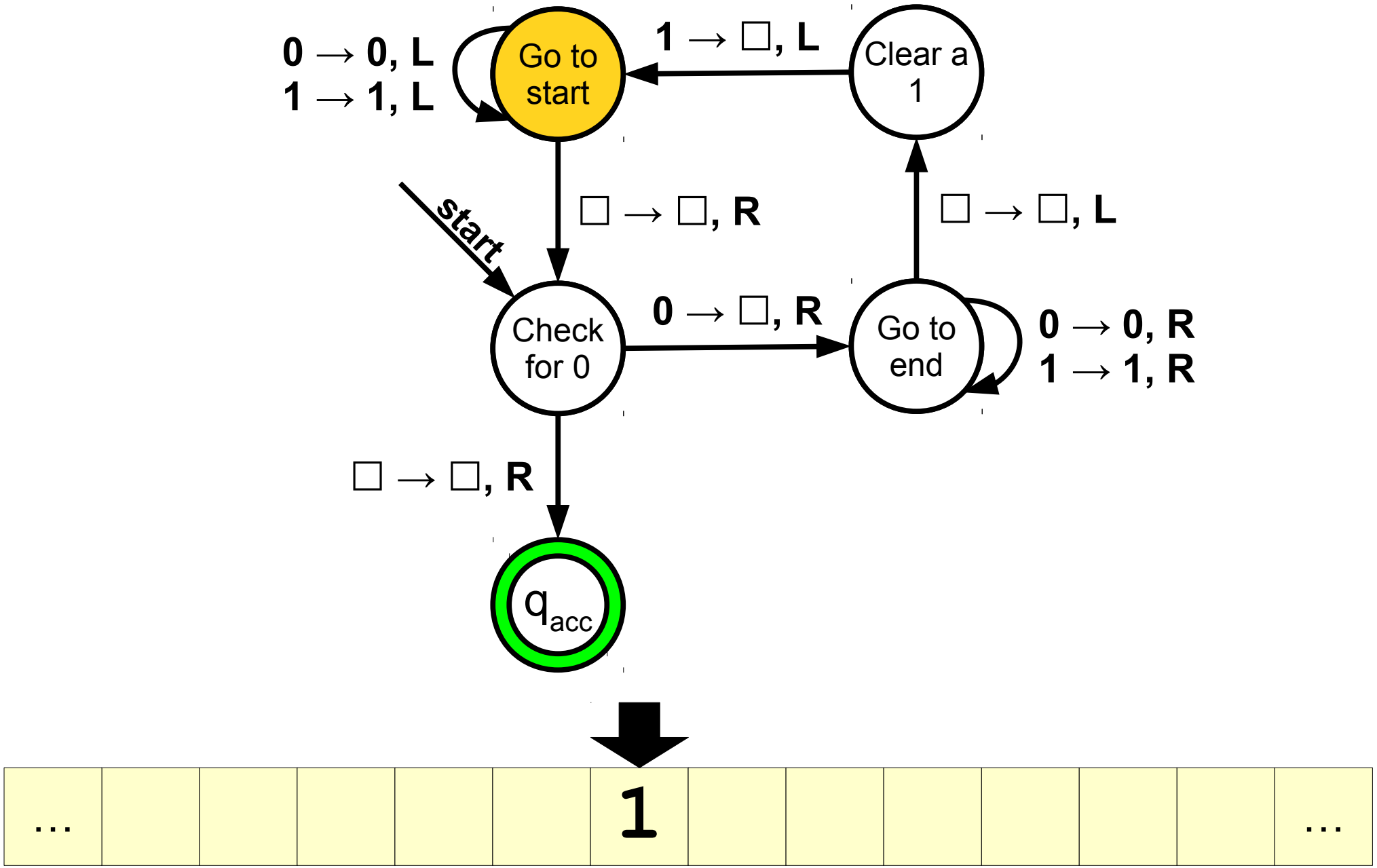
0 → 0, L
1 → 1, L
Go to start
1 → □, L
Clear a 1
start
□ → □, R
□ → □, L
Check for 0
0 → □, R
Go to end
0 → 0, R
1 → 1, R
□ → □, R
q_acc
...
1
...

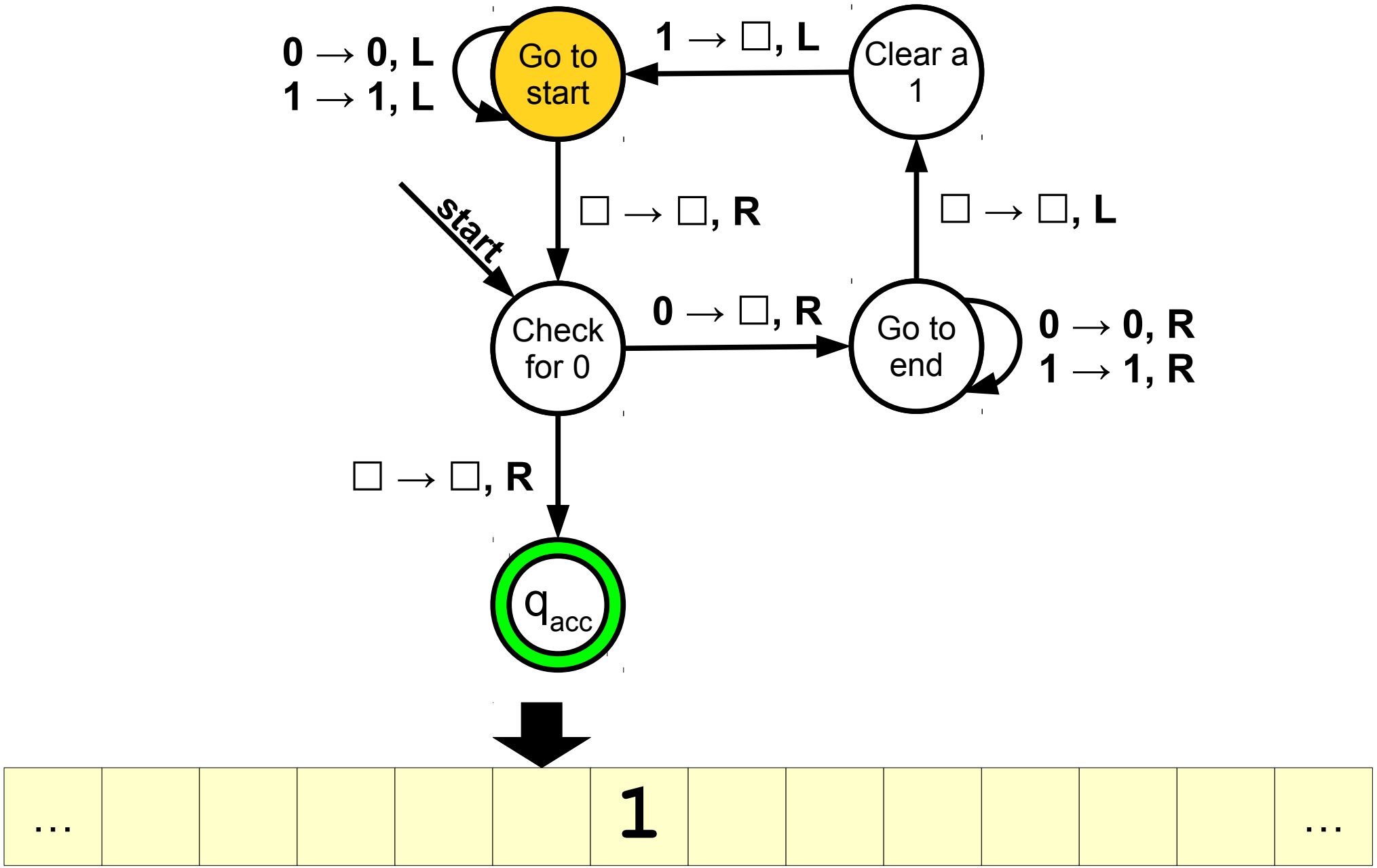
0 → 0, L
1 → 1, L
Go to start
1 → □, L
Clear a 1
start
□ → □, R
□ → □, L
Check for 0
0 → □, R
Go to end
0 → 0, R
1 → 1, R
□ → □, R
q_acc
...
1
...

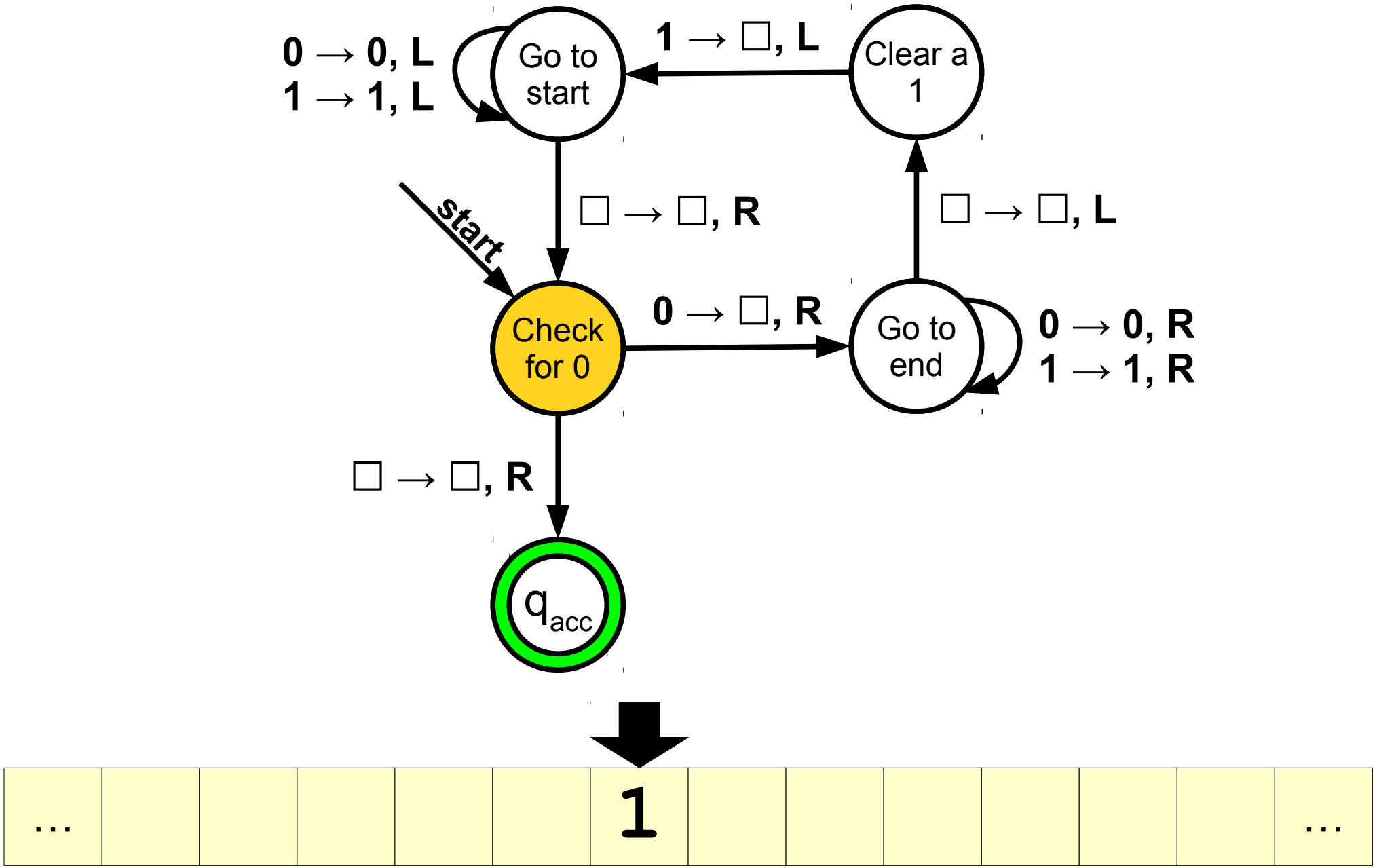
0 → 0, L
1 → 1, L
Go to start
1 → □, L
Clear a 1
start
□ → □, R
□ → □, L
Check for 0
0 → □, R
Go to end
0 → 0, R
1 → 1, R
□ → □, R
q_acc
...
1
...

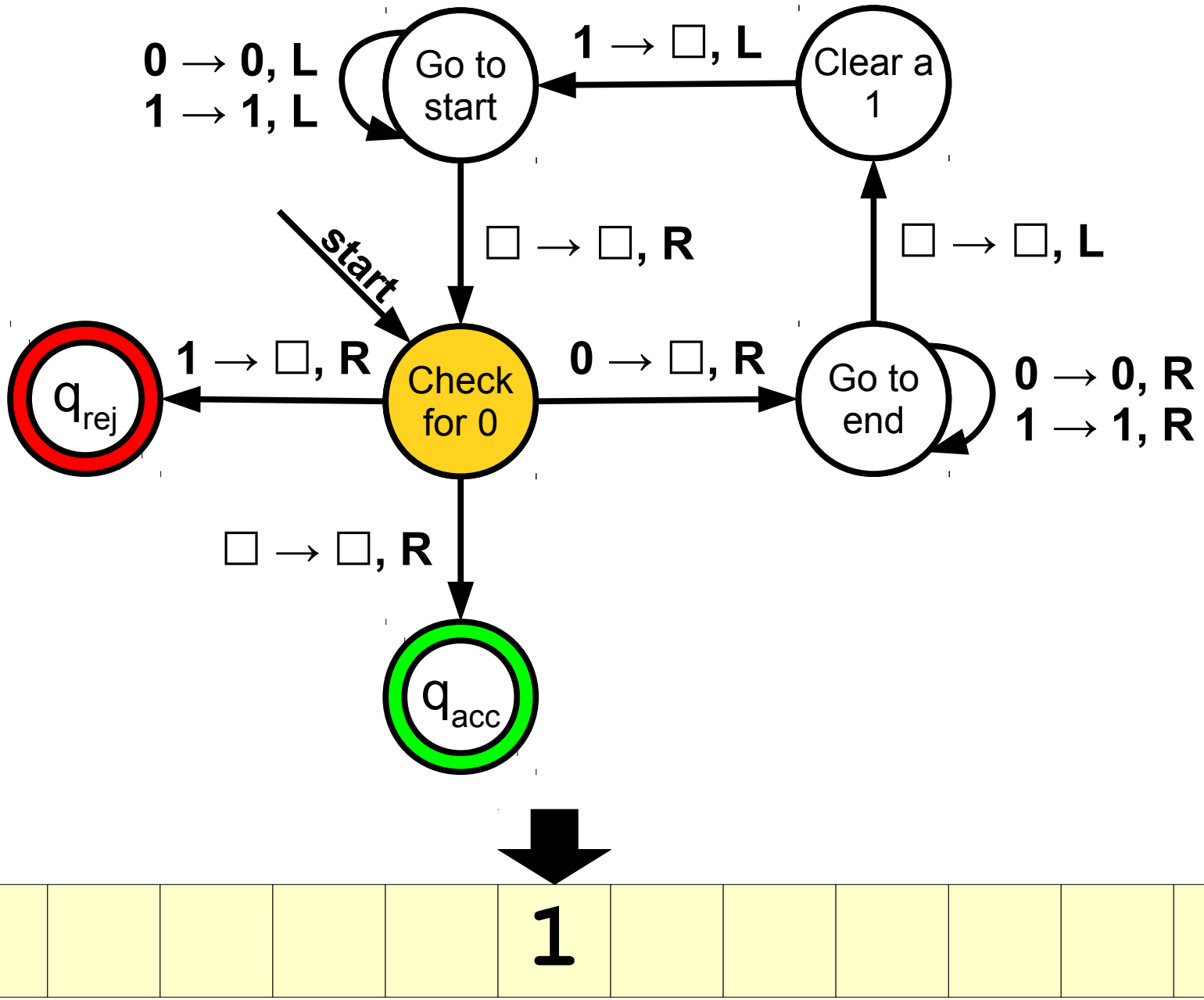
0 → 0, L
1 → 1, L
Go to start
1 → □, L
Clear a 1
start
□ → □, R
□ → □, L
1 → □, R
Check for 0
0 → □, R
Go to end
0 → 0, R
1 → 1, R
q_rej
□ → □, R
q_acc
...
1
...

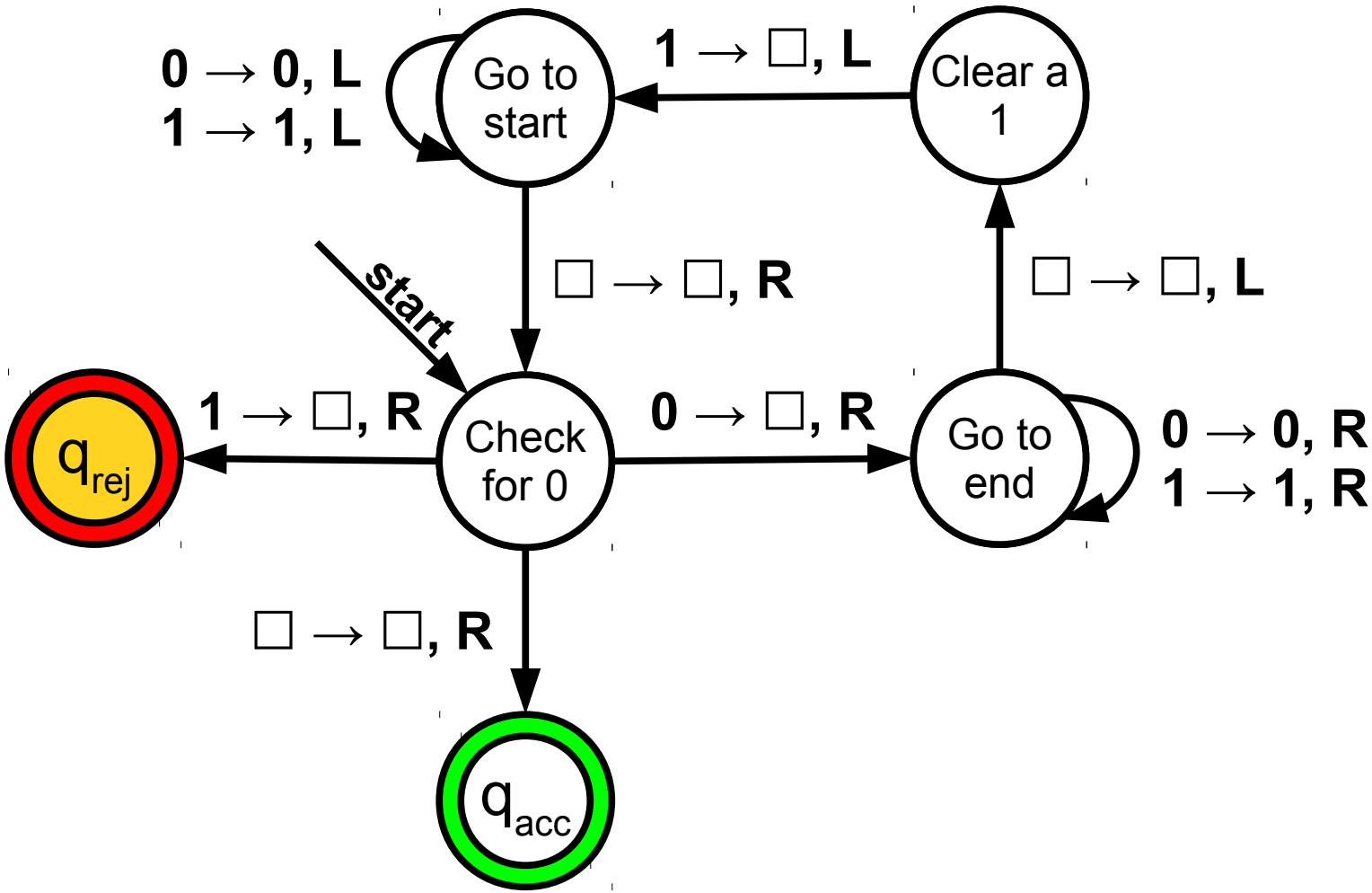
0 → 0, L
1 → 1, L
Go to start
1 → □, L
Clear a 1
start
□ → □, R
□ → □, L
1 → □, R
Check for 0
0 → □, R
Go to end
0 → 0, R
1 → 1, R
q_rej
□ → □, R
q_acc

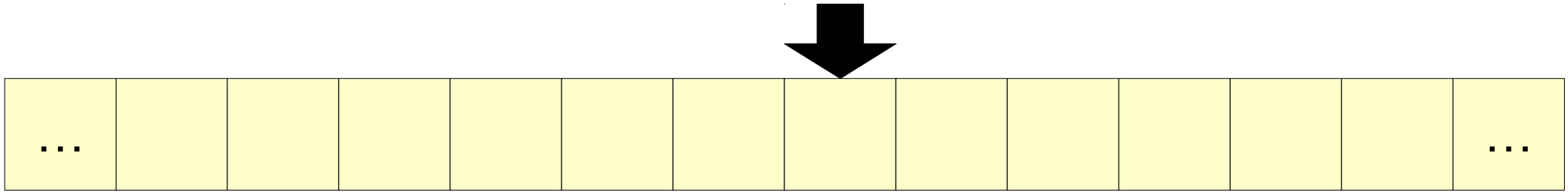
...
...

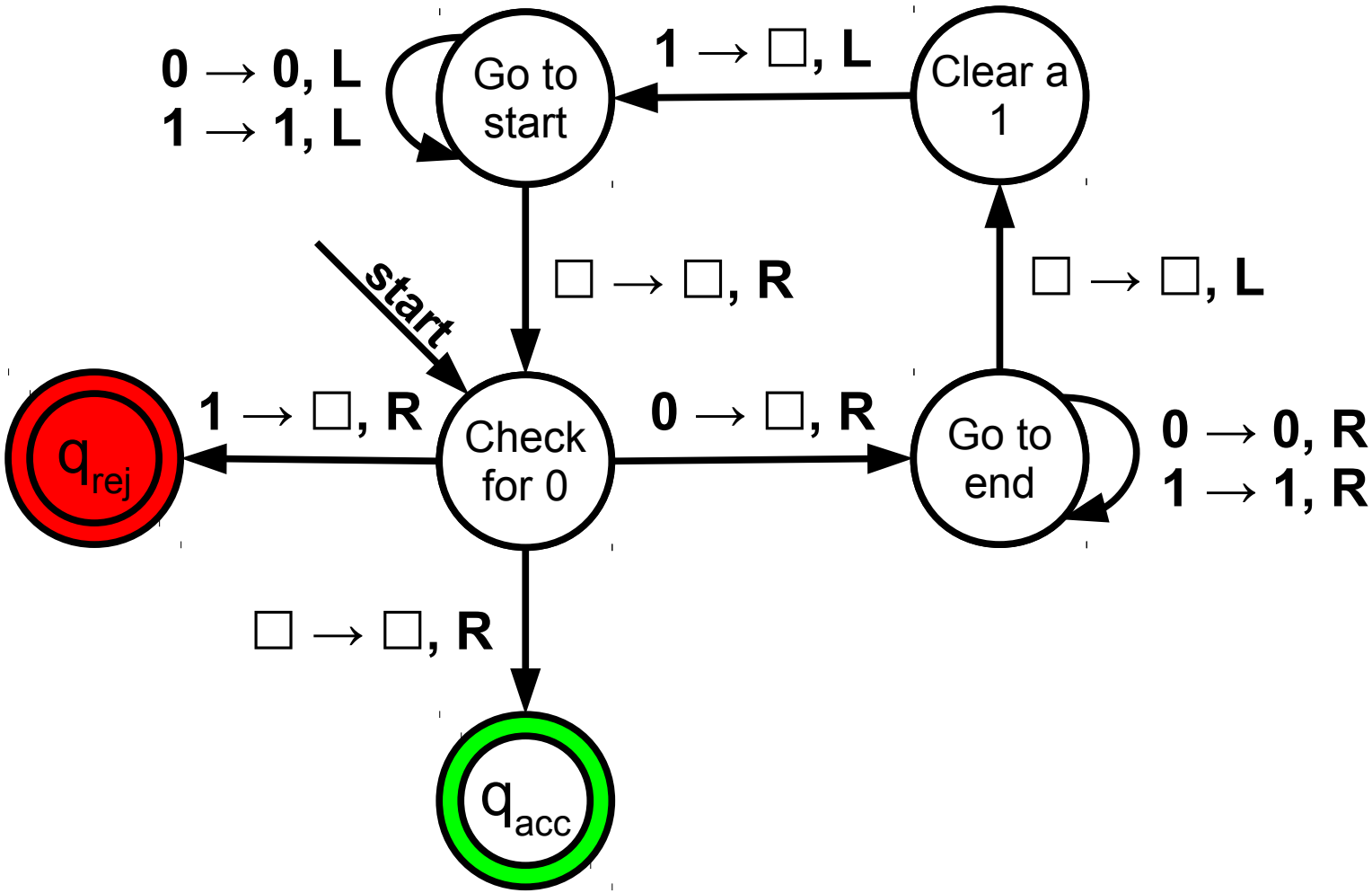
0 → 0, L
1 → 1, L
Go to start
1 → □, L
Clear a 1
start
□ → □, R
□ → □, L
1 → □, R
Check for 0
0 → □, R
Go to end
0 → 0, R
1 → 1, R
q_rej
□ → □, R
q_acc

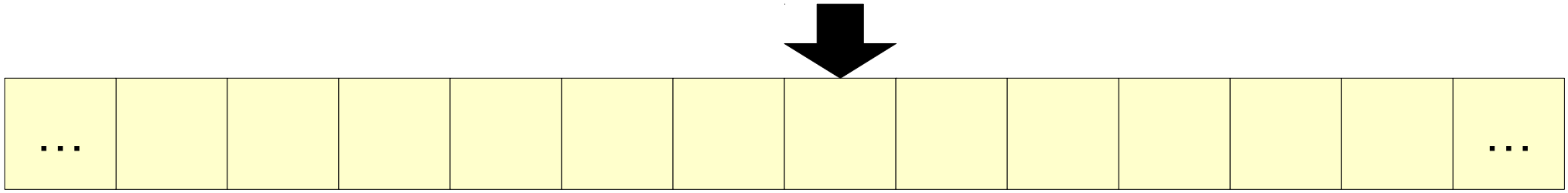
...
...

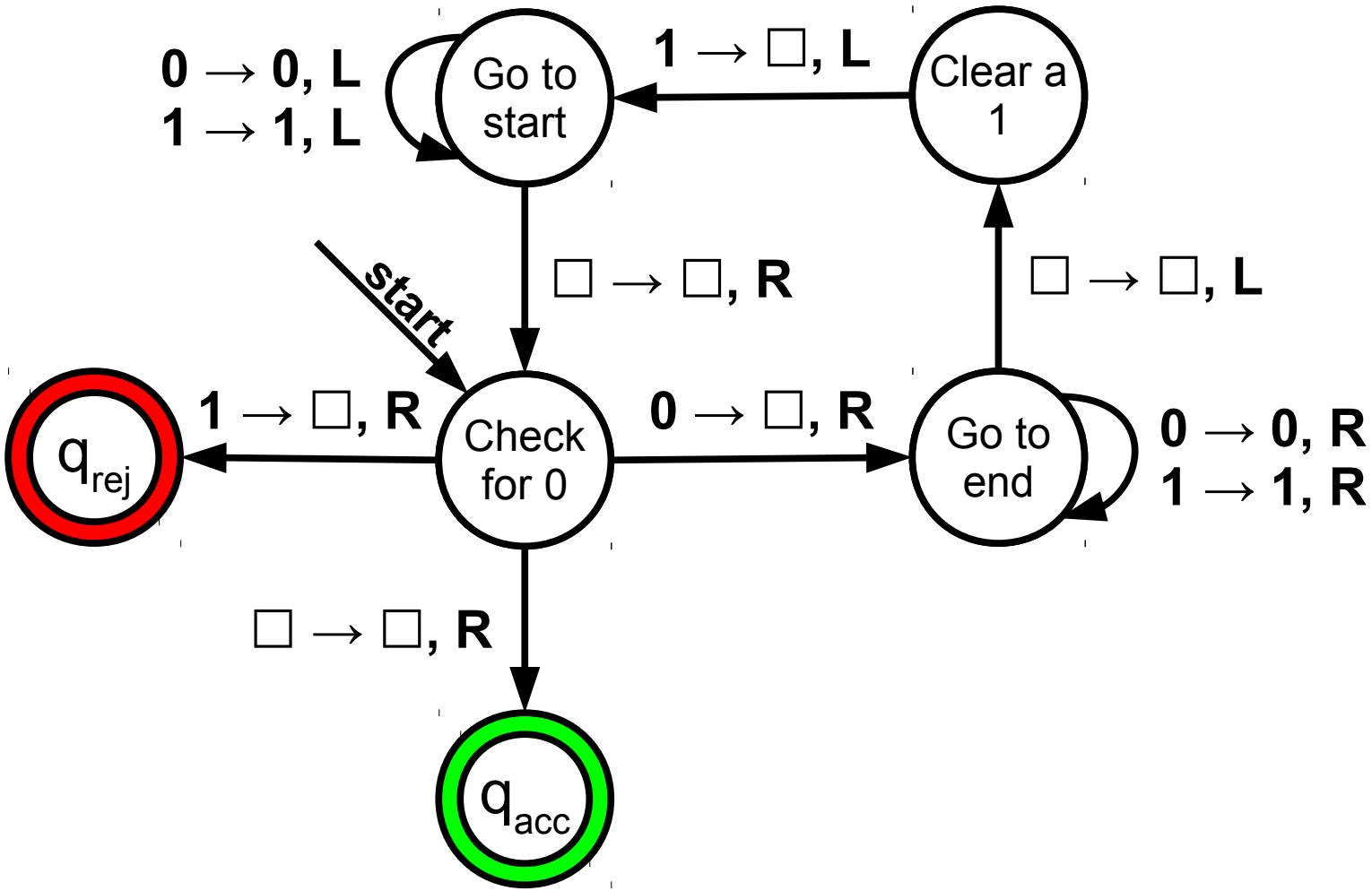
0 → 0, L
1 → 1, L
Go to start
1 → □, L
Clear a 1
start
□ → □, R
□ → □, L
1 → □, R
Check for 0
0 → □, R
Go to end
0 → 0, R
1 → 1, R
q_rej
□ → □, R
q_acc

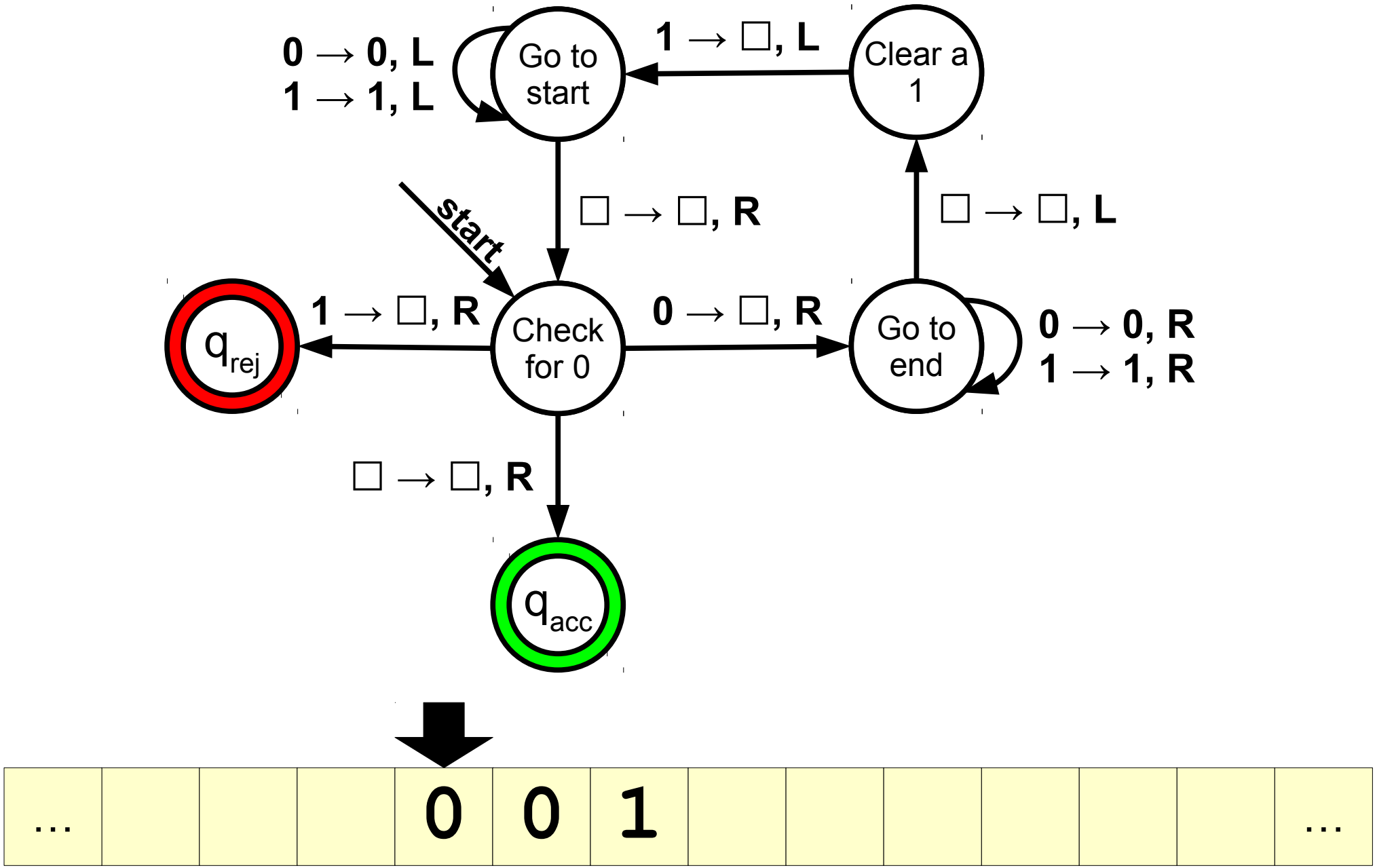
0 → 0, L
1 → 1, L
Go to start
1 → □, L
Clear a 1
start
□ → □, R
□ → □, L
1 → □, R
Check for 0
0 → □, R
Go to end
0 → 0, R
1 → 1, R
q_rej
□ → □, R
q_acc
...
0
0
1
...

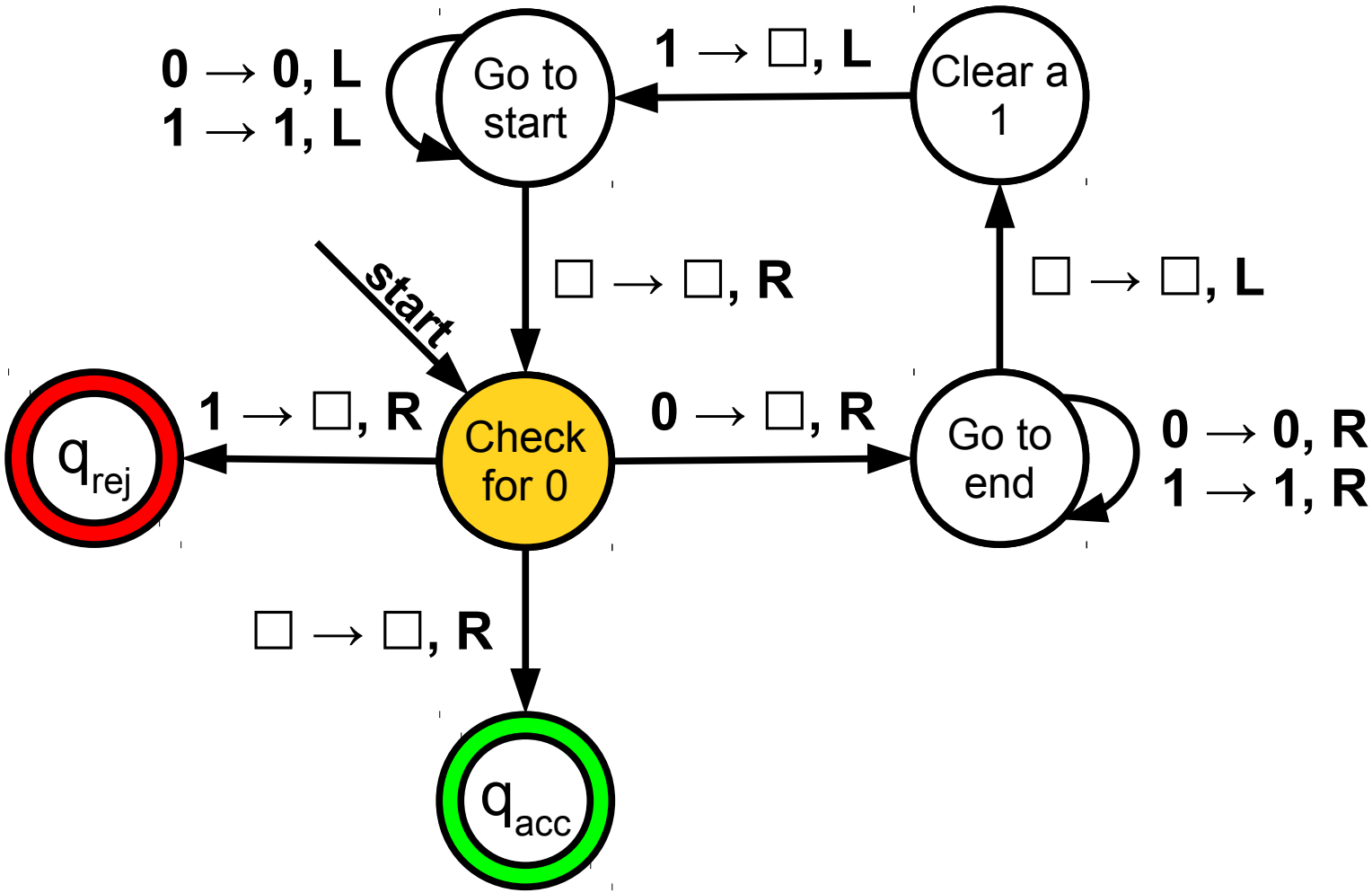
0 → 0, L
1 → 1, L
Go to start
1 → □, L
Clear a 1
start
□ → □, R
□ → □, L
1 → □, R
Check for 0
0 → □, R
Go to end
0 → 0, R
1 → 1, R
q_rej
□ → □, R
q_acc

…				0	0	1							…

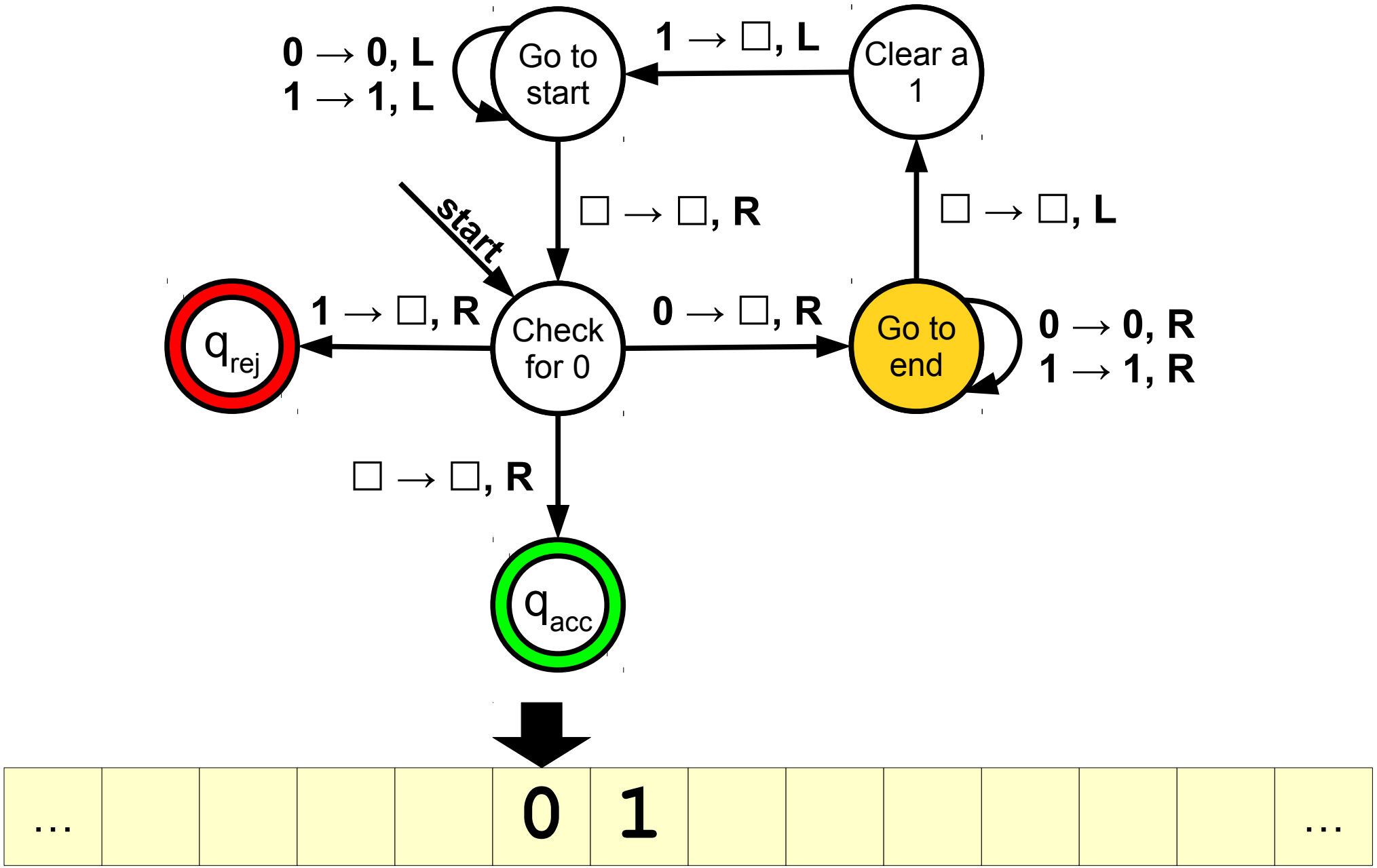
0 → 0, L
1 → 1, L
Go to start
1 → □, L
Clear a 1
start
□ → □, R
□ → □, L
1 → □, R
Check for 0
0 → □, R
Go to end
0 → 0, R
1 → 1, R
q_rej
□ → □, R
q_acc
...
0
1
...

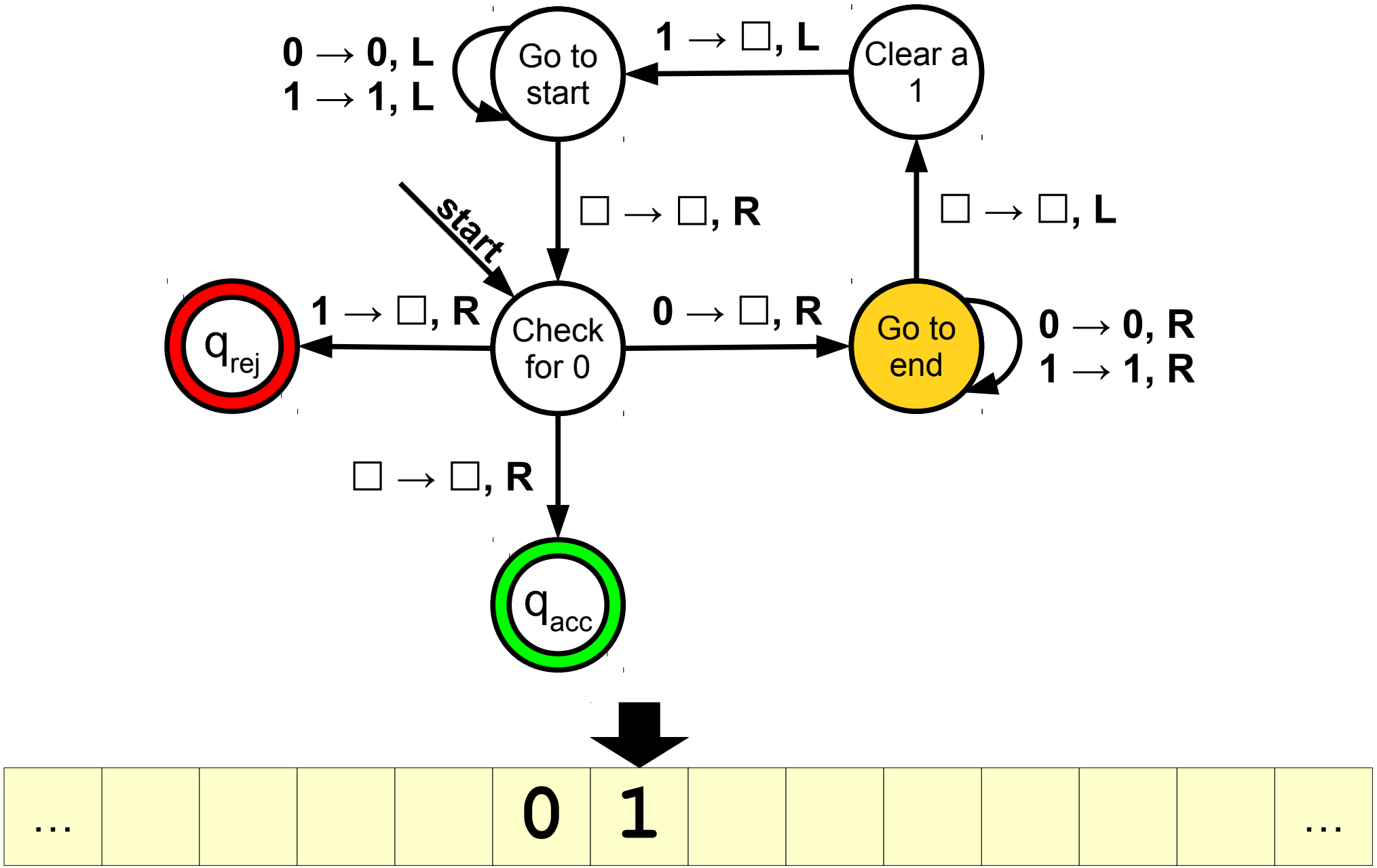
0 → 0, L
1 → 1, L
Go to start
1 → □, L
Clear a 1
start
□ → □, R
□ → □, L
1 → □, R
Check for 0
0 → □, R
Go to end
0 → 0, R
1 → 1, R
q_rej
□ → □, R
q_acc
...
0
1
...

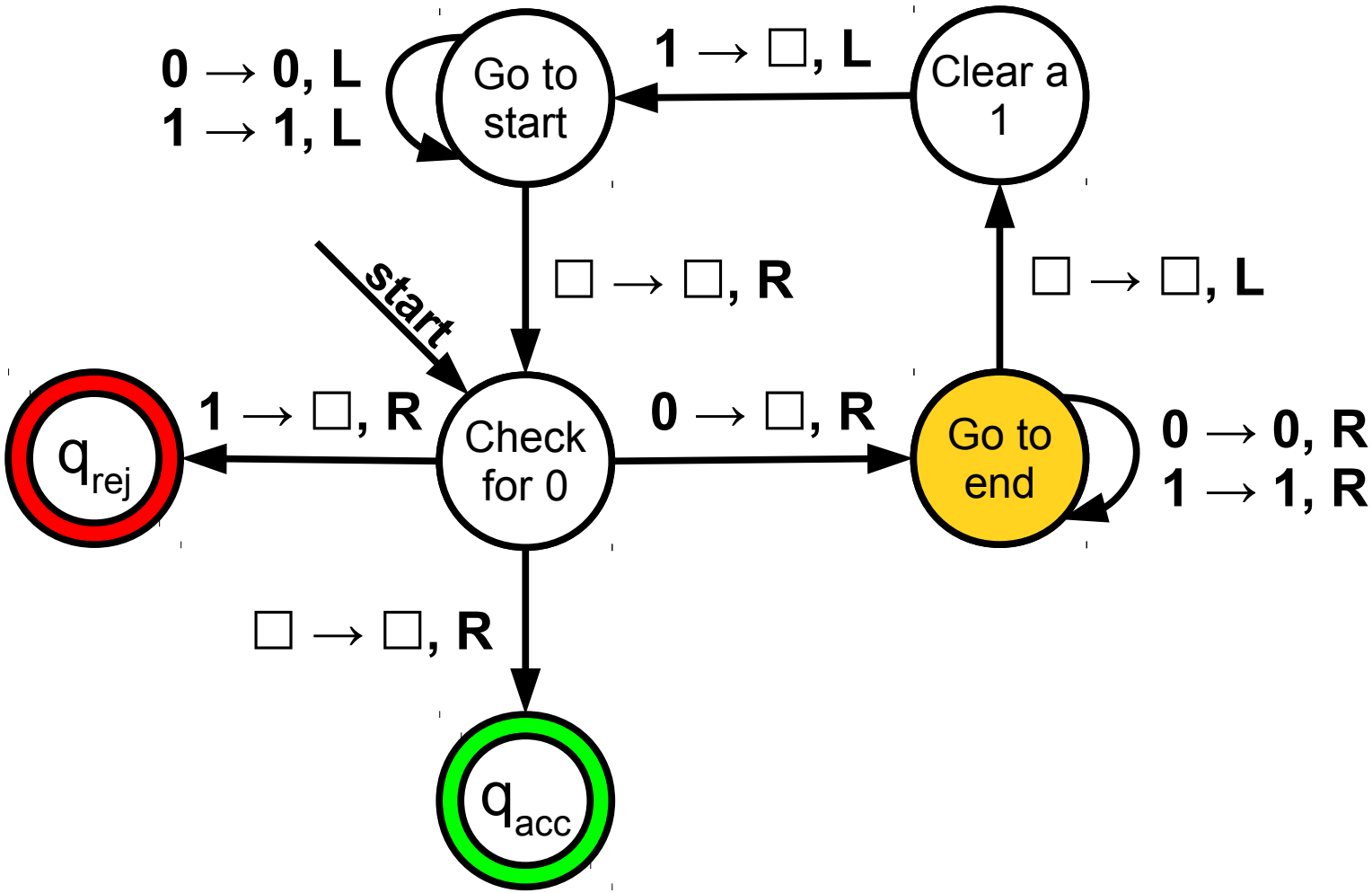
0 → 0, L
1 → 1, L
Go to start
1 → □, L
Clear a 1
start
□ → □, R
□ → □, L
1 → □, R
Check for 0
0 → □, R
Go to end
0 → 0, R
1 → 1, R
q_rej
□ → □, R
q_acc

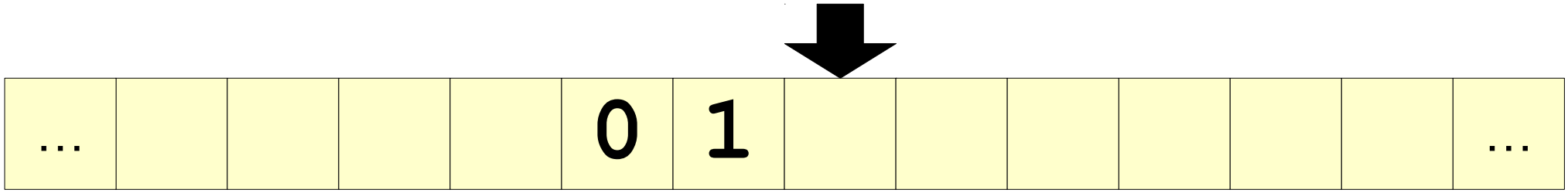
...
0
1
...

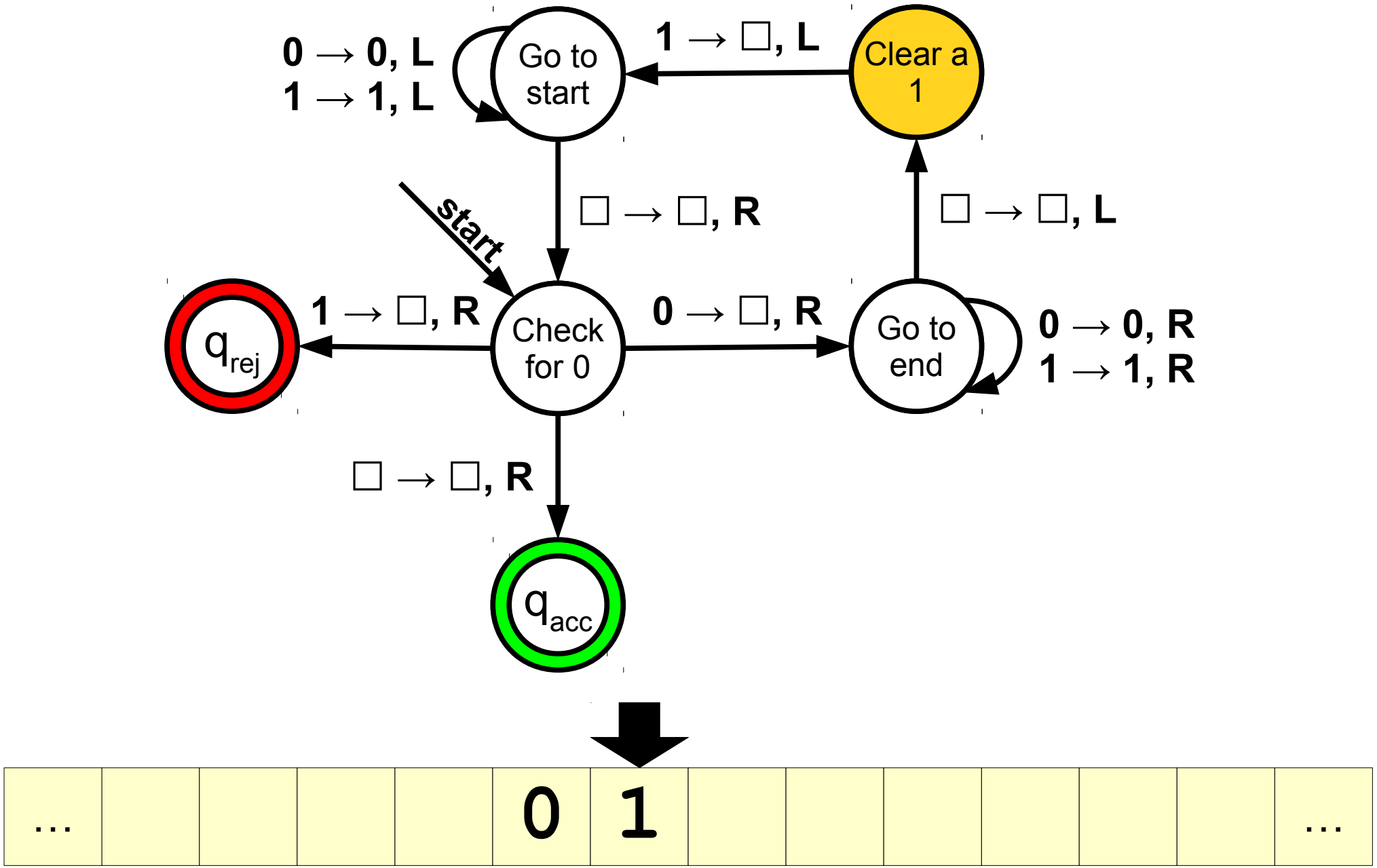
0 → 0, L
1 → 1, L
Go to start
1 → □, L
Clear a 1
start
□ → □, R
□ → □, L
1 → □, R
Check for 0
0 → □, R
Go to end
0 → 0, R
1 → 1, R
q_rej
□ → □, R
q_acc
...
0
1
...

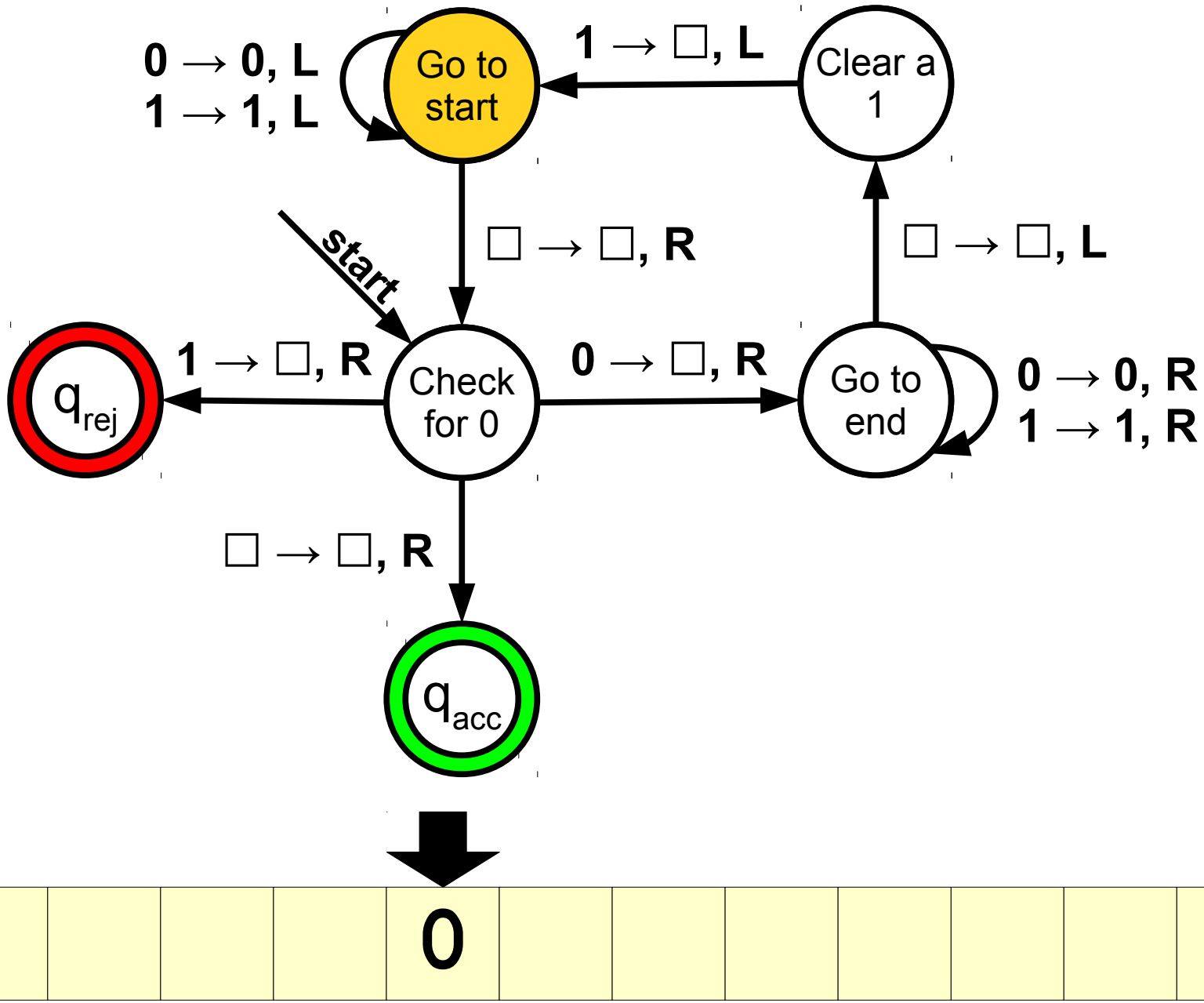
0 → 0, L
1 → 1, L
Go to start
1 → □, L
Clear a 1
start
□ → □, R
□ → □, L
1 → □, R
Check for 0
0 → □, R
Go to end
0 → 0, R
1 → 1, R
q_rej
□ → □, R
q_acc
...
0
...

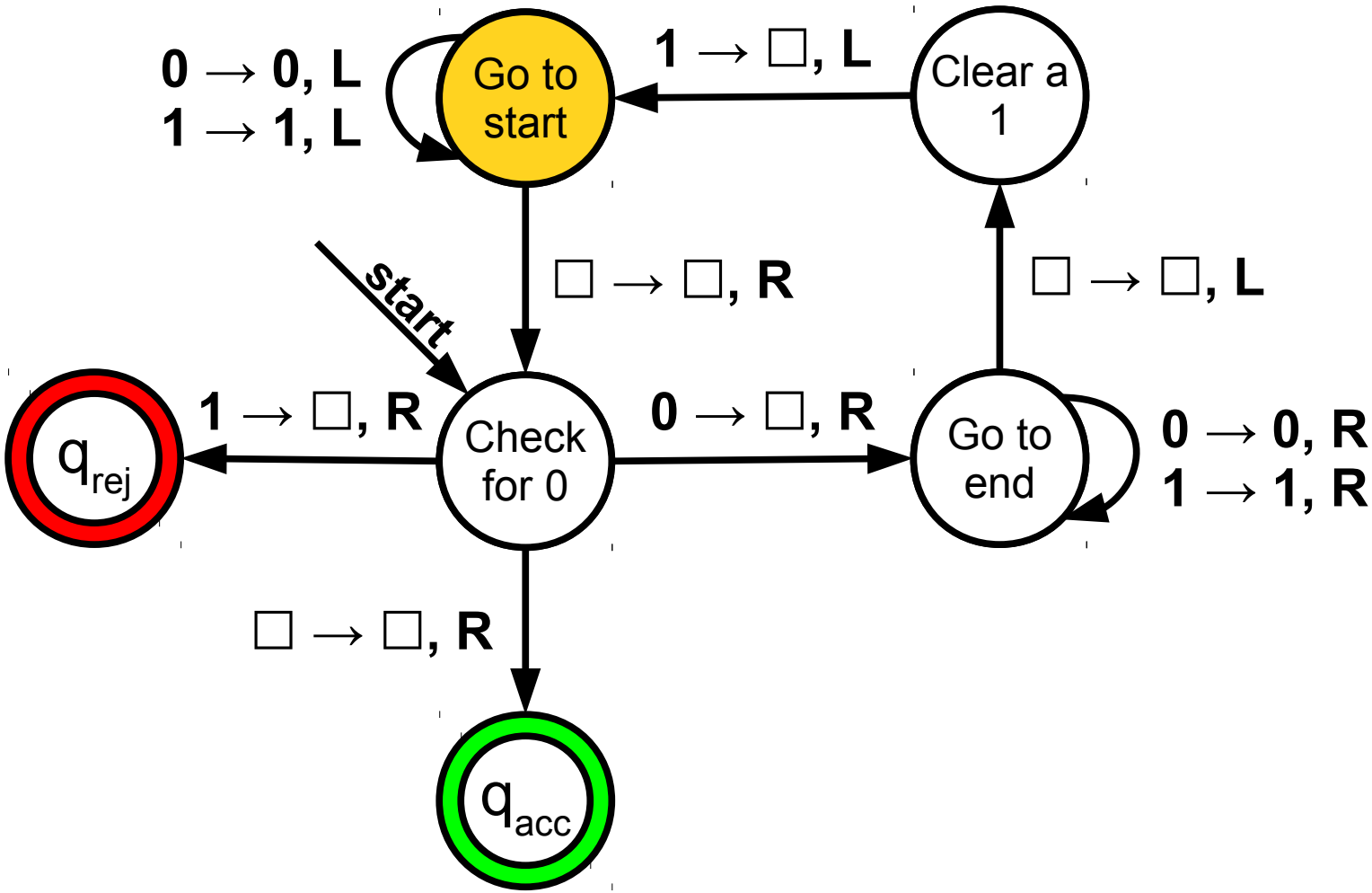
0 → 0, L
1 → 1, L
Go to start
1 → □, L
Clear a 1
start
□ → □, R
□ → □, L
1 → □, R
Check for 0
0 → □, R
Go to end
0 → 0, R
1 → 1, R
q_rej
□ → □, R
q_acc

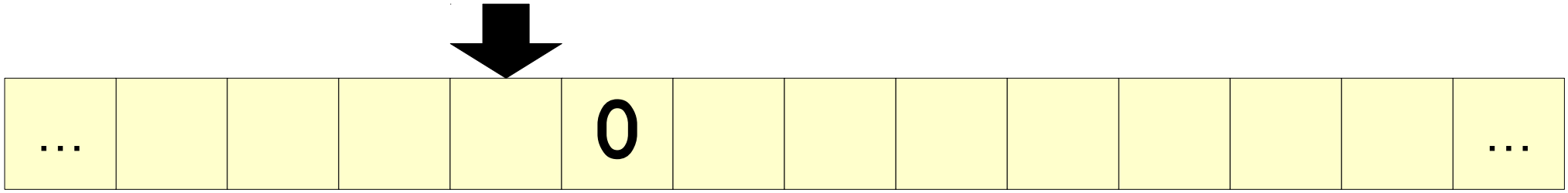
...
0
...

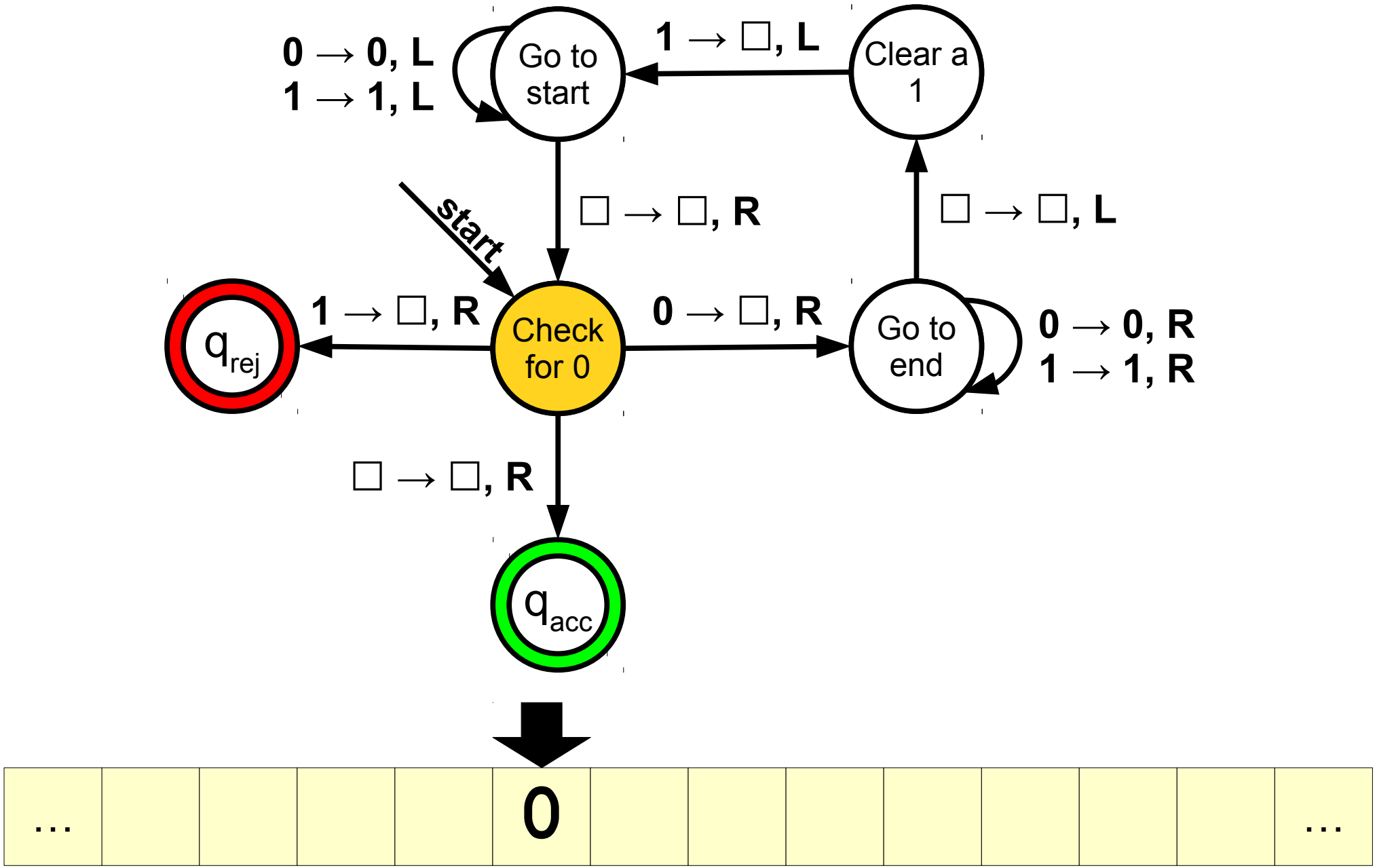
0 → 0, L
1 → 1, L
Go to start
1 → □, L
Clear a 1
start
□ → □, R
□ → □, L
1 → □, R
Check for 0
0 → □, R
Go to end
0 → 0, R
1 → 1, R
q_rej
□ → □, R
q_acc
...
0
...

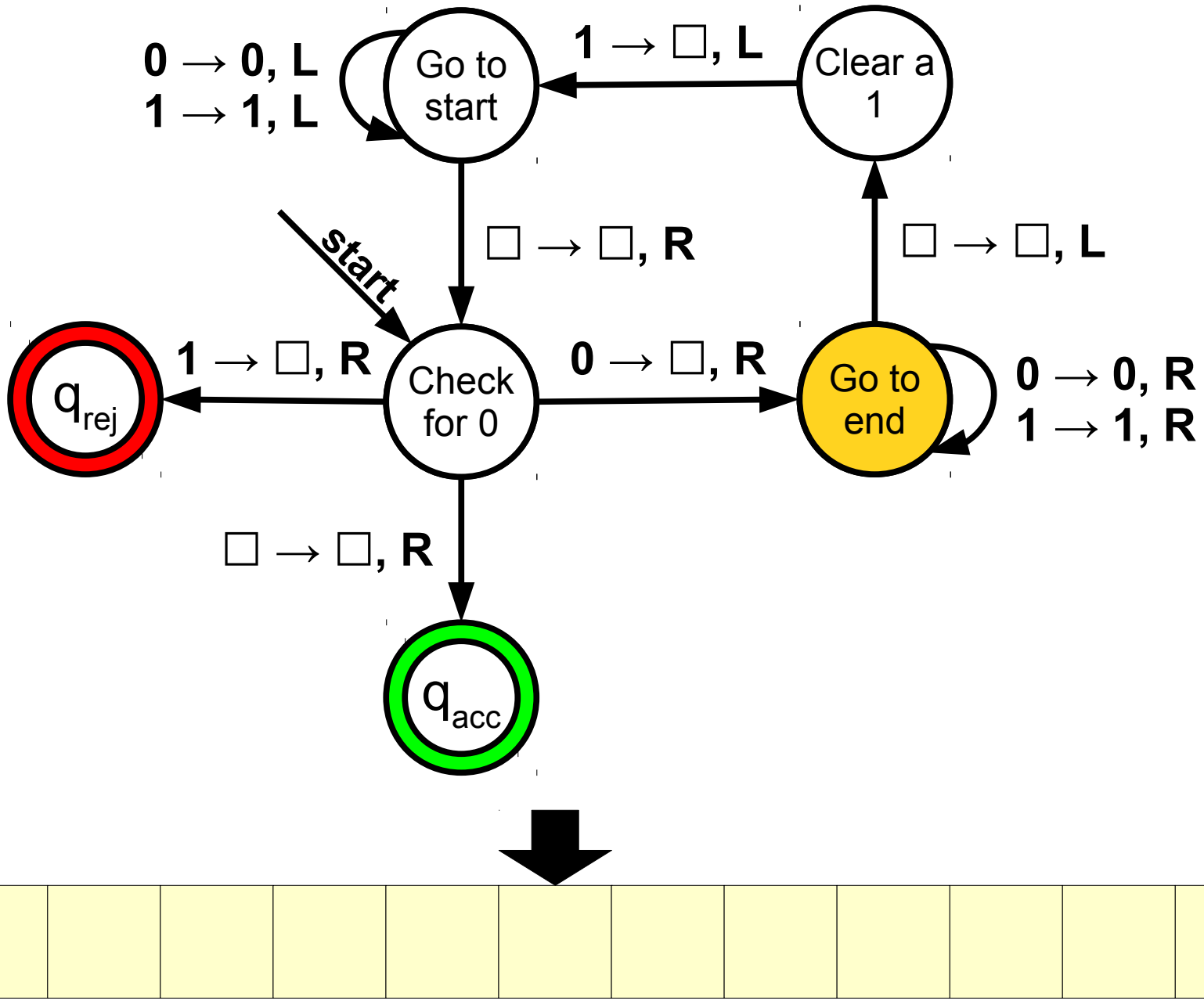
0 → 0, L
1 → 1, L
Go to start
1 → □, L
Clear a 1
start
□ → □, R
□ → □, L
1 → □, R
Check for 0
0 → □, R
Go to end
0 → 0, R
1 → 1, R
q_rej
□ → □, R
q_acc
...
...

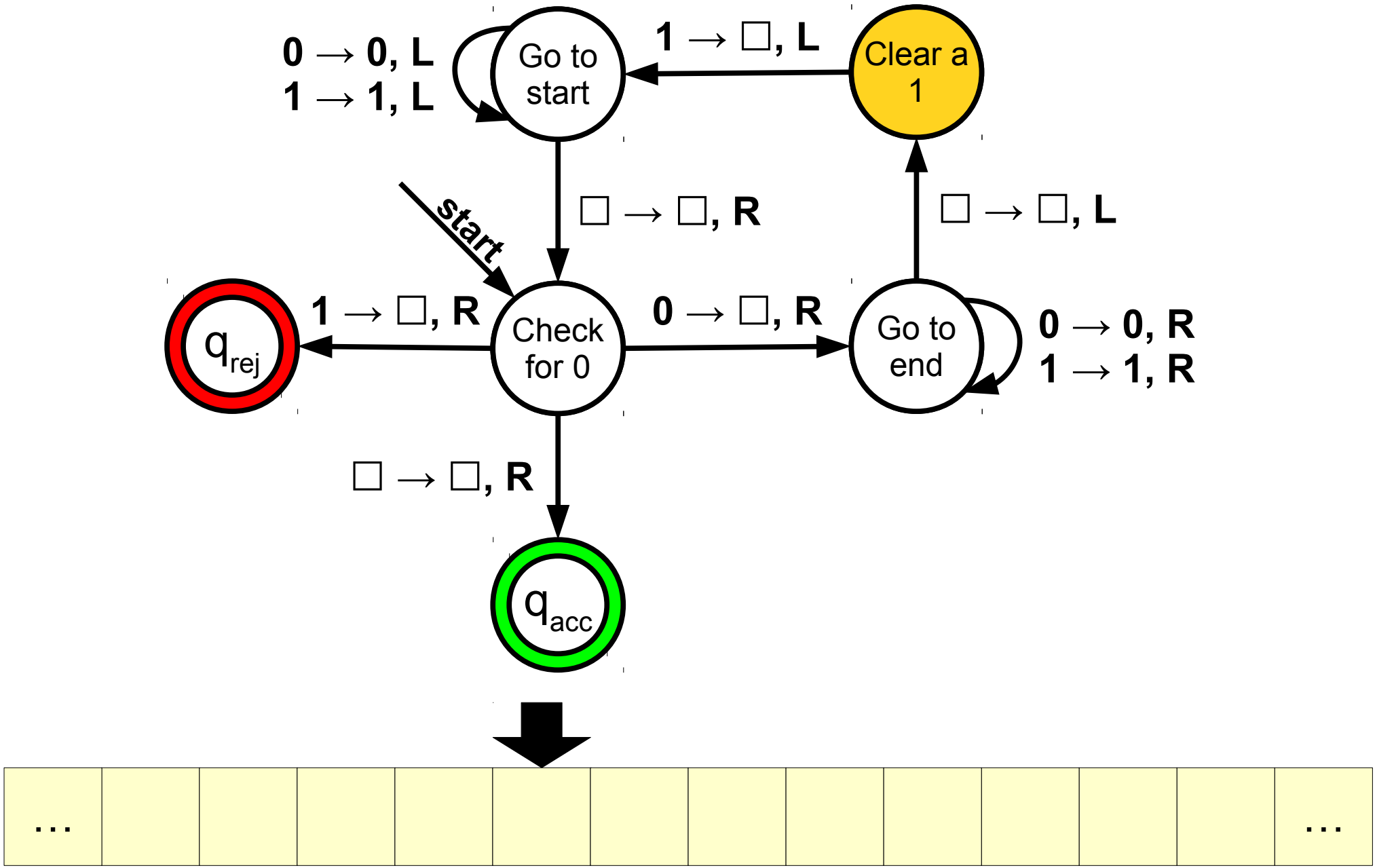
0 → 0, L
1 → 1, L
Go to start
1 → □, L
Clear a 1
start
□ → □, R
□ → □, L
1 → □, R
Check for 0
0 → □, R
Go to end
0 → 0, R
1 → 1, R
q_rej
□ → □, R
q_acc
...
...

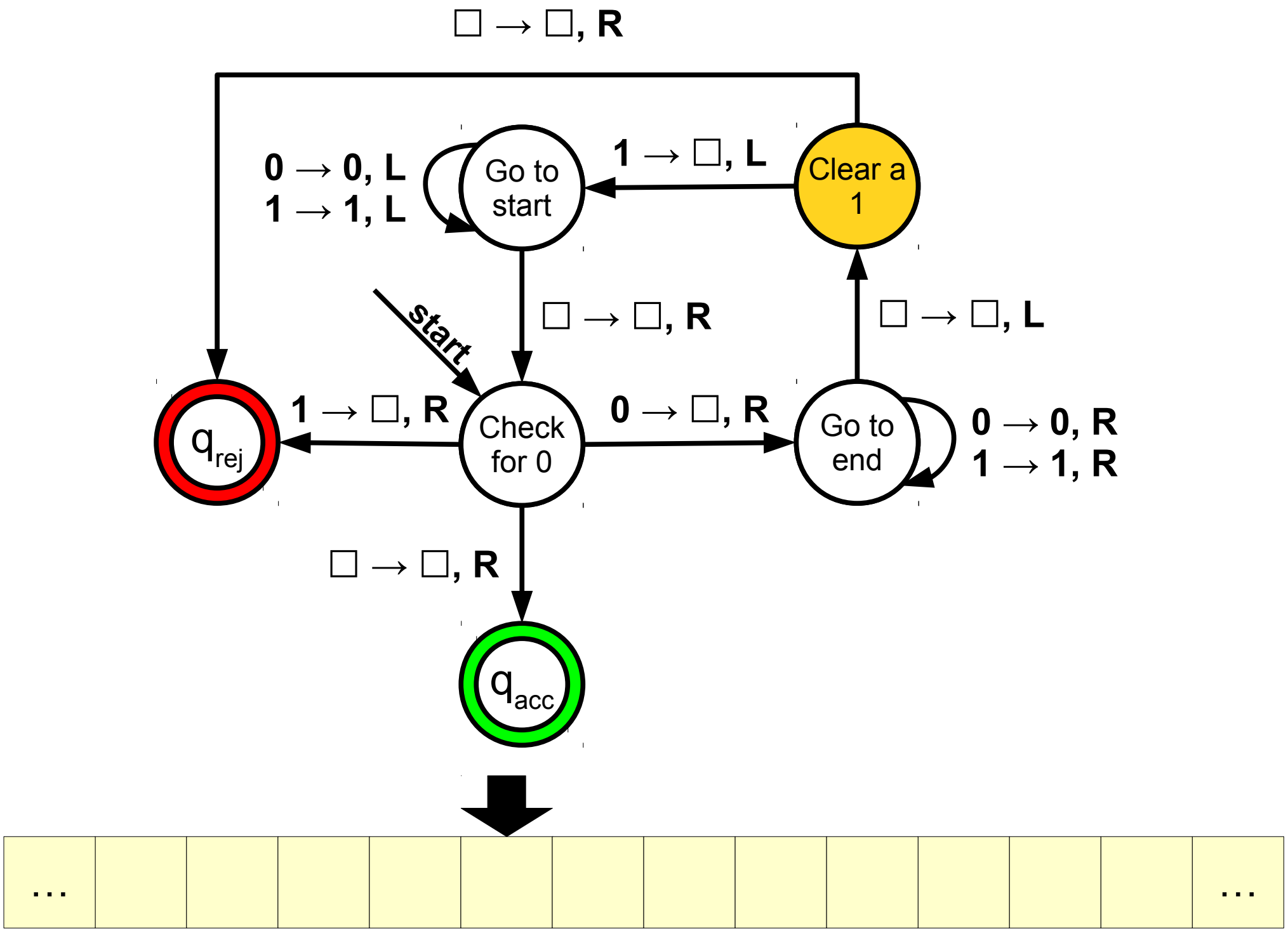
□ → □, R
0 → 0, L
1 → 1, L
Go to start
1 → □, L
Clear a 1
start
□ → □, R
□ → □, L
1 → □, R
Check for 0
0 → □, R
Go to end
0 → 0, R
1 → 1, R
q_rej
□ → □, R
q_acc
…
…

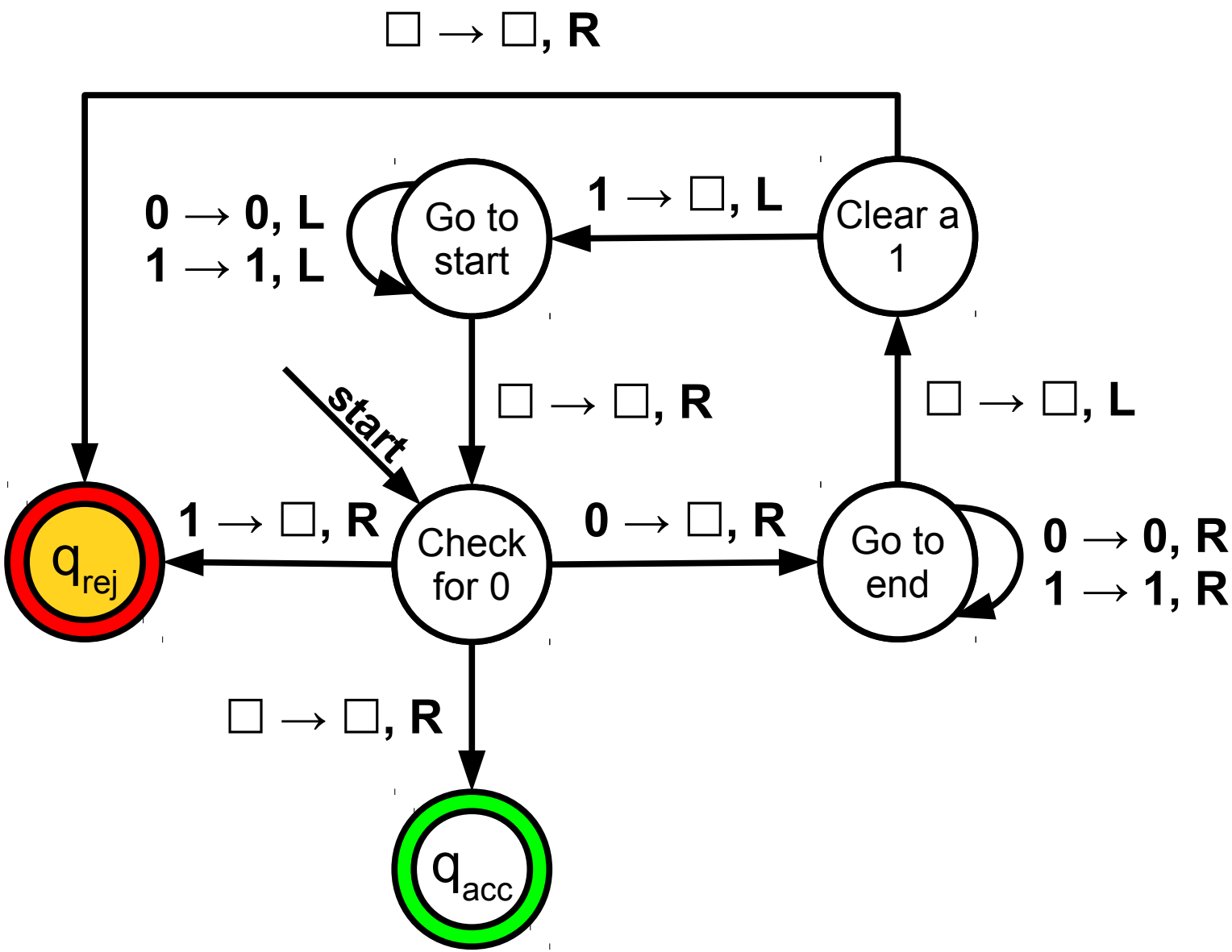
□ → □, R
0 → 0, L
1 → 1, L
Go to start
1 → □, L
Clear a 1
start
□ → □, R
□ → □, L
1 → □, R
Check for 0
0 → □, R
Go to end
0 → 0, R
1 → 1, R
q_rej
□ → □, R
q_acc

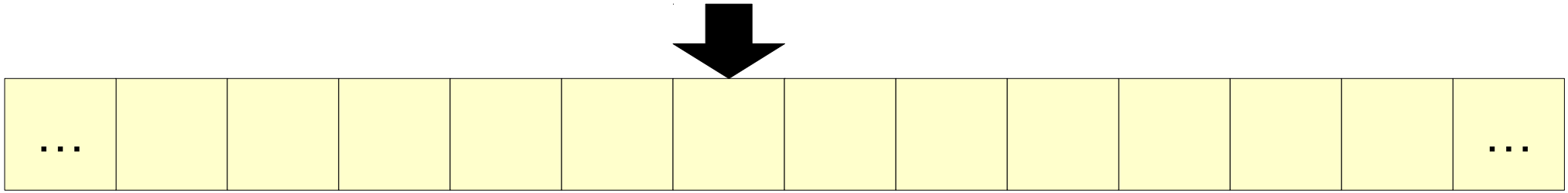
...
...

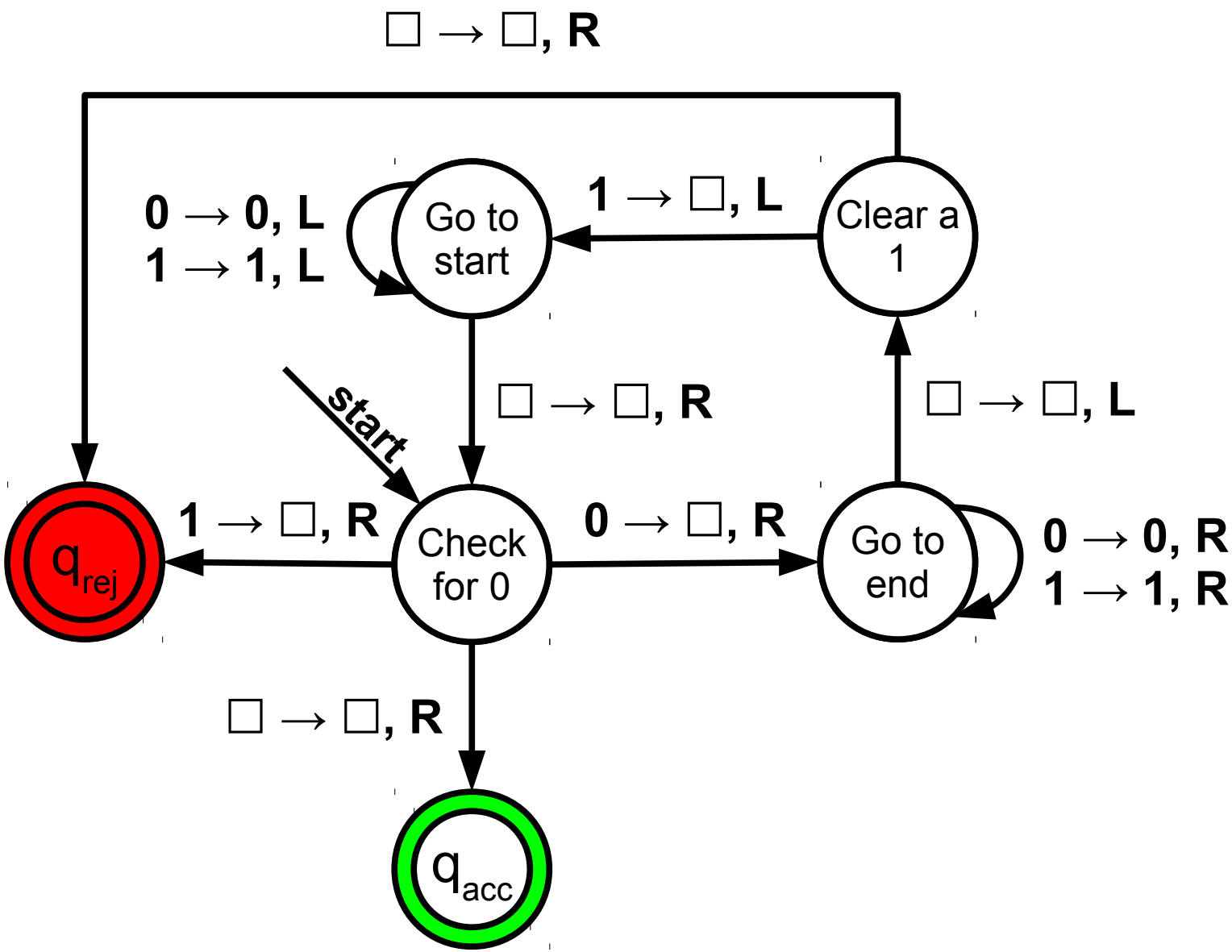
□ → □, R
0 → 0, L
1 → 1, L
Go to start
1 → □, L
Clear a 1
start
□ → □, R
□ → □, L
1 → □, R
Check for 0
0 → □, R
Go to end
0 → 0, R
1 → 1, R
q_{rej}
□ → □, R
q_{acc}

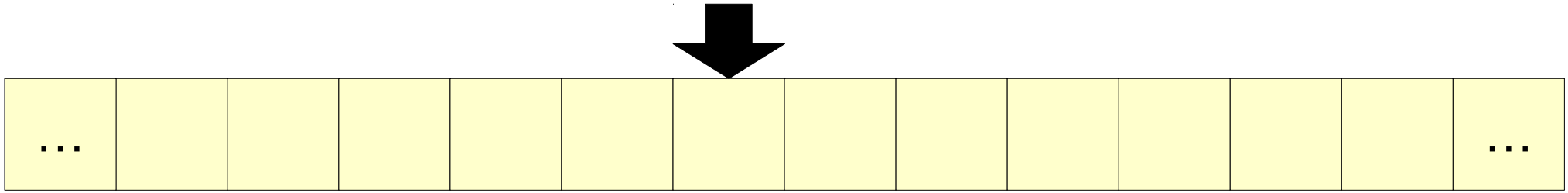
...
...

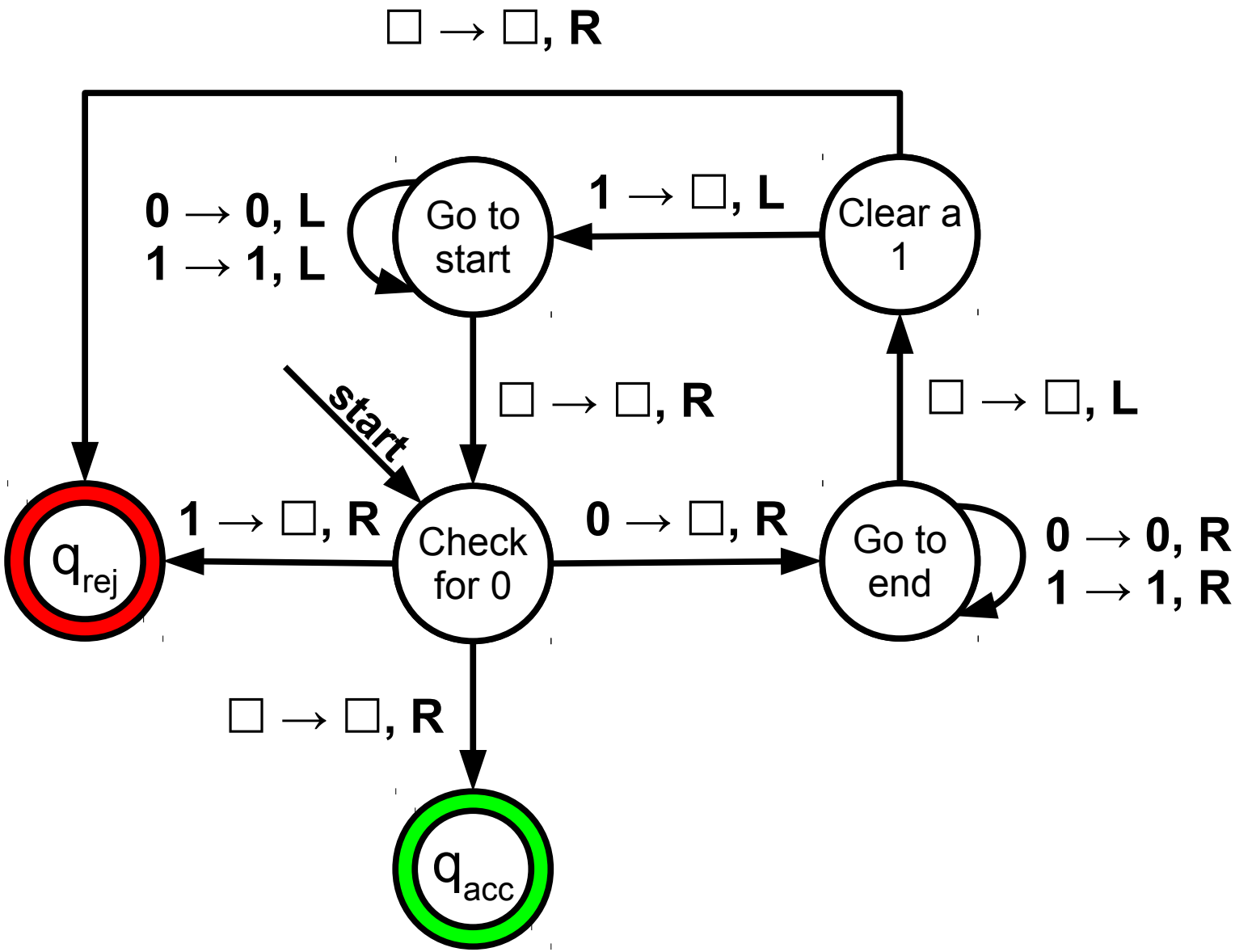
□ → □, R
0 → 0, L
1 → 1, L
Go to start
1 → □, L
Clear a 1
start
□ → □, R
□ → □, L
1 → □, R
Check for 0
0 → □, R
Go to end
0 → 0, R
1 → 1, R
q_rej
□ → □, R
q_acc

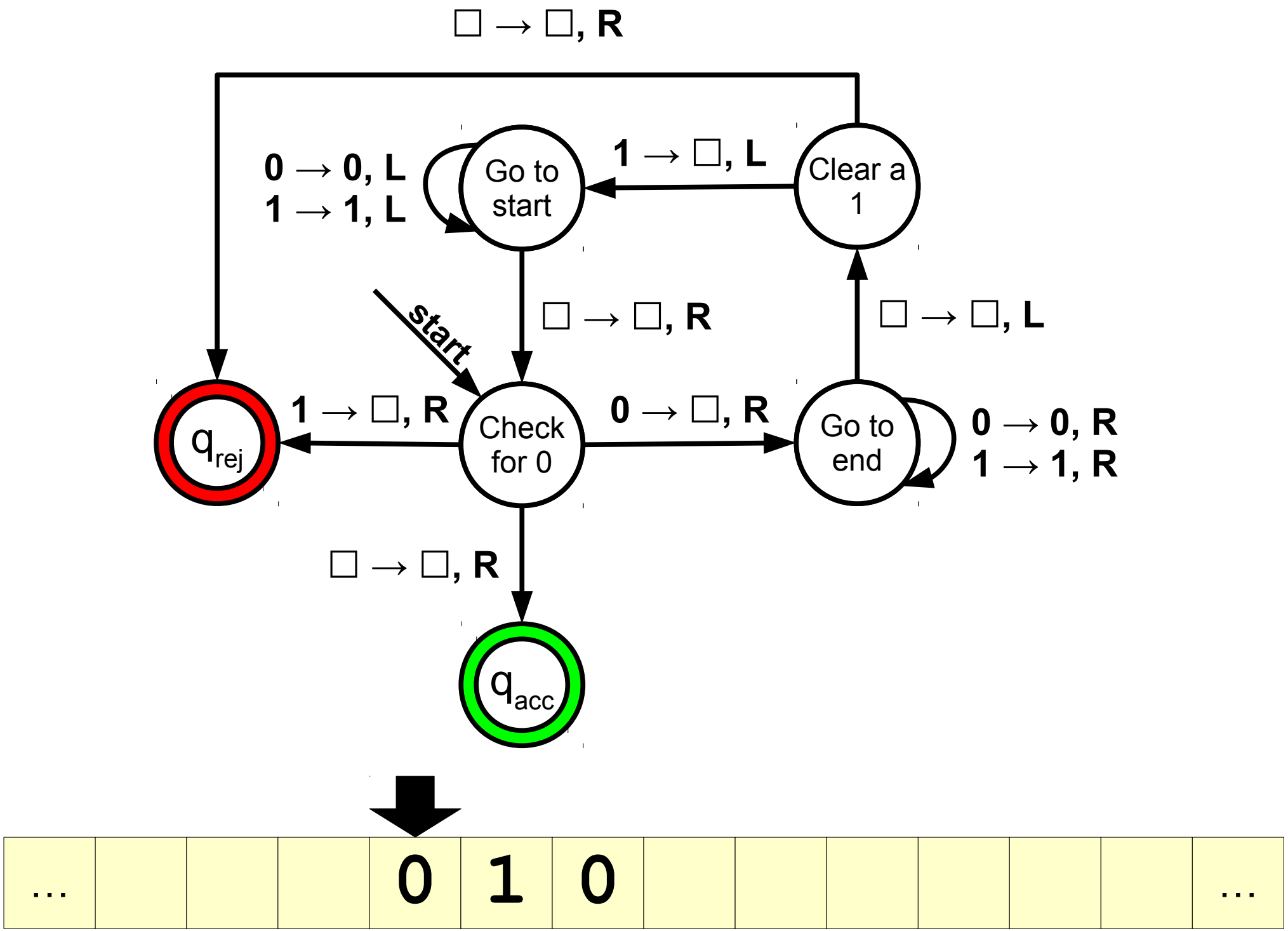
□ → □, R
0 → 0, L
1 → 1, L
Go to start
1 → □, L
Clear a 1
start
□ → □, R
□ → □, L
1 → □, R
Check for 0
0 → □, R
Go to end
0 → 0, R
1 → 1, R
q_rej
□ → □, R
q_acc
...
0
1
0
...

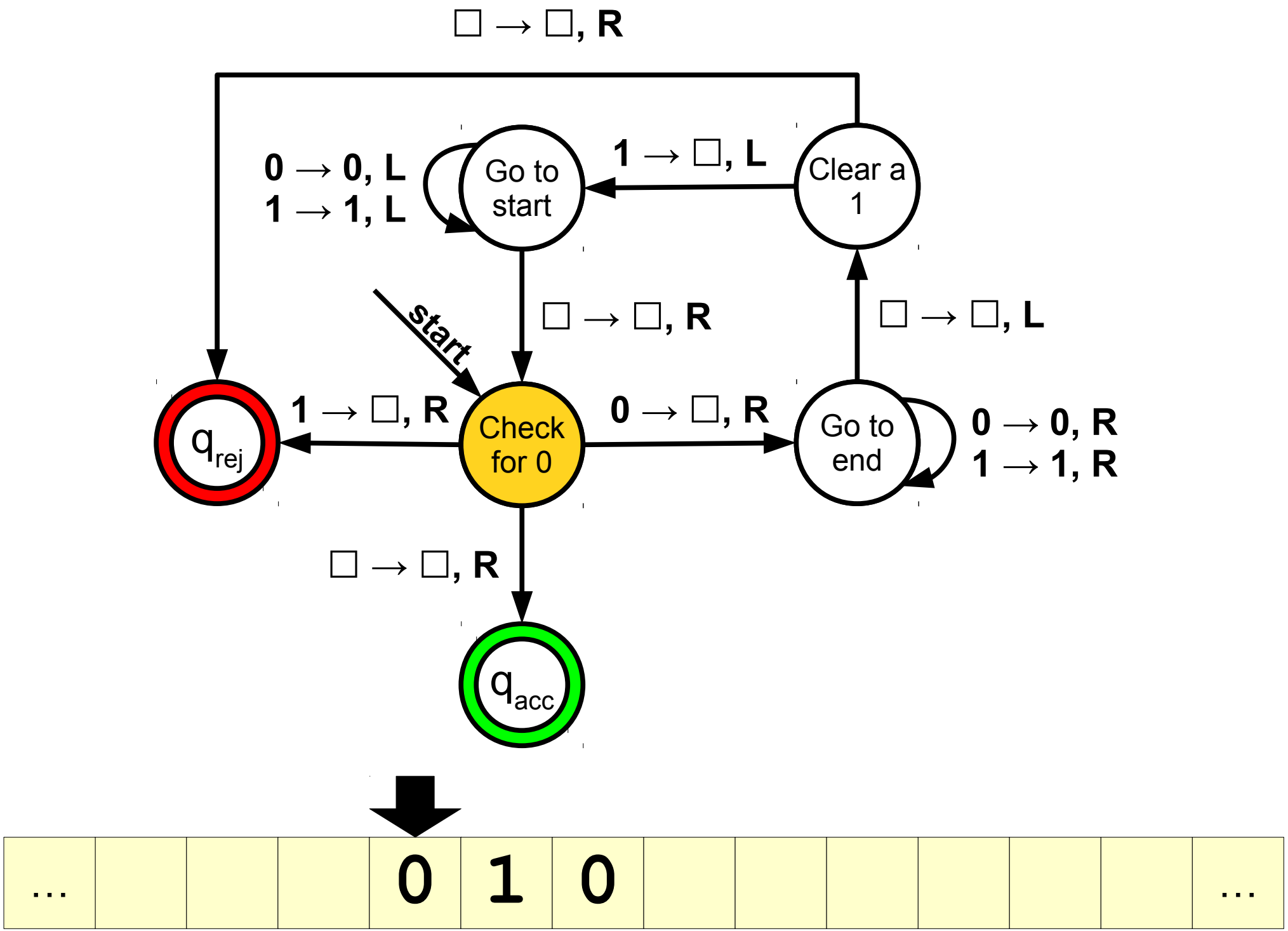
□ → □, R
0 → 0, L
1 → 1, L
Go to start
1 → □, L
Clear a 1
start
□ → □, R
□ → □, L
1 → □, R
Check for 0
0 → □, R
Go to end
0 → 0, R
1 → 1, R
q_rej
□ → □, R
q_acc
...
0
1
0
...

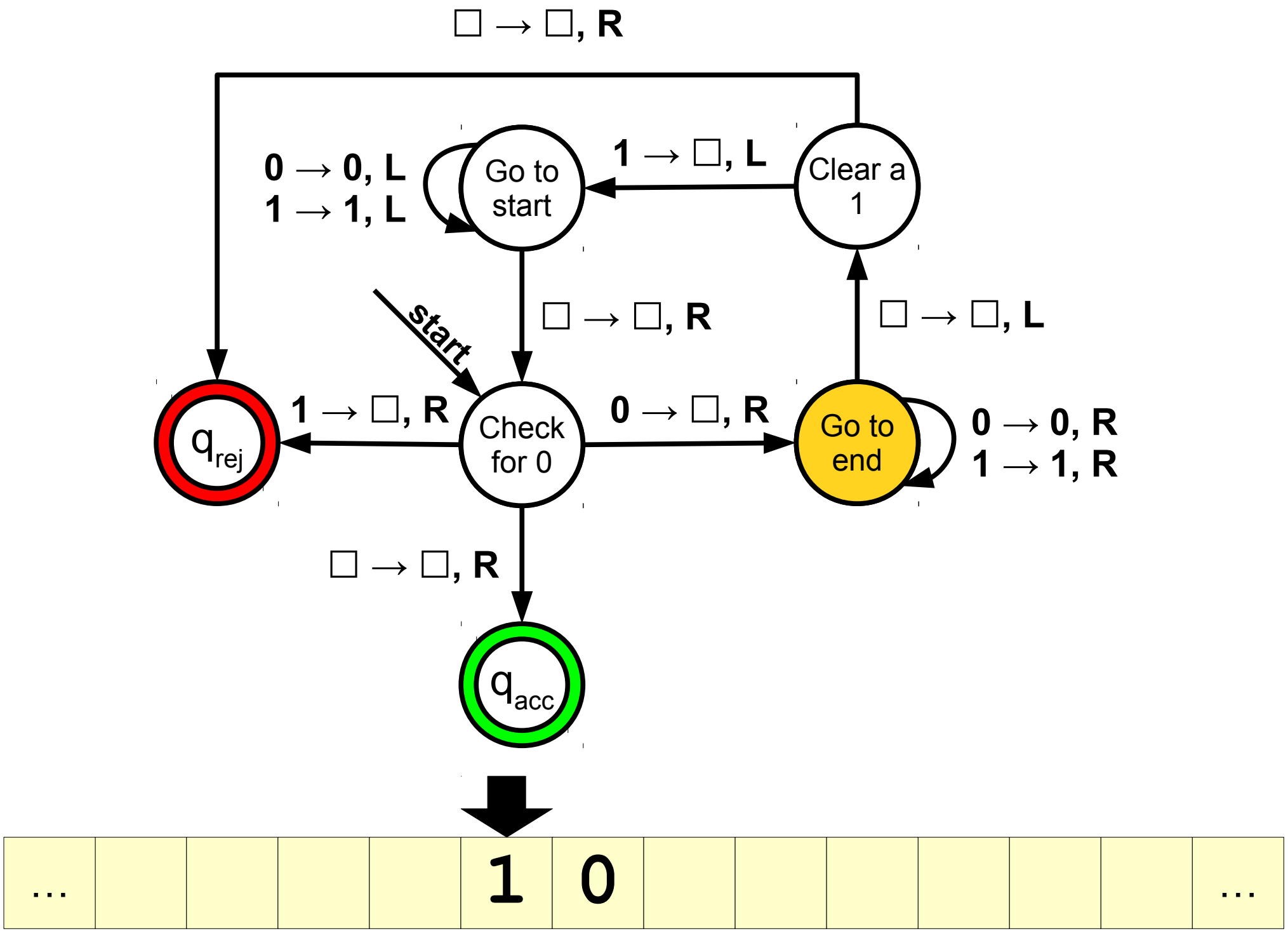
□ → □, R
0 → 0, L
1 → 1, L
Go to start
1 → □, L
Clear a 1
start
□ → □, R
□ → □, L
1 → □, R
Check for 0
0 → □, R
Go to end
0 → 0, R
1 → 1, R
q_rej
□ → □, R
q_acc
...
1
0
...

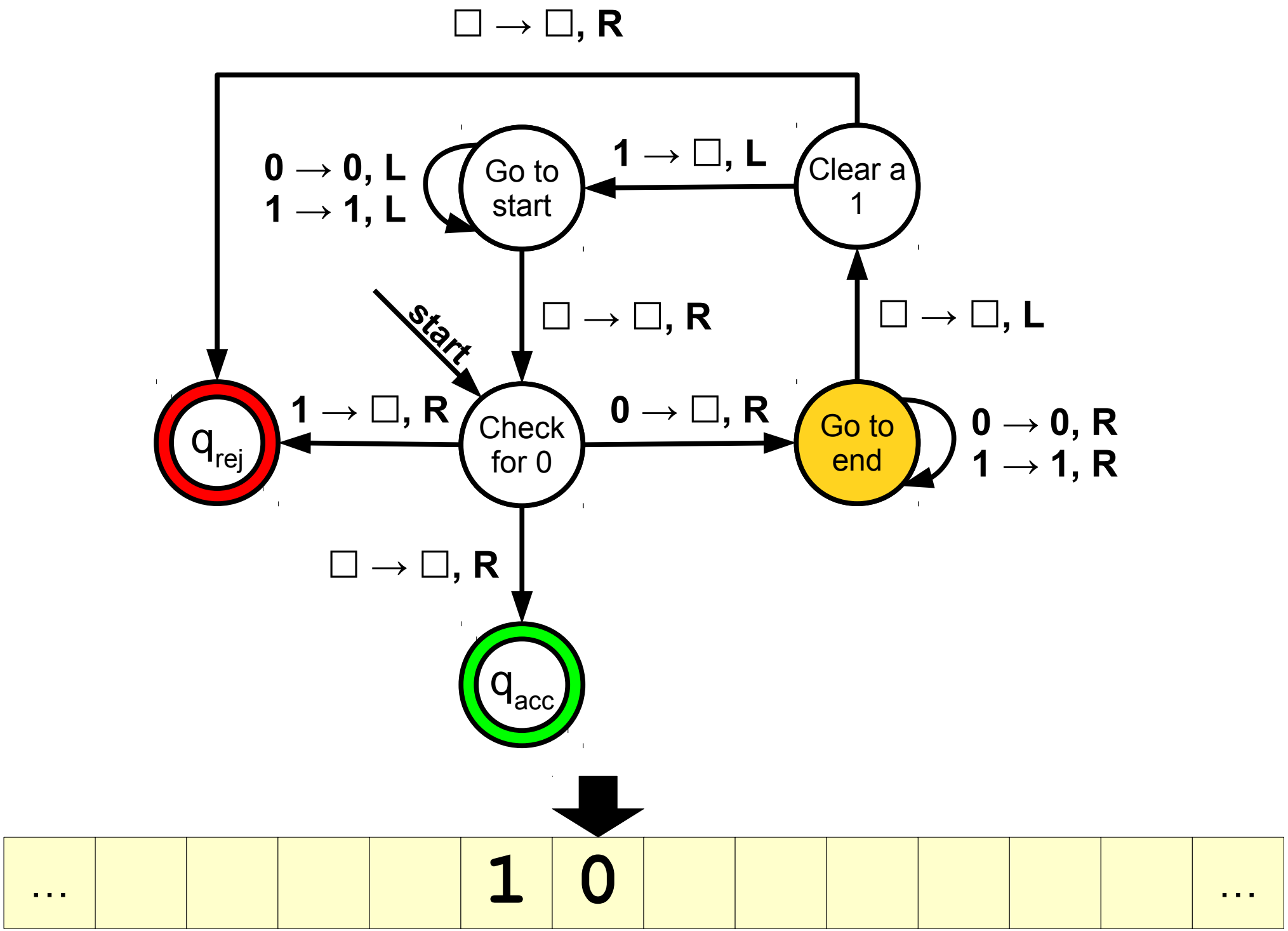
□ → □, R
0 → 0, L
1 → 1, L
Go to start
1 → □, L
Clear a 1
start
□ → □, R
□ → □, L
1 → □, R
Check for 0
0 → □, R
Go to end
0 → 0, R
1 → 1, R
q_rej
□ → □, R
q_acc
...
1
0
...

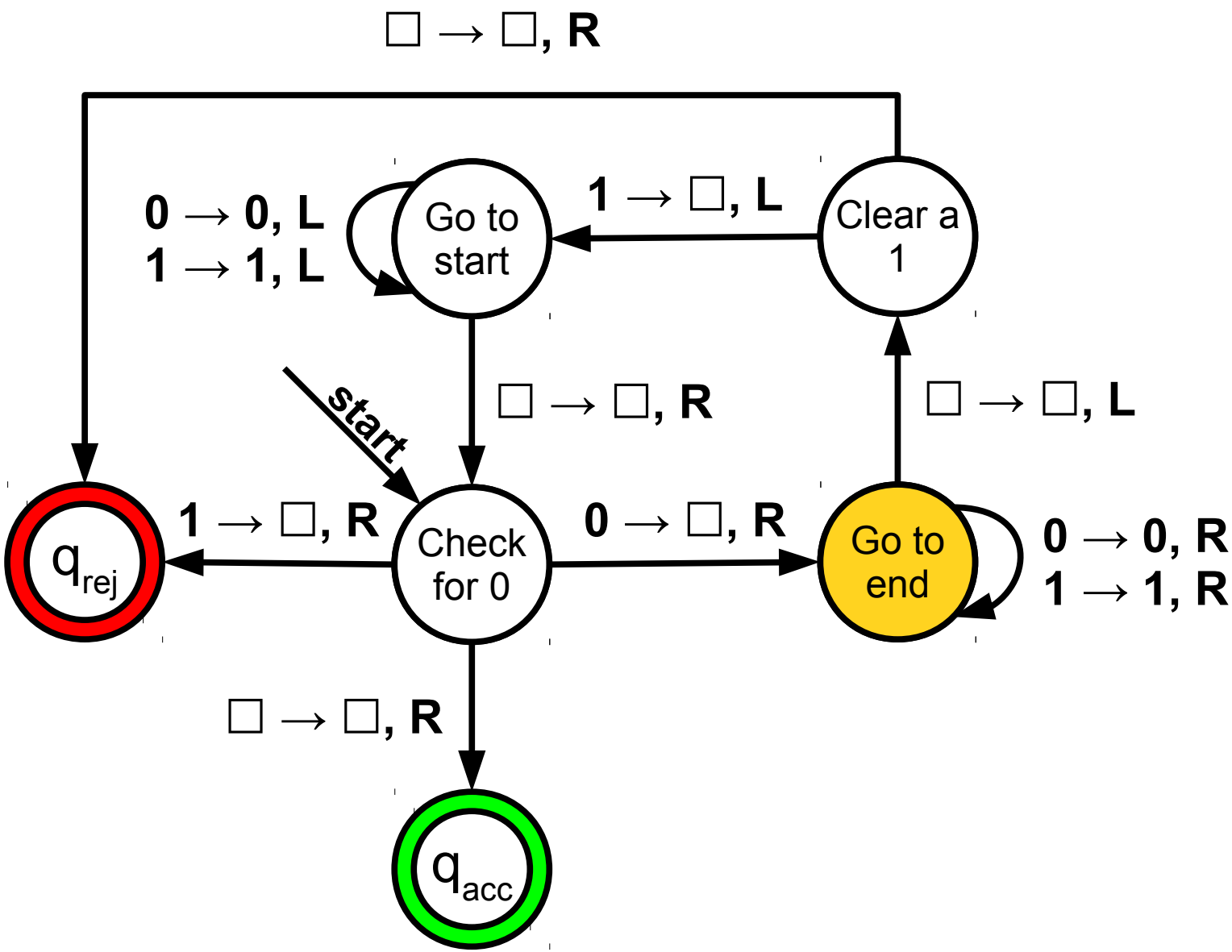
□ → □, R
0 → 0, L
1 → 1, L
Go to start
1 → □, L
Clear a 1
start
□ → □, R
□ → □, L
1 → □, R
Check for 0
0 → □, R
Go to end
0 → 0, R
1 → 1, R
q_rej
□ → □, R
q_acc

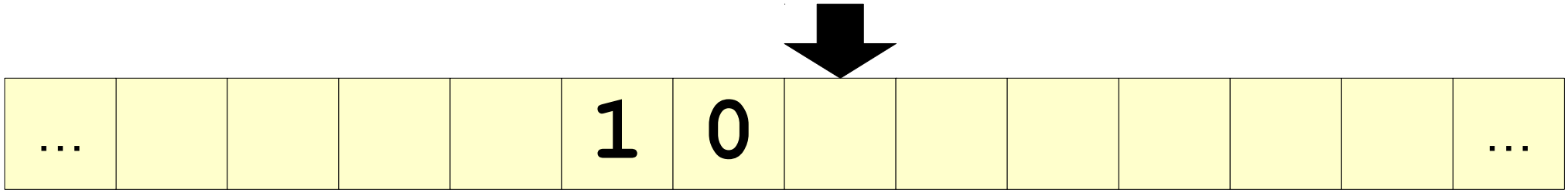
...
1
0
...

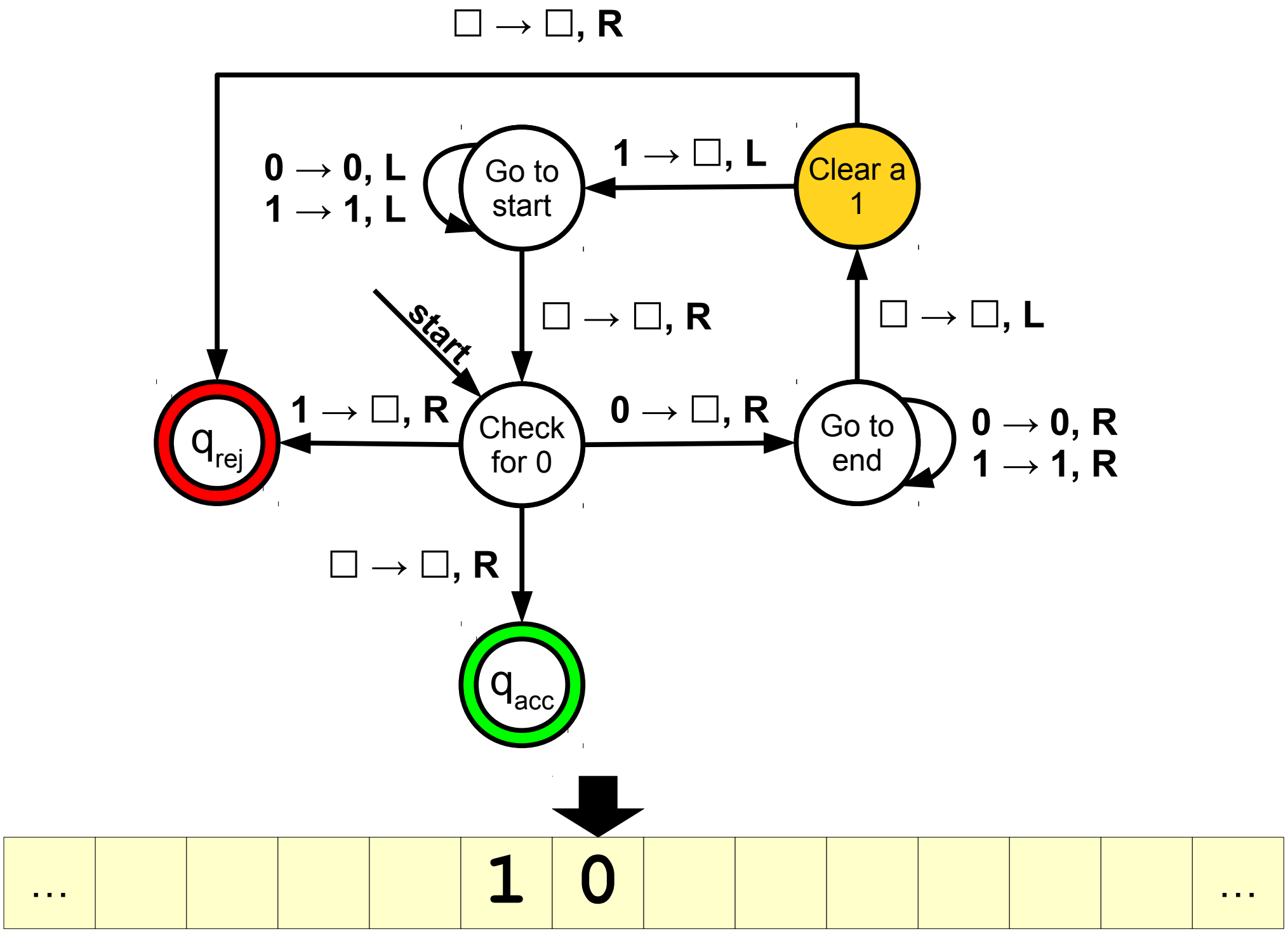
□ → □, R
0 → 0, L
1 → 1, L
Go to start
1 → □, L
Clear a 1
start
□ → □, R
□ → □, L
1 → □, R
Check for 0
0 → □, R
Go to end
0 → 0, R
1 → 1, R
q_rej
□ → □, R
q_acc
...
1
0
...

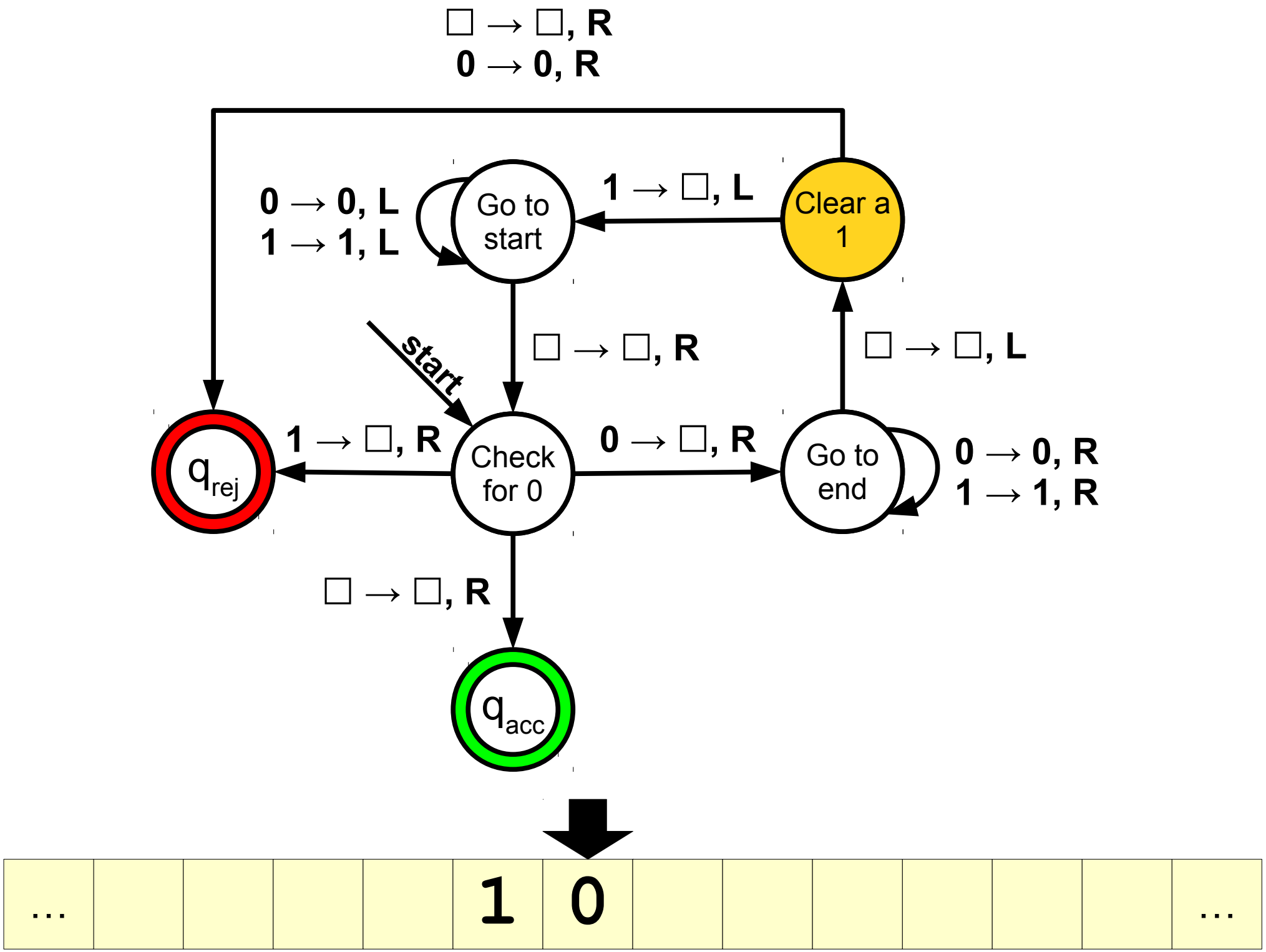
□ → □, R
0 → 0, R
0 → 0, L
1 → 1, L
Go to start
1 → □, L
Clear a 1
start
□ → □, R
□ → □, L
1 → □, R
Check for 0
0 → □, R
Go to end
0 → 0, R
1 → 1, R
q_rej
□ → □, R
q_acc
...
1
0
...

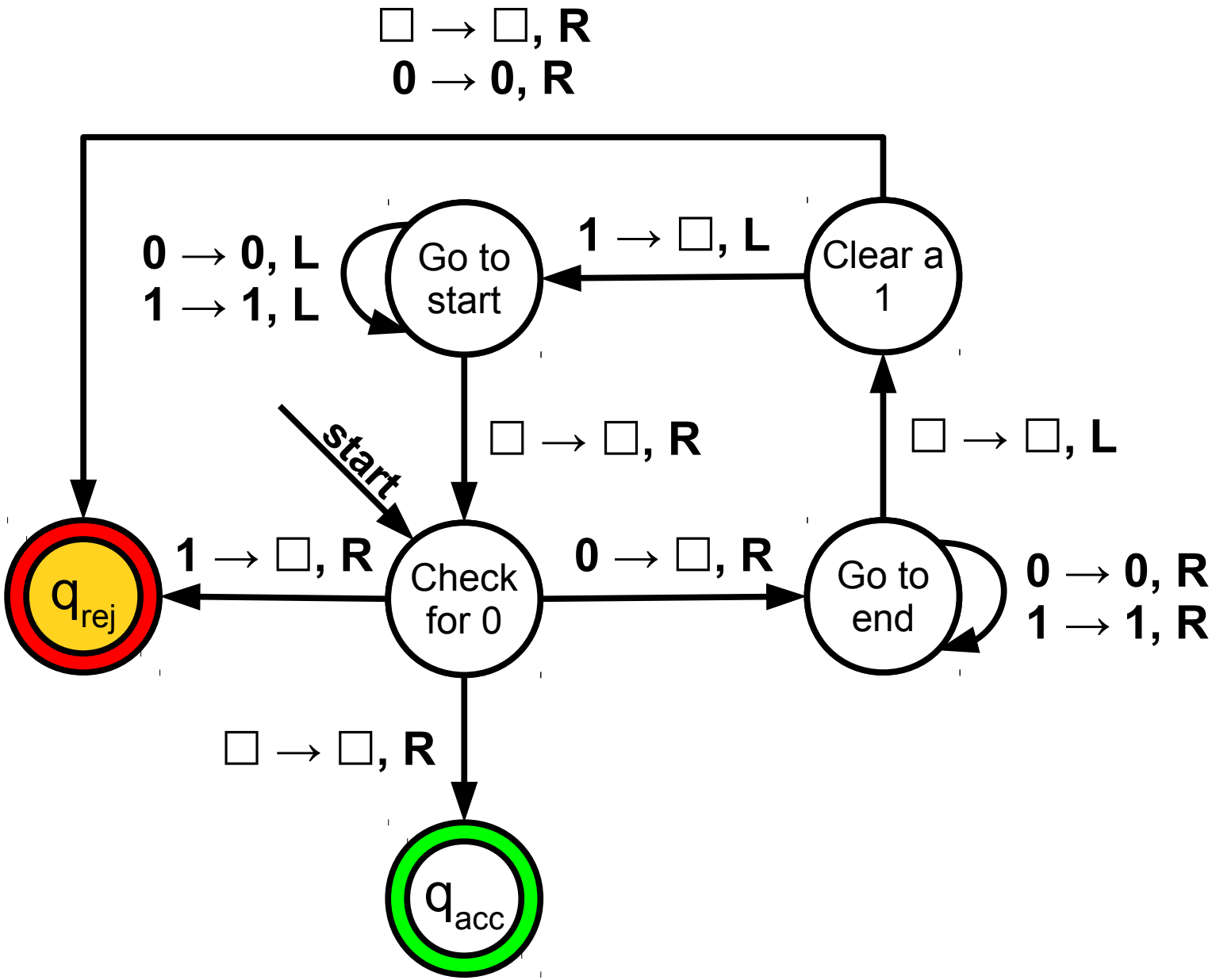
□ → □, R
0 → 0, R
0 → 0, L
1 → 1, L
Go to start
1 → □, L
Clear a 1
start
□ → □, R
□ → □, L
1 → □, R
Check for 0
0 → □, R
Go to end
0 → 0, R
1 → 1, R
q_rej
□ → □, R
q_acc

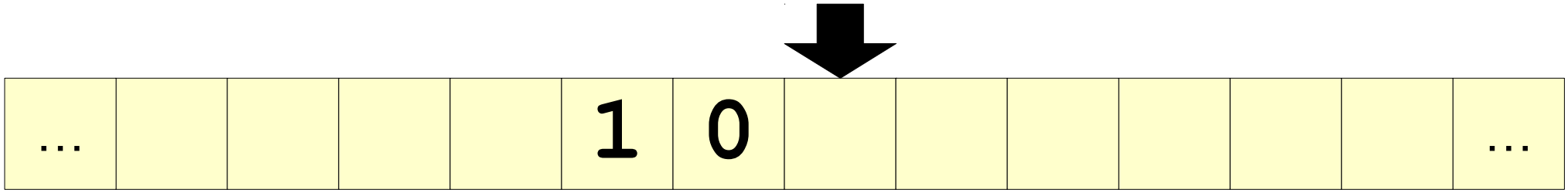
...
1
0
...

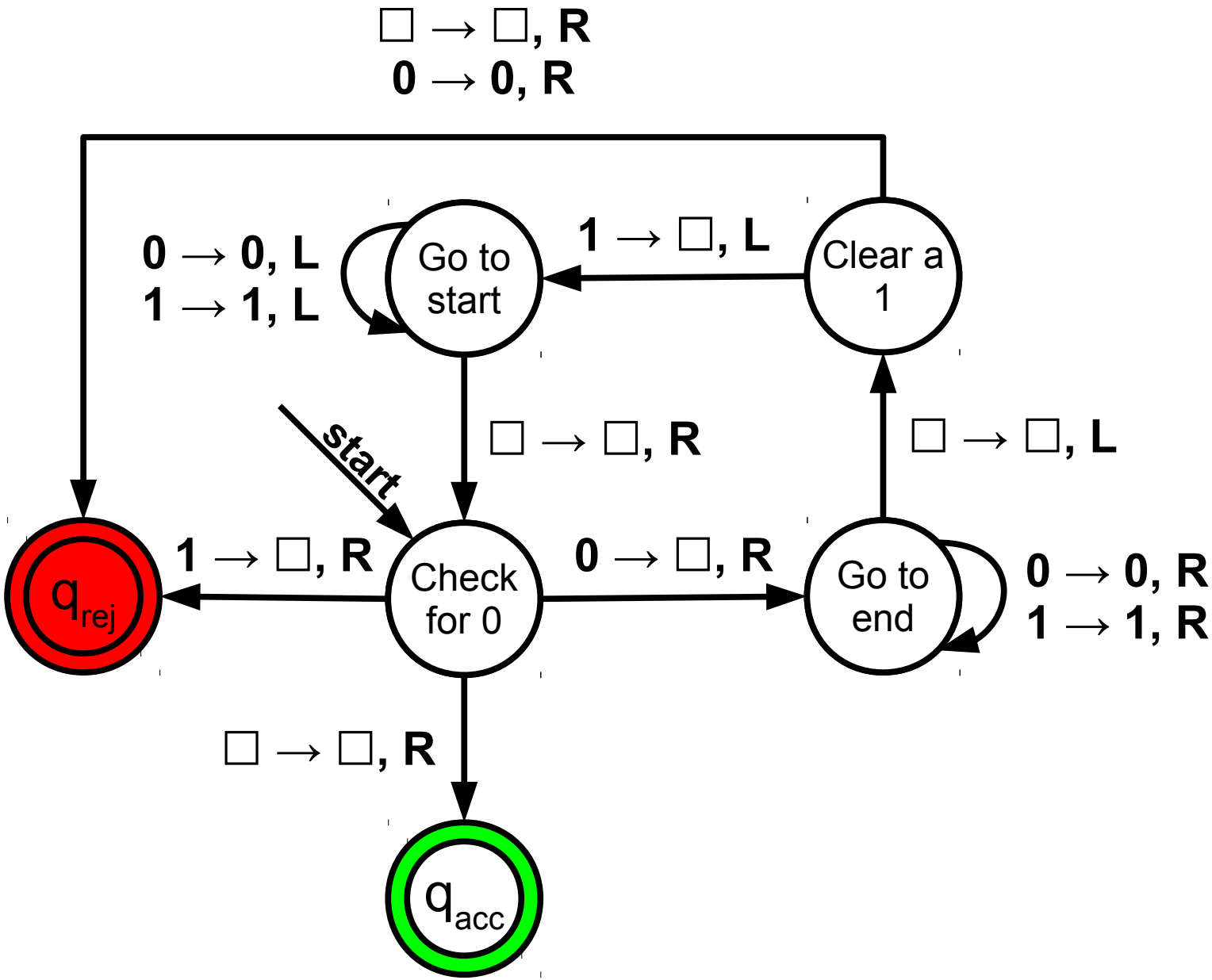
□ → □, R
0 → 0, R
0 → 0, L
1 → 1, L
Go to start
1 → □, L
Clear a 1
start
□ → □, R
□ → □, L
1 → □, R
Check for 0
0 → □, R
Go to end
0 → 0, R
1 → 1, R
□ → □, R
q_rej
q_acc

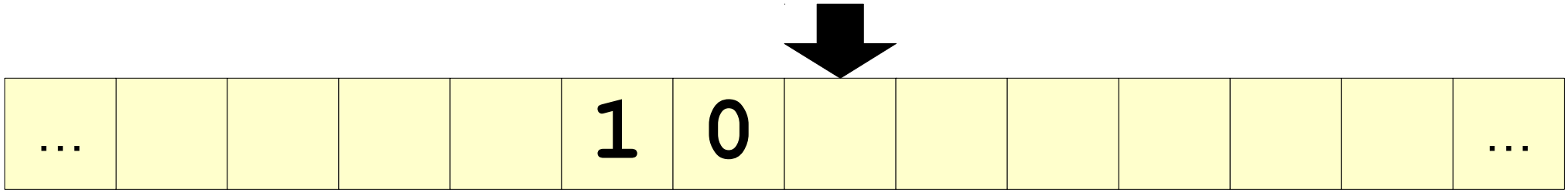
...
1
0
...

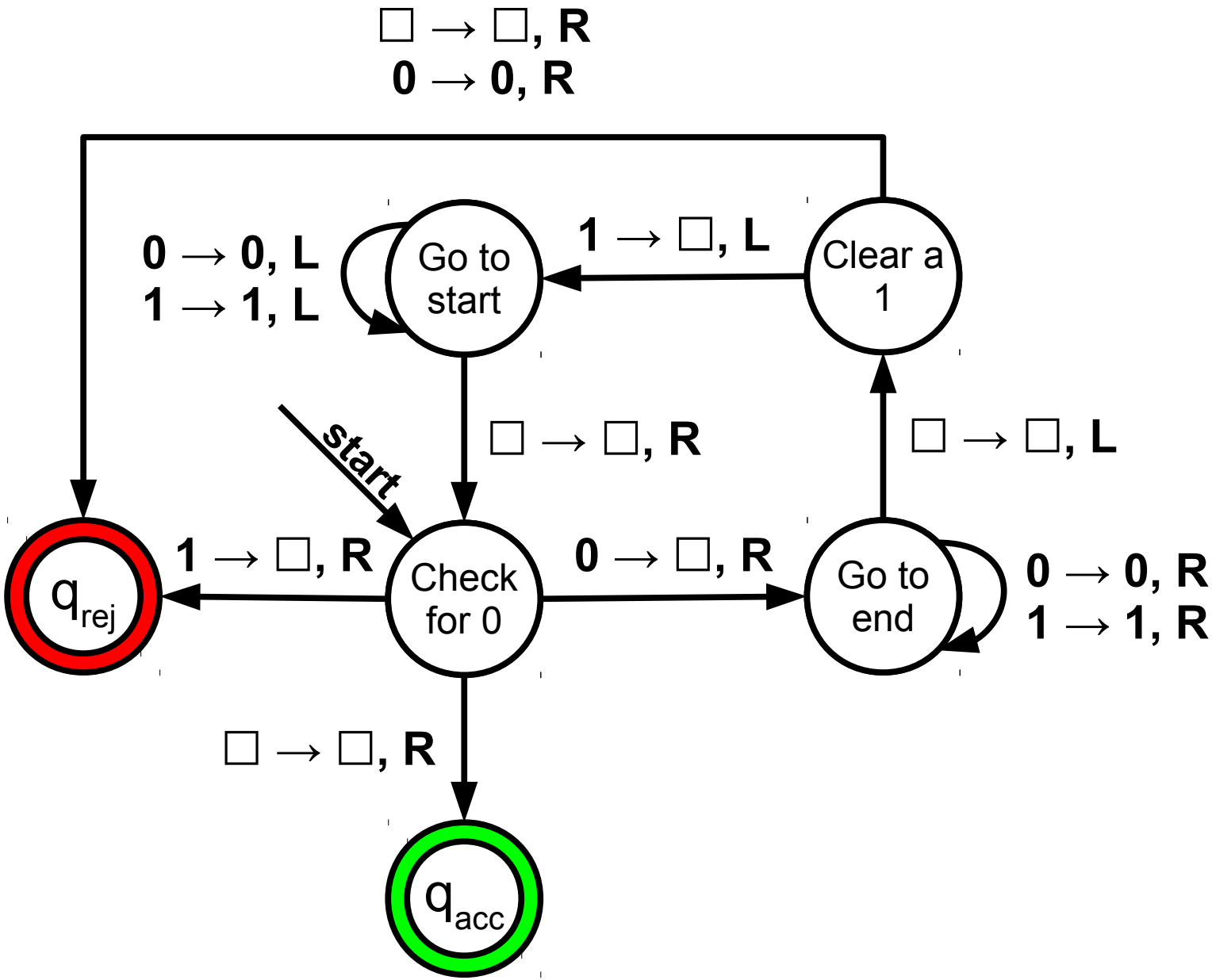
□ → □, R
0 → 0, R
0 → 0, L
1 → 1, L
Go to start
1 → □, L
Clear a 1
start
□ → □, R
□ → □, L
1 → □, R
Check for 0
0 → □, R
Go to end
0 → 0, R
1 → 1, R
q_rej
□ → □, R
q_acc

Another TM Design

- We've designed a TM for $\{\mathtt{0}^n\mathtt{1}^n \mid n \in \mathbb{N}\}$.
- Consider this language over $\Sigma = \{\mathtt{0}, \mathtt{1}\}$:

$$L = \{\ w \in \Sigma^* \mid w \text{ has the same number of } \mathtt{0}\text{s and } \mathtt{1}\text{s}\ \}$$

- This language is also not regular, but it is context-free.
- How might we design a TM for it?

A Caveat

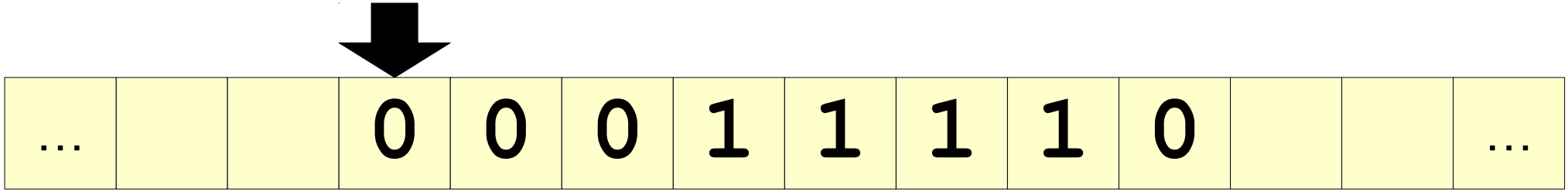

A Caveat

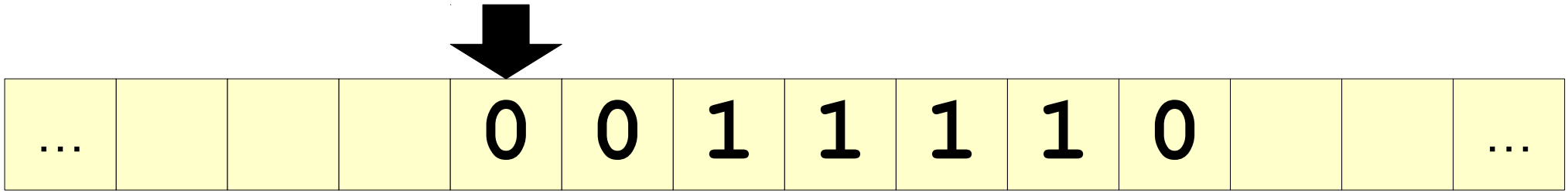

A Caveat

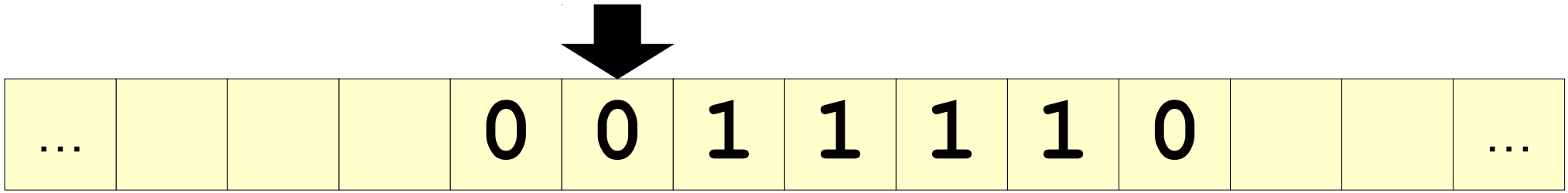

A Caveat

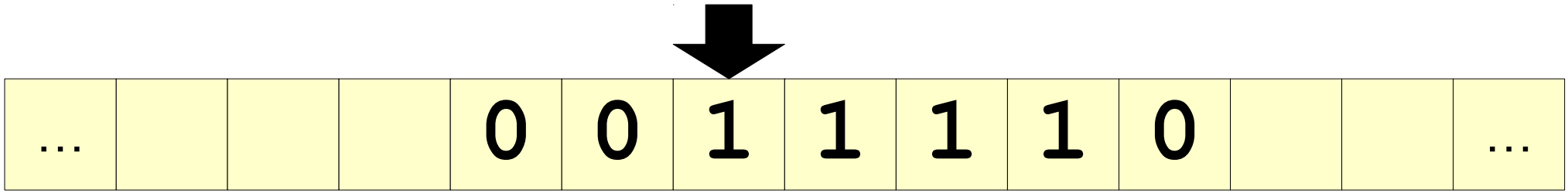

A Caveat

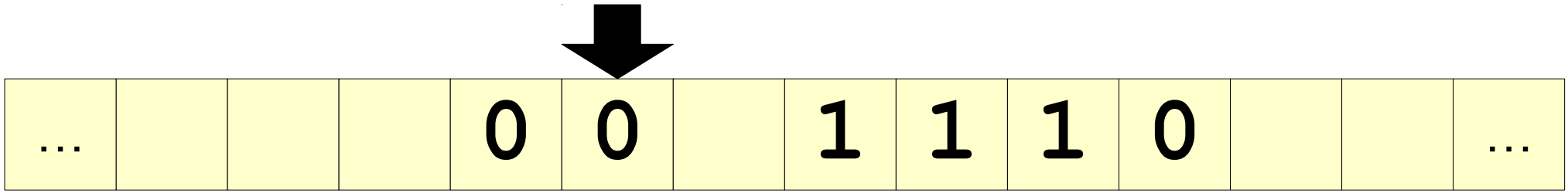

A Caveat

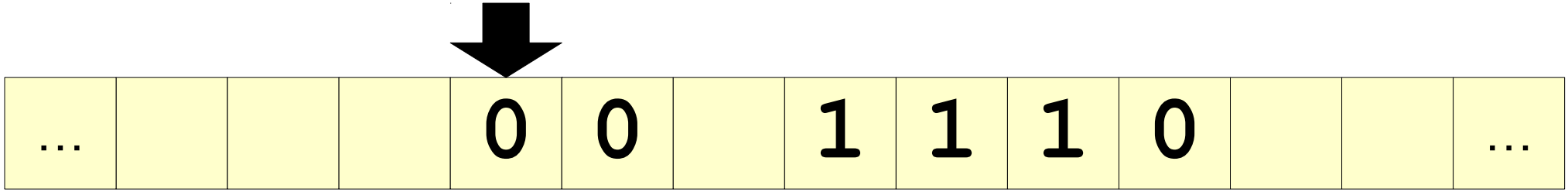

A Caveat

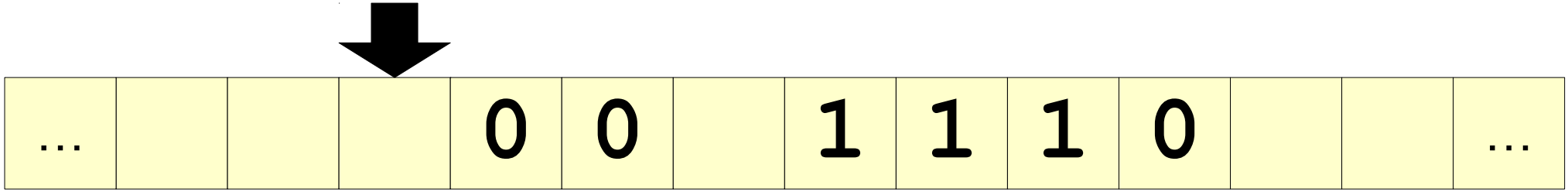

A Caveat

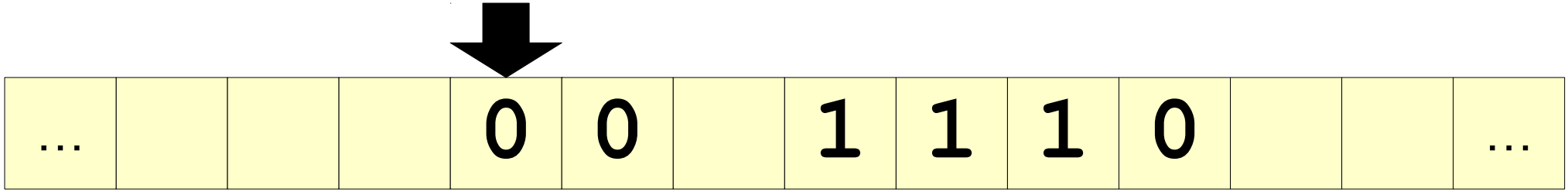

A Caveat

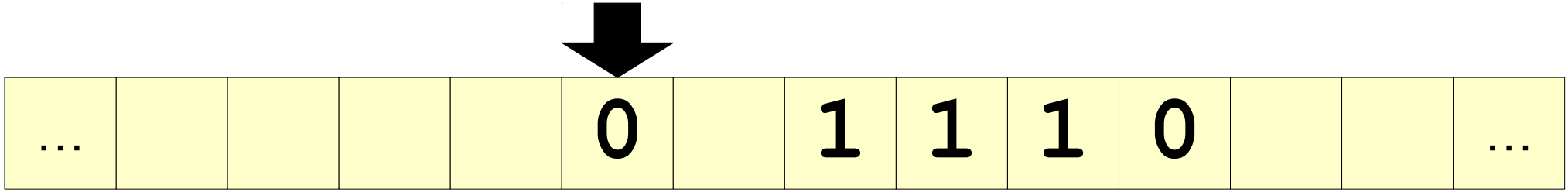

A Caveat

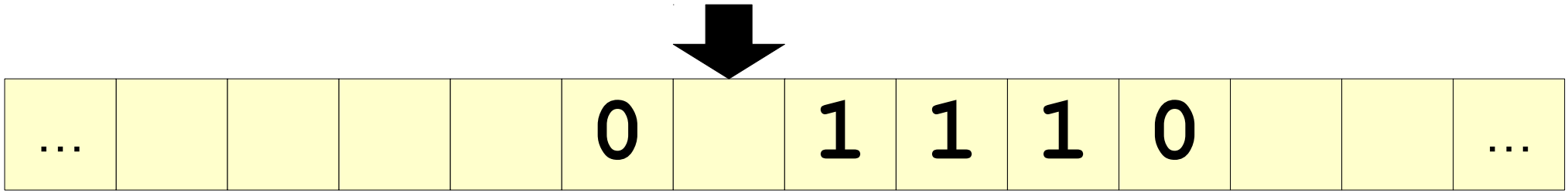

A Caveat

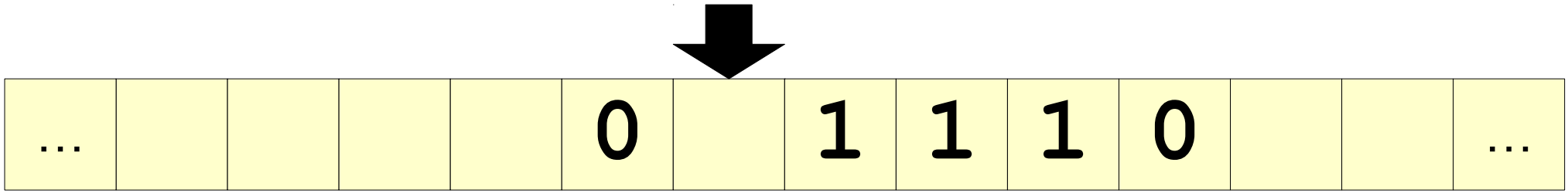

How do we know that this blank isn't one of the infinitely many blanks after our input string?

A Caveat

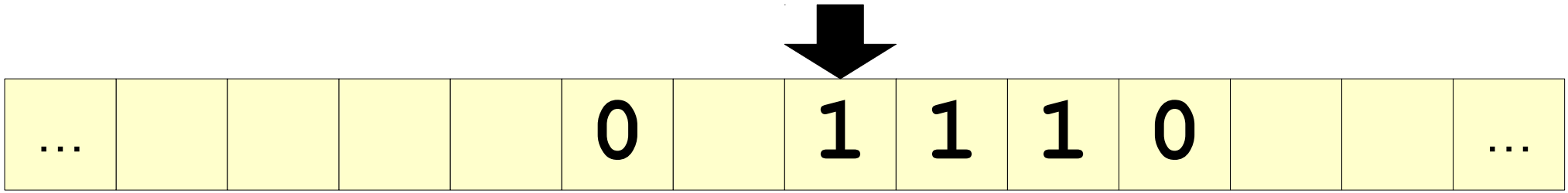

A Caveat

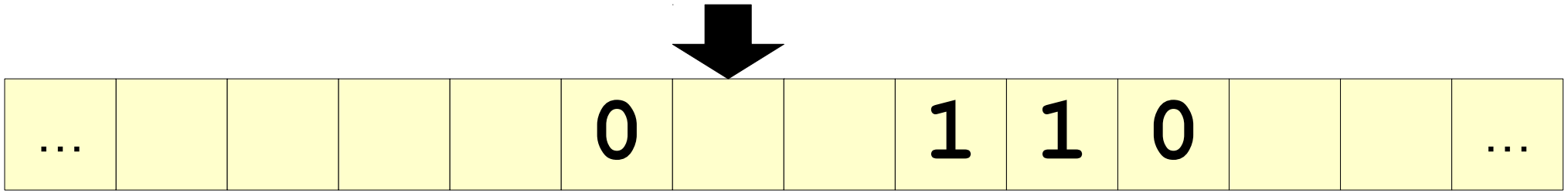

A Caveat

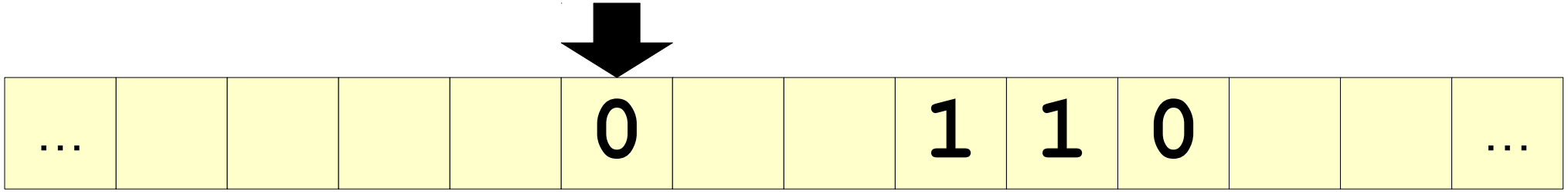

A Caveat

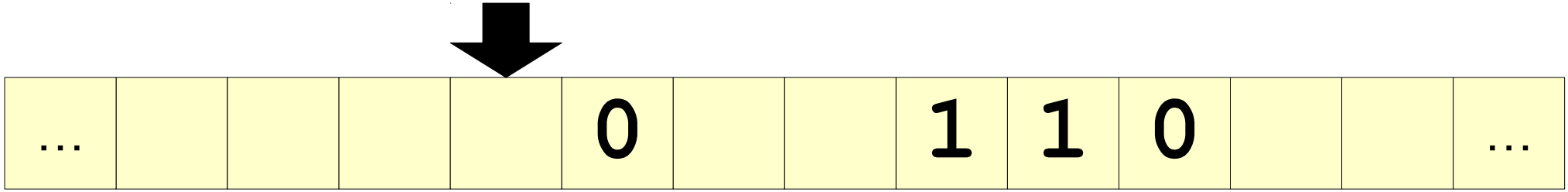

A Caveat

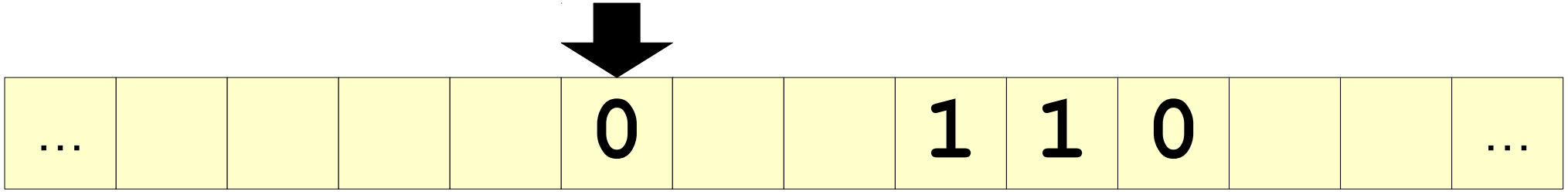

A Caveat

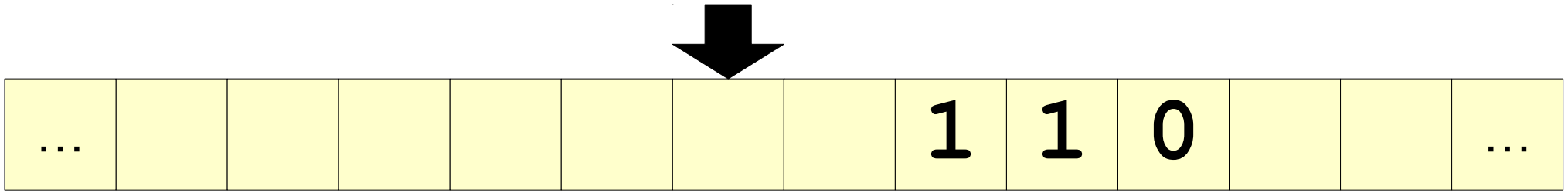

A Caveat

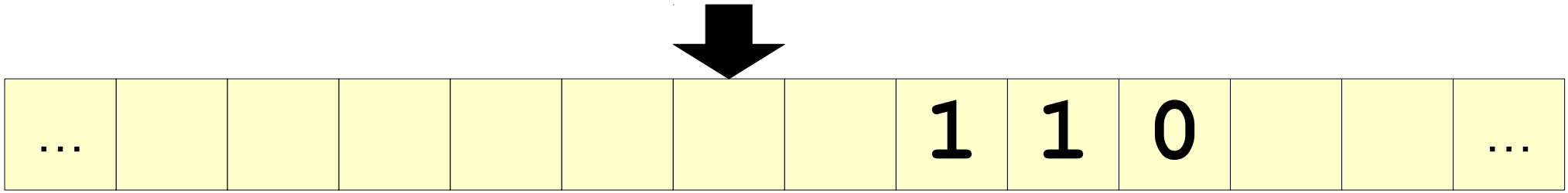

How do we know that this blank isn't one of the infinitely many blanks after our input string?

A Caveat

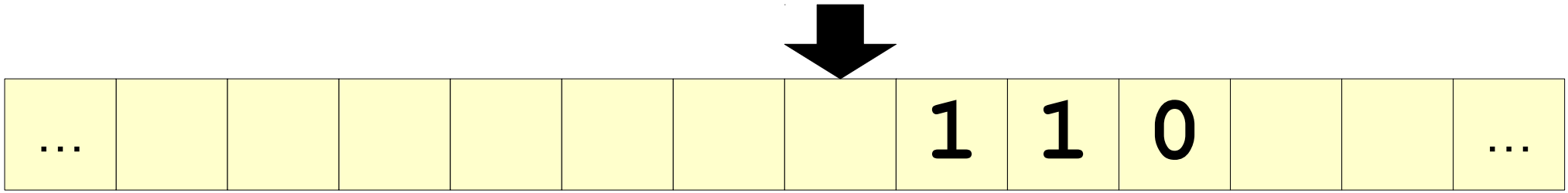

A Caveat

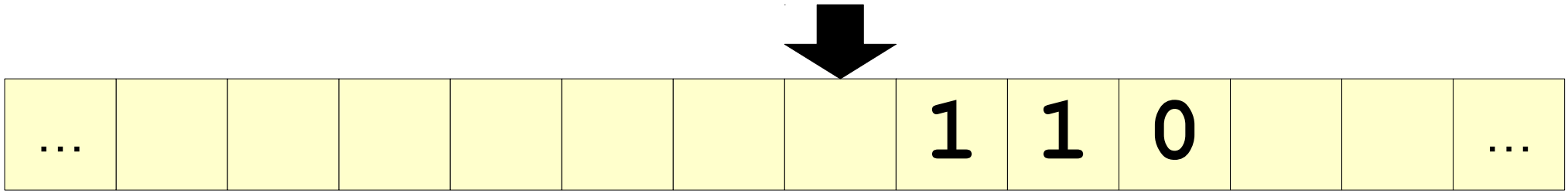

How do we know that this blank isn't one of the infinitely many blanks after our input string?

The Solution

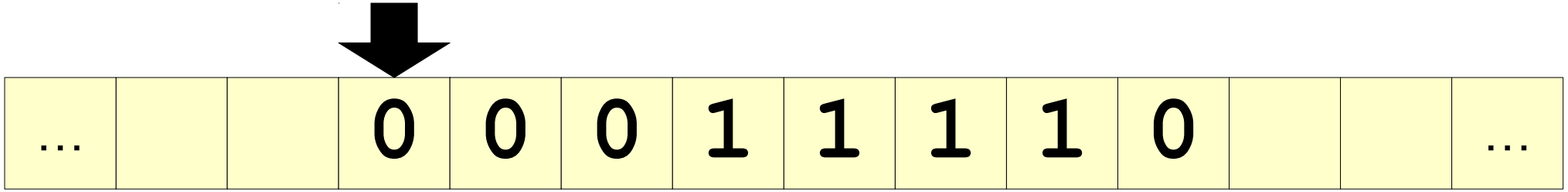

The Solution

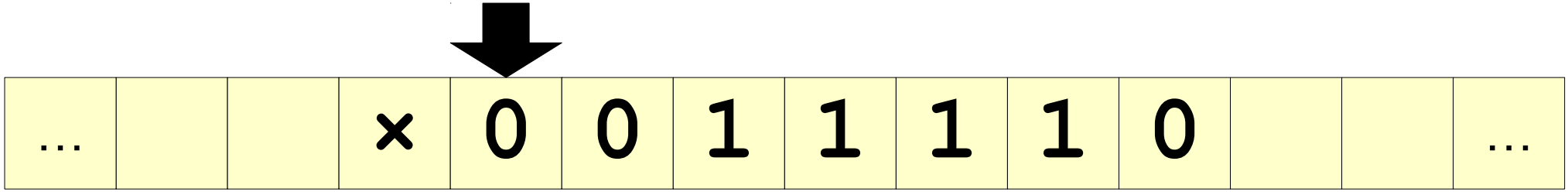

The Solution

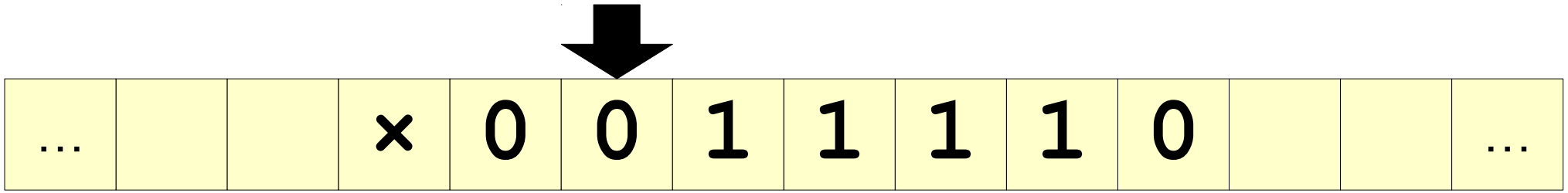

The Solution

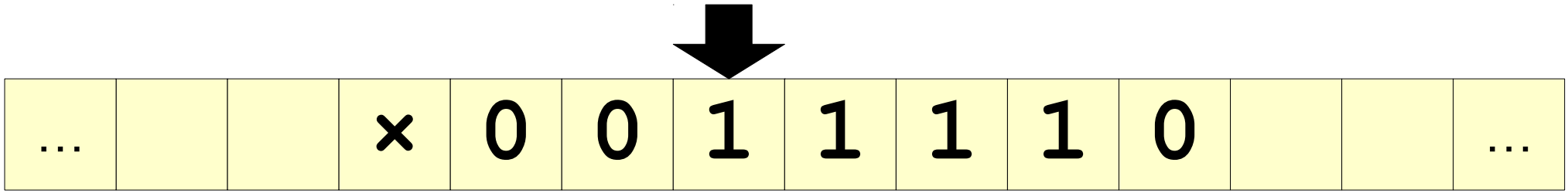

The Solution

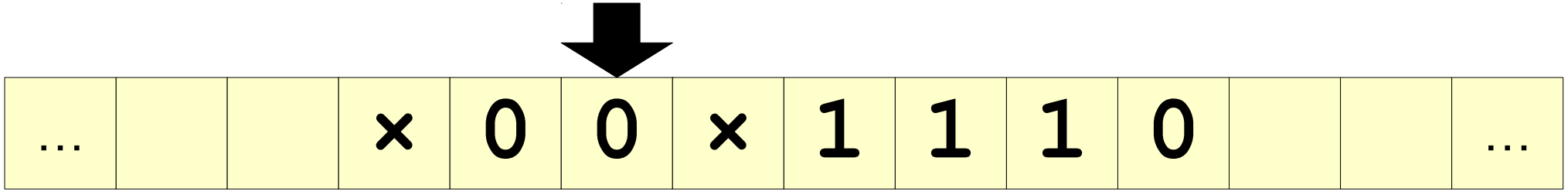

The Solution

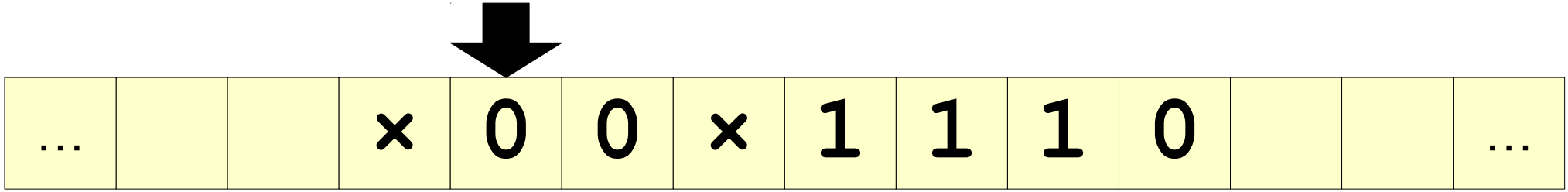

The Solution

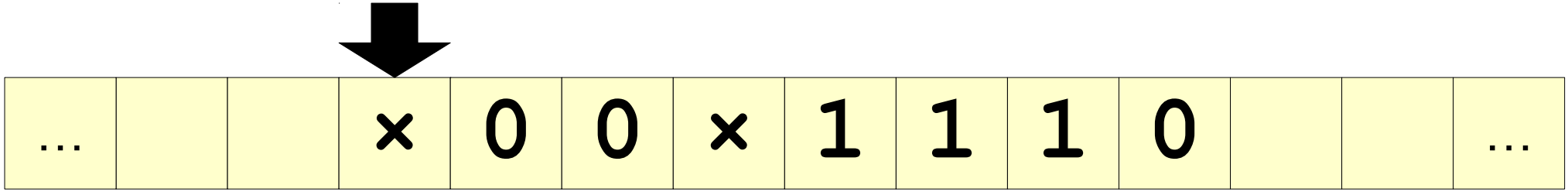

The Solution

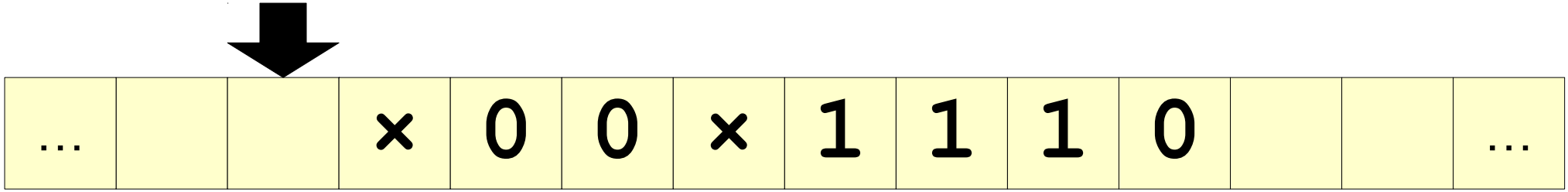

The Solution

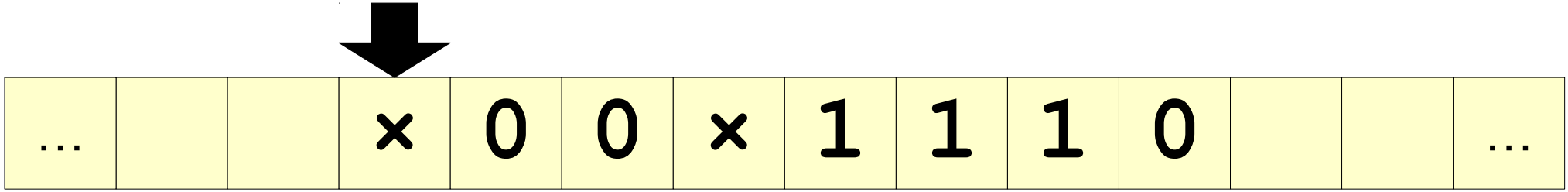

The Solution

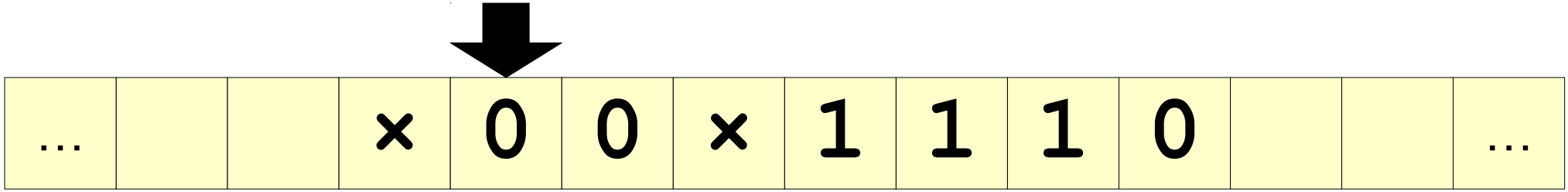

The Solution

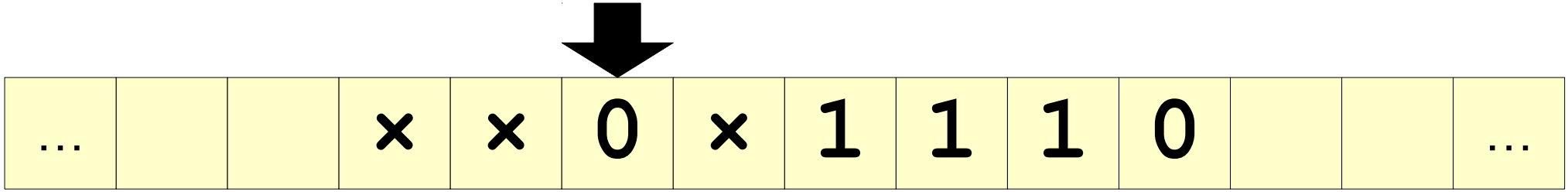

The Solution

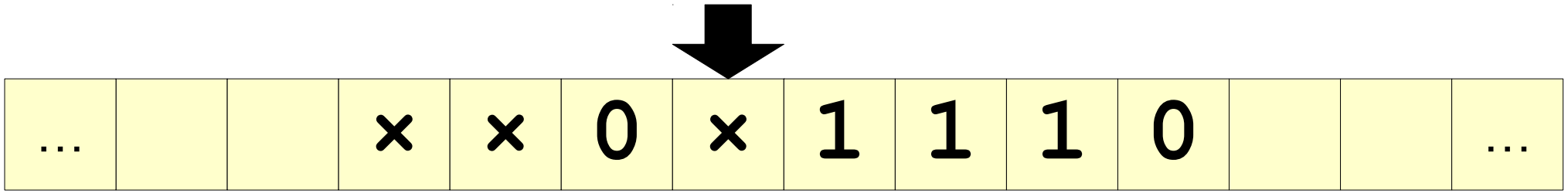

The Solution

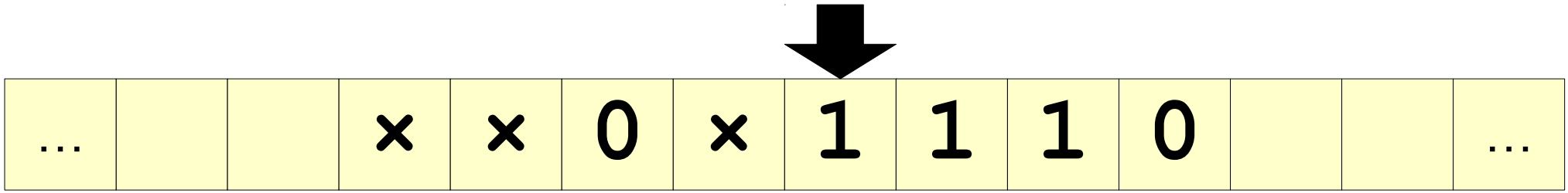

The Solution

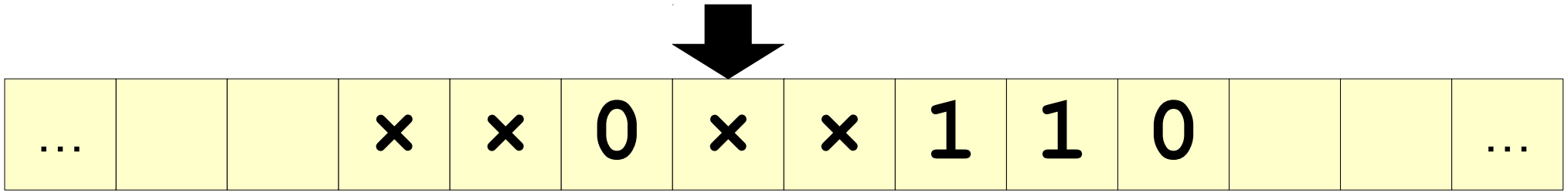

The Solution

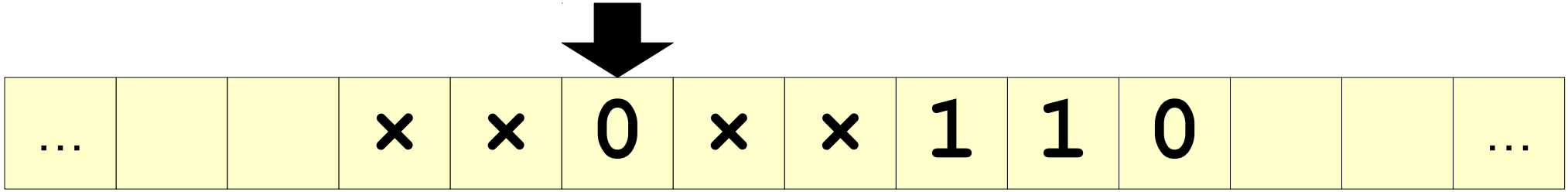

The Solution

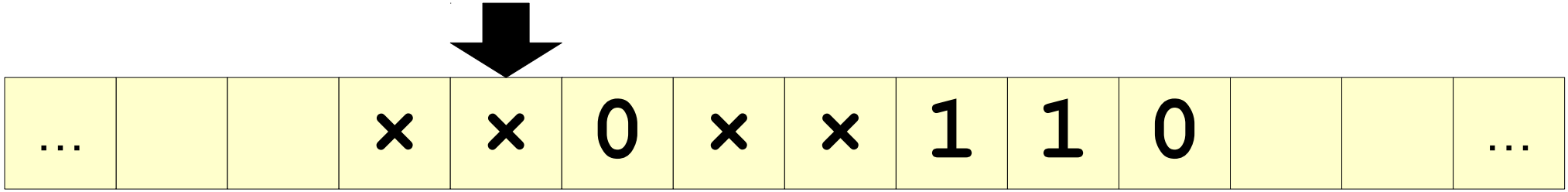

The Solution

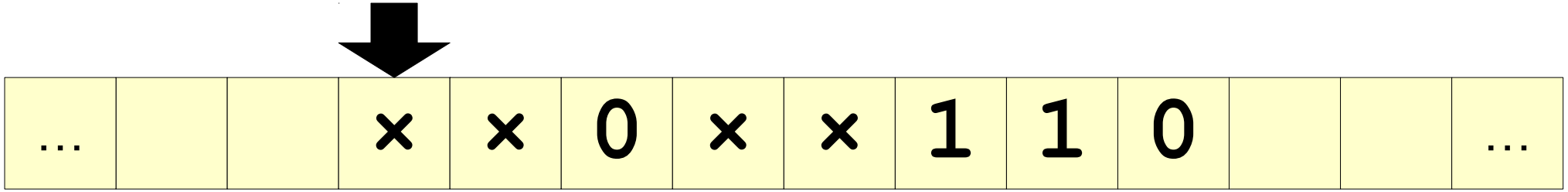

The Solution

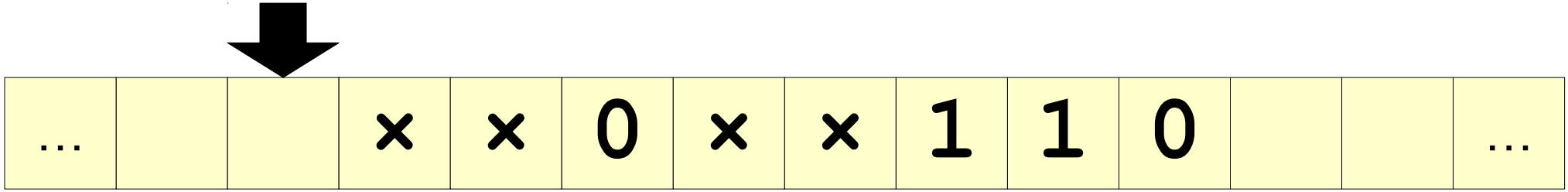

The Solution

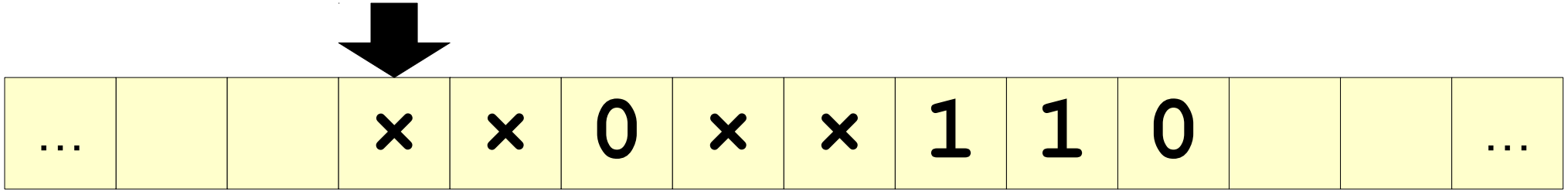

The Solution

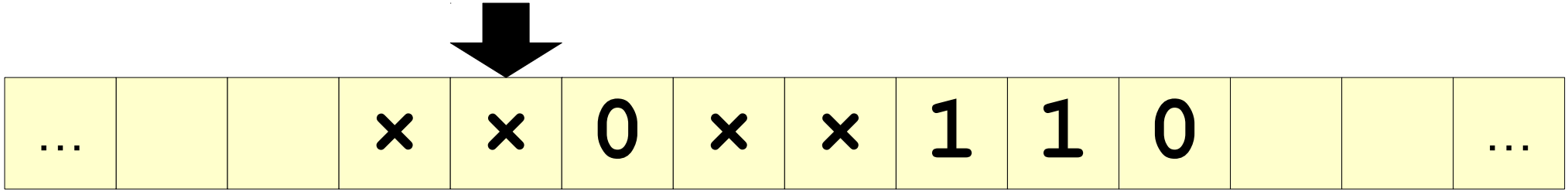

The Solution

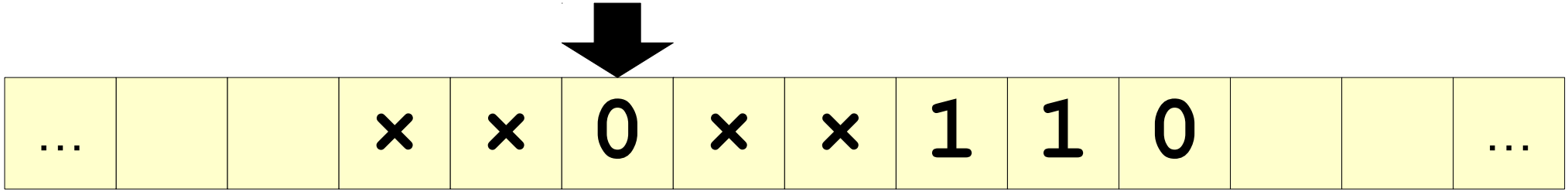

The Solution

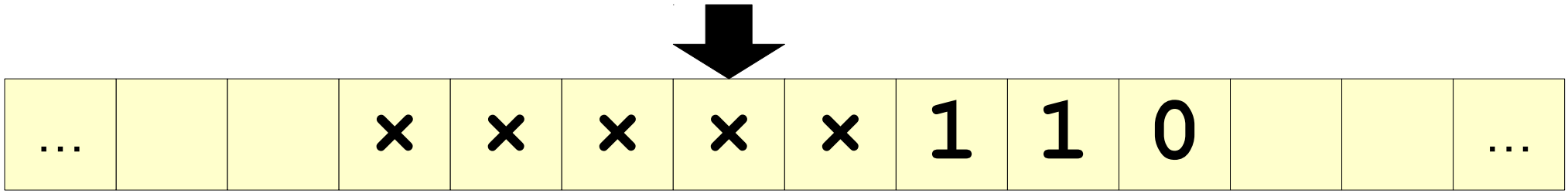

The Solution

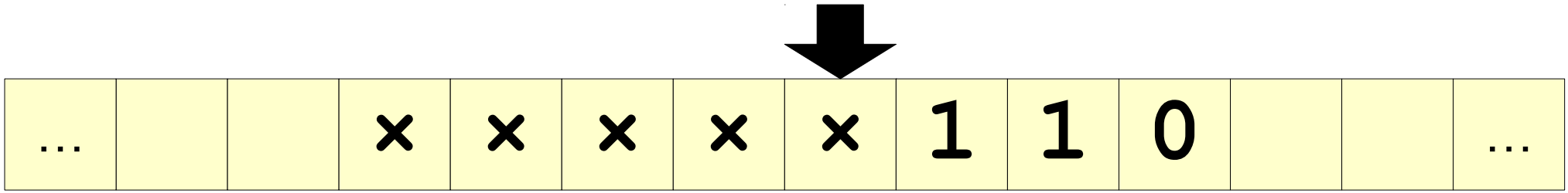

The Solution

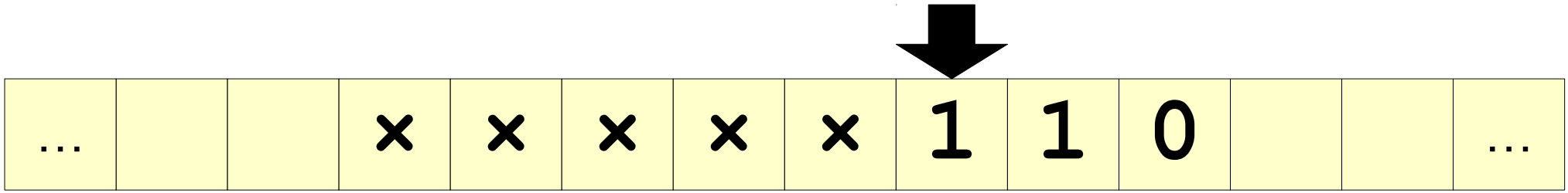

The Solution

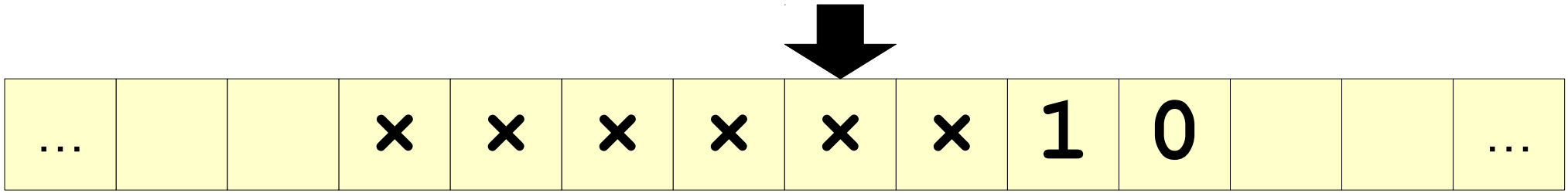

The Solution

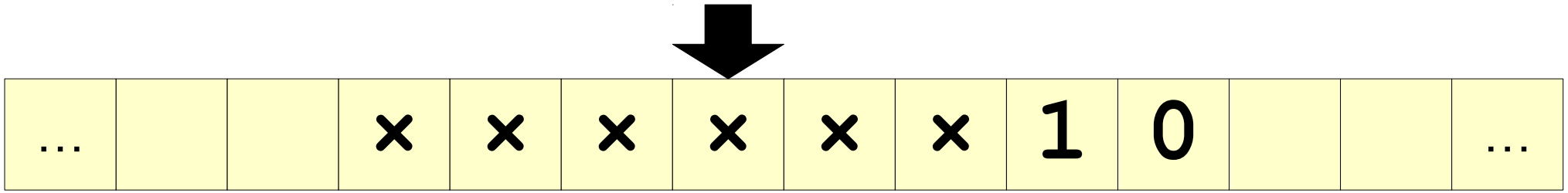

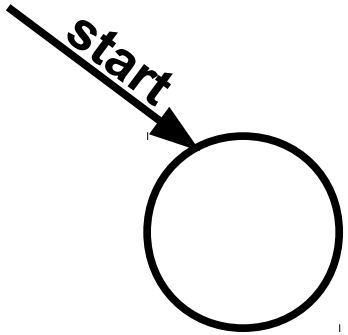
start

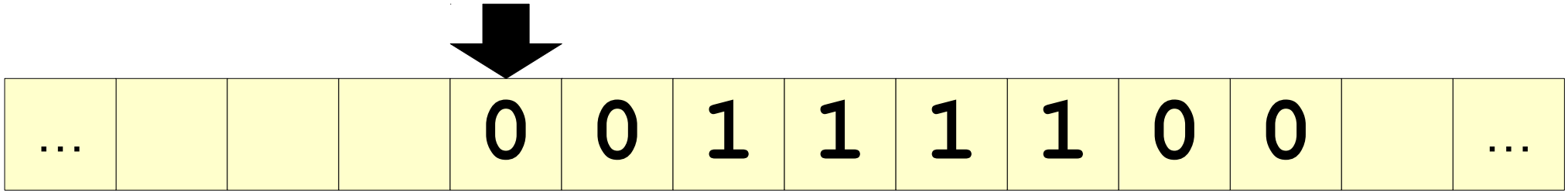
...
0 0 1 1 1 1 0 0
...

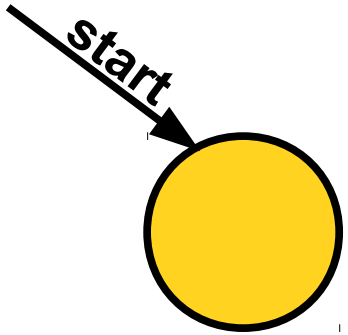
start

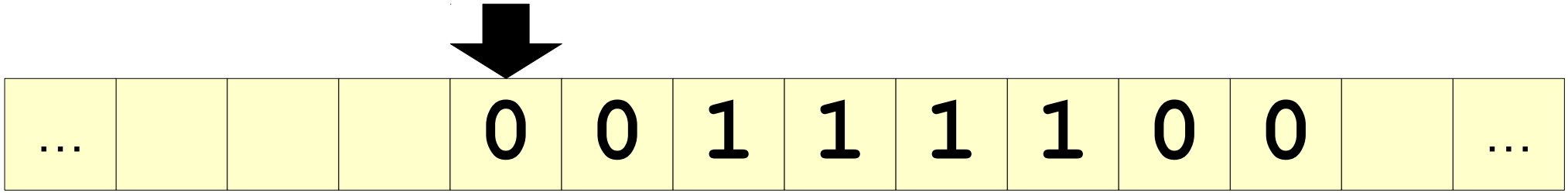
...
0 0 1 1 1 1 0 0
...

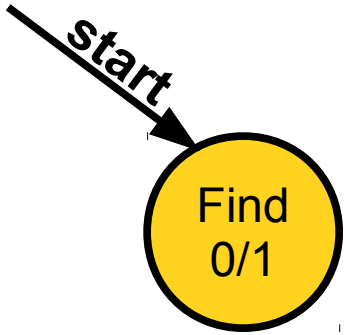
start
Find
0/1

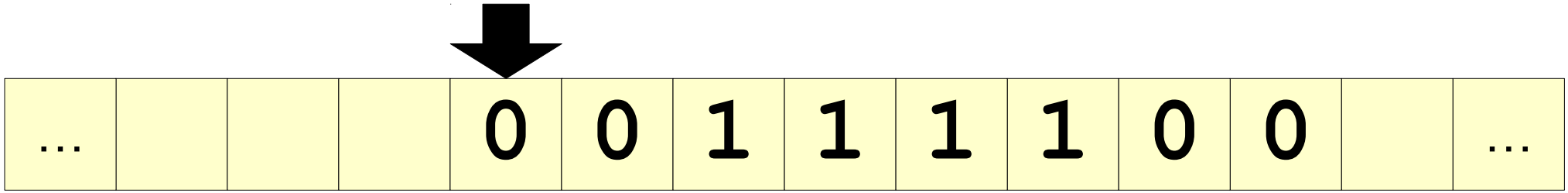
...
0 0 1 1 1 1 0 0
...

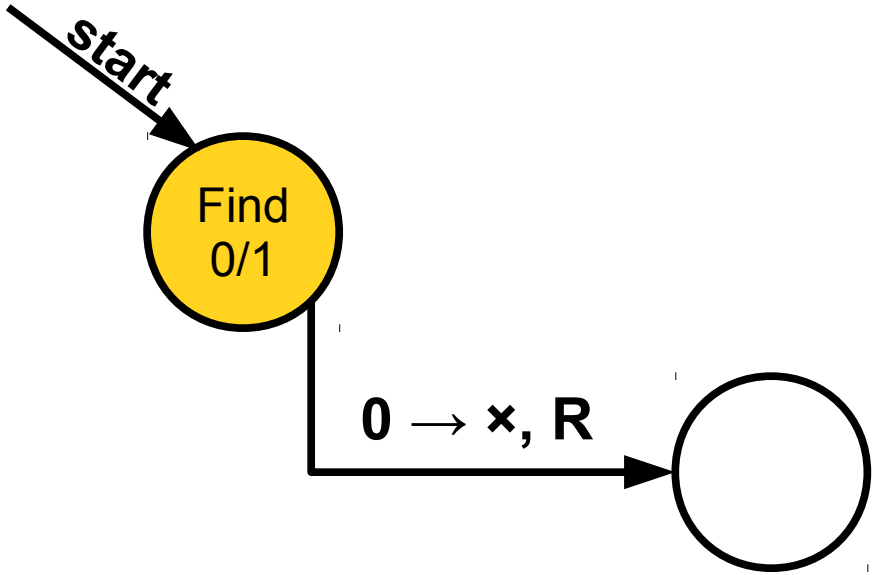
start
Find
0/1
0 → ×, R

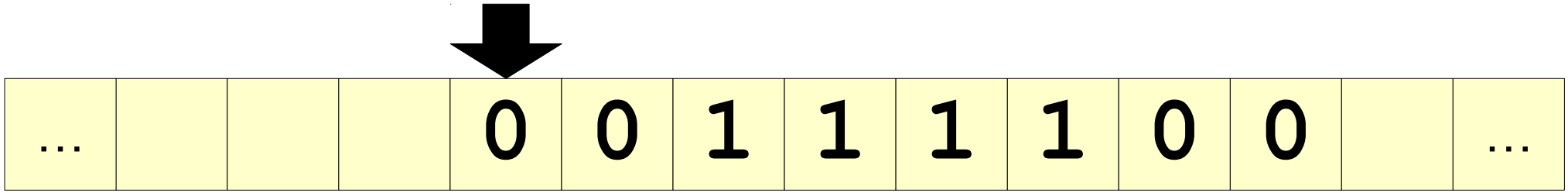
...
0 0 1 1 1 1 0 0
...

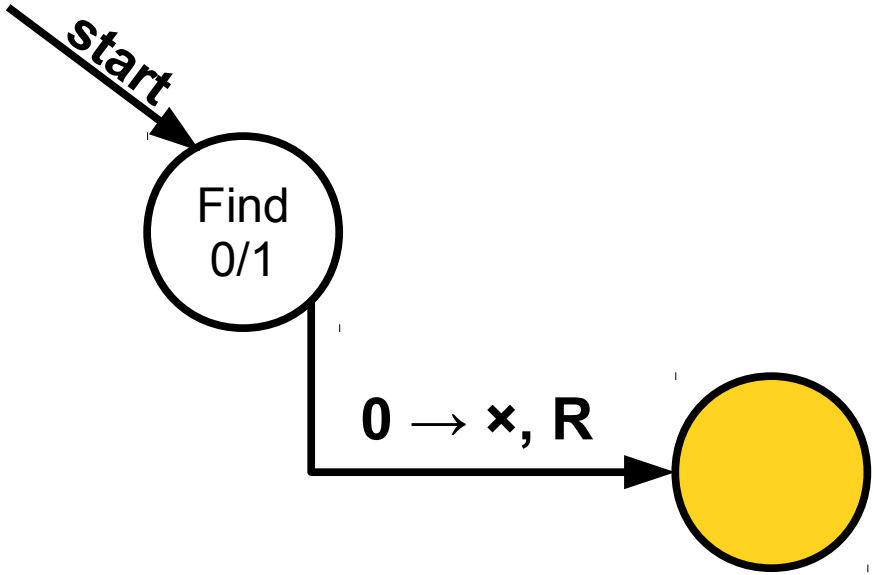
start
Find
0/1
0 → ×, R

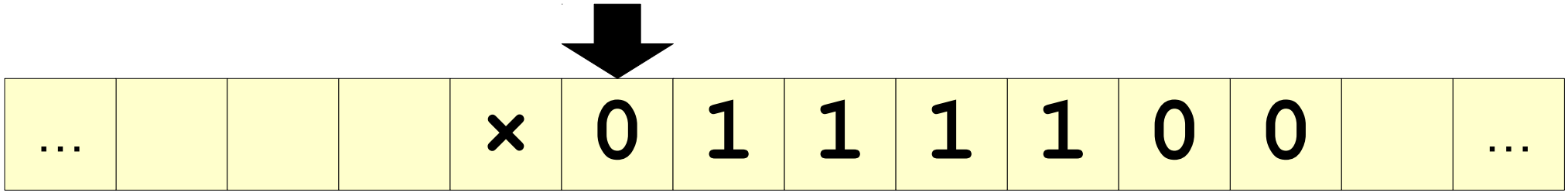
…
×
0
1
1
1
1
0
0
…

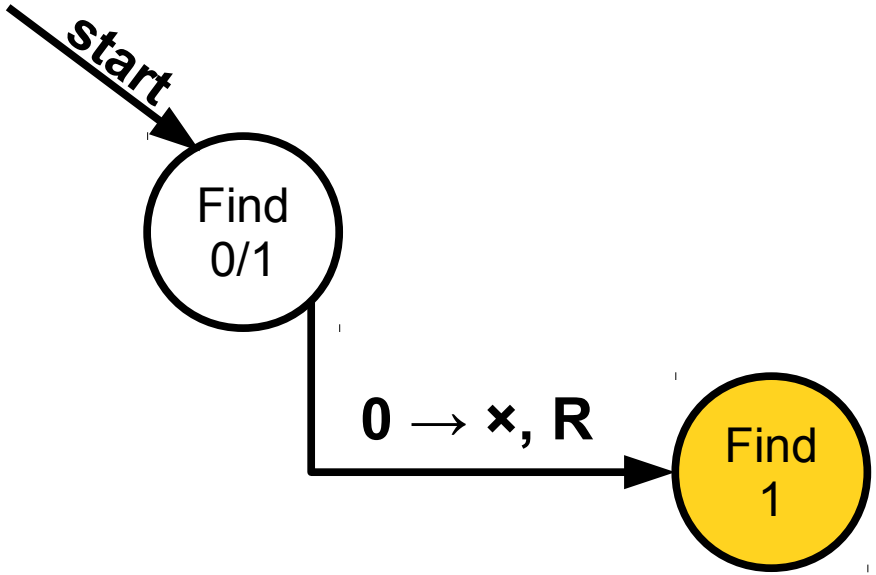
start
Find
0/1
0 → ×, R
Find
1

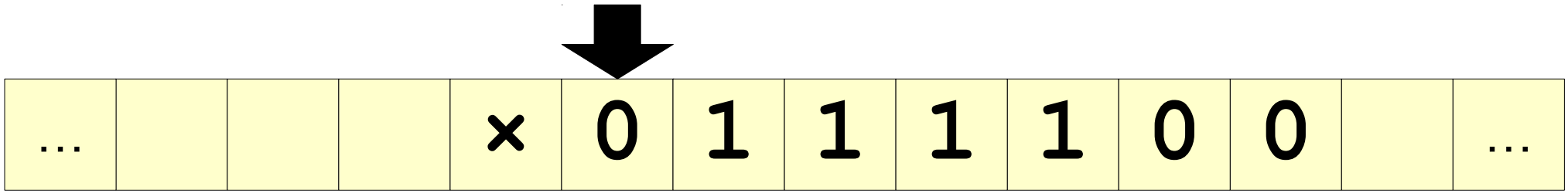
…
×
0
1
1
1
1
0
0
…

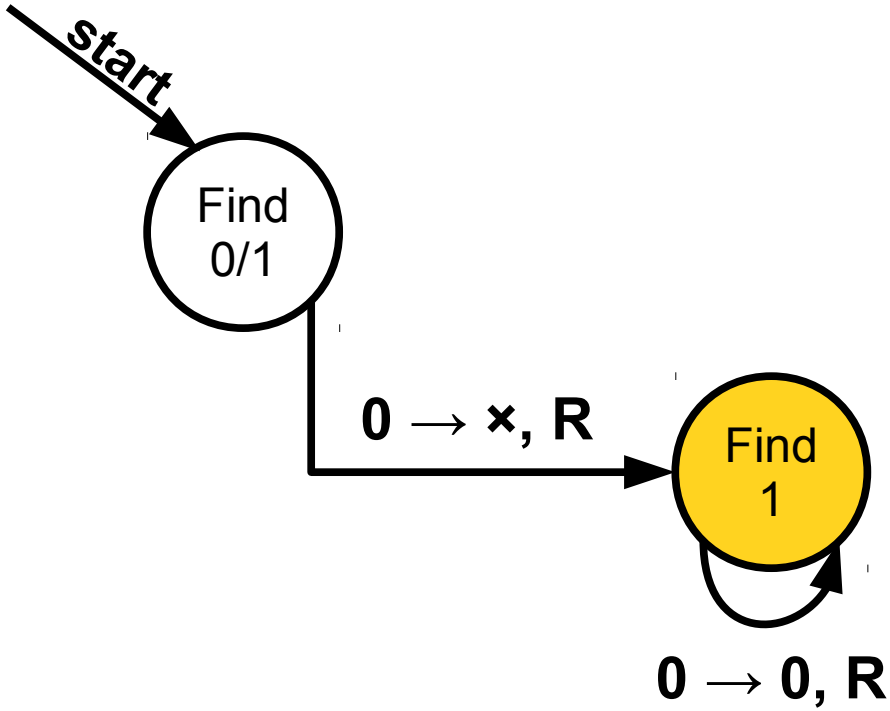

…				×	0	1	1	1	1	0	0		…

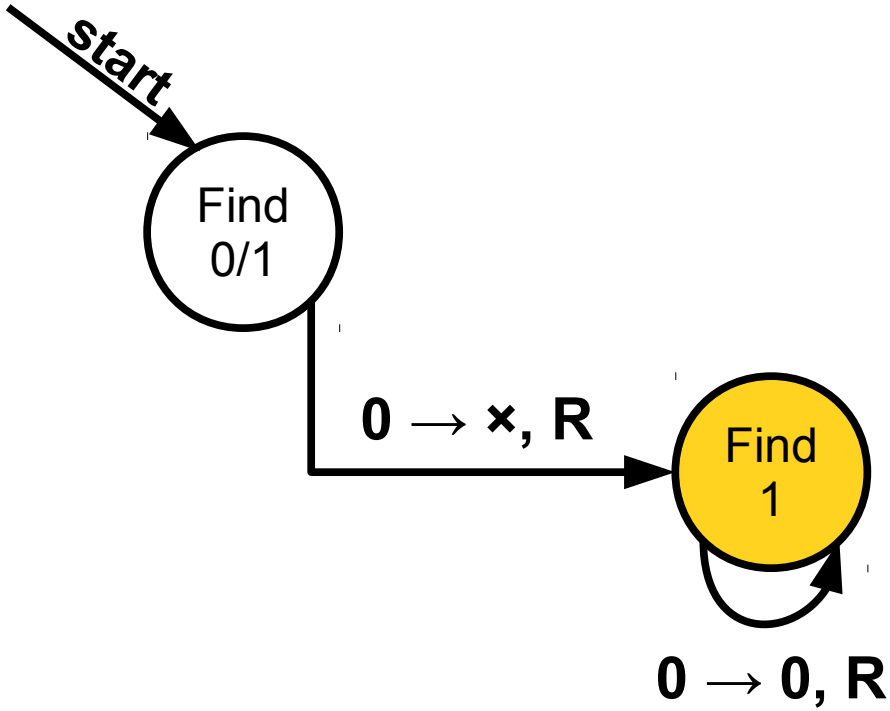
start
Find
0/1
0 → ×, R
Find
1
0 → 0, R

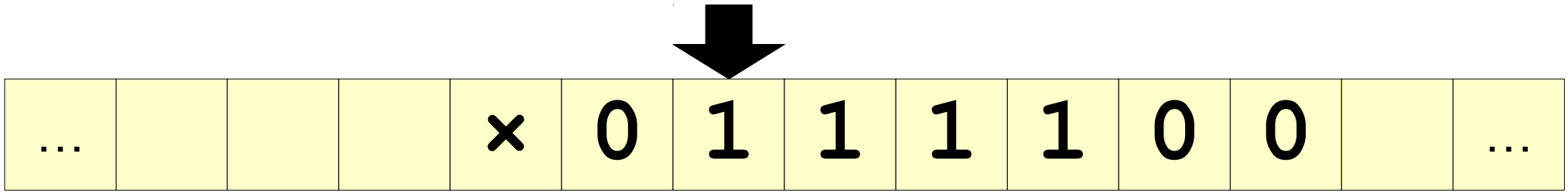
…
×
0
1
1
1
1
0
0
…

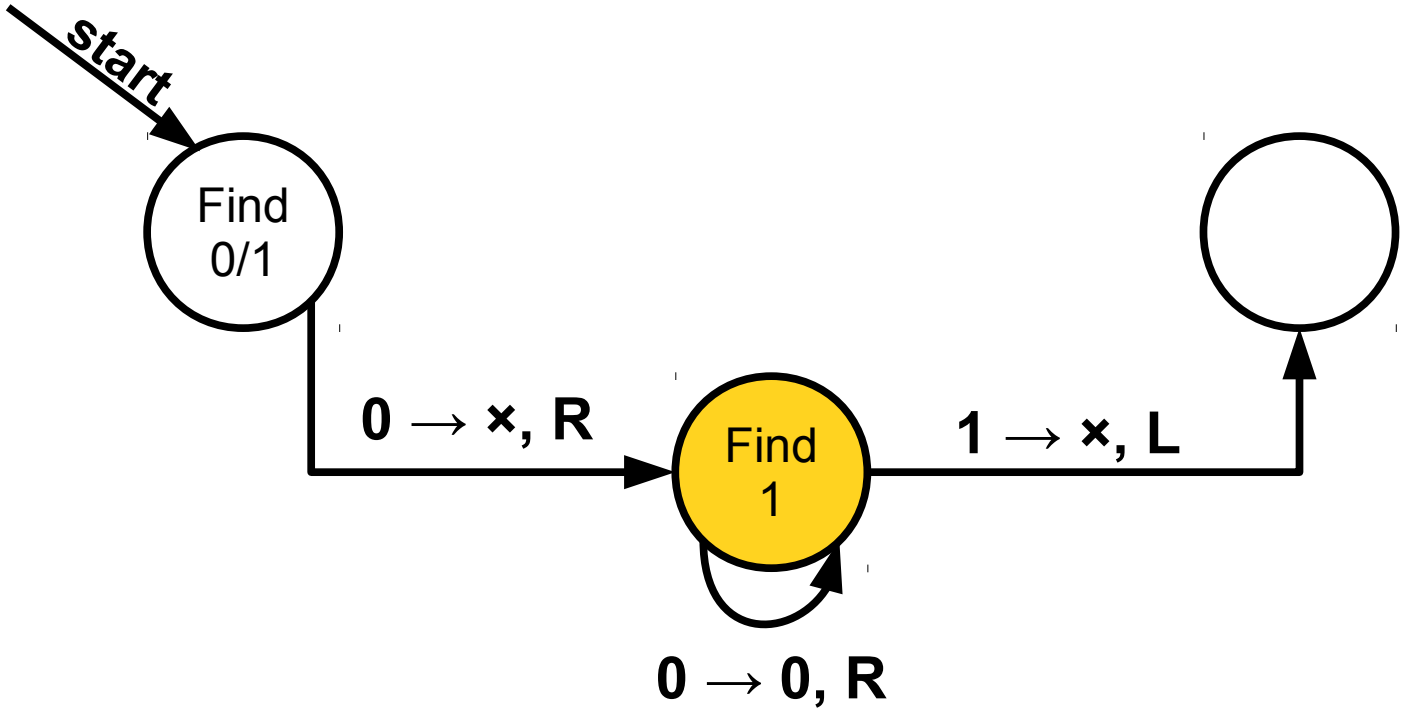
start
Find
0/1
0 → ×, R
Find
1
1 → ×, L
0 → 0, R

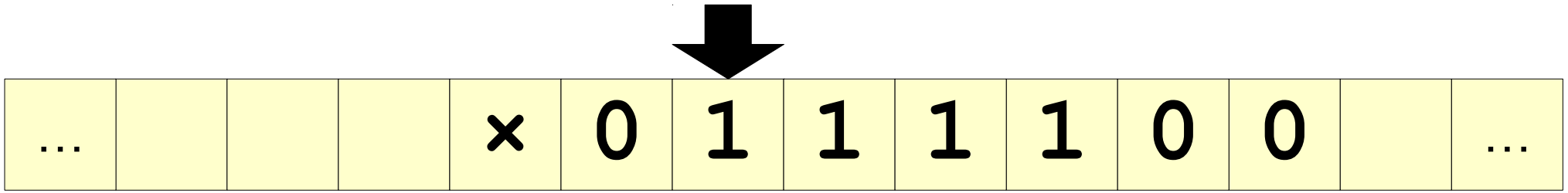
…
×
0
1
1
1
1
0
0
…

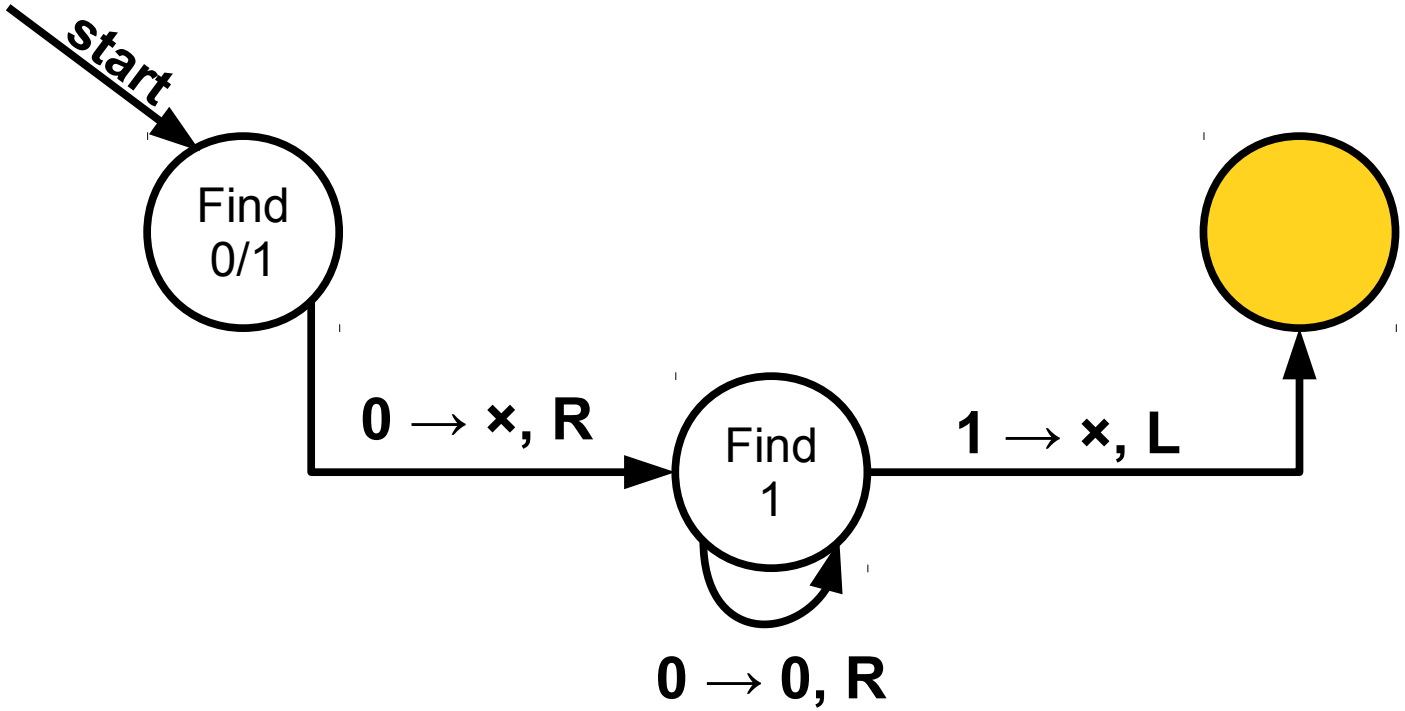

…				×	0	×	1	1	1	0	0		…

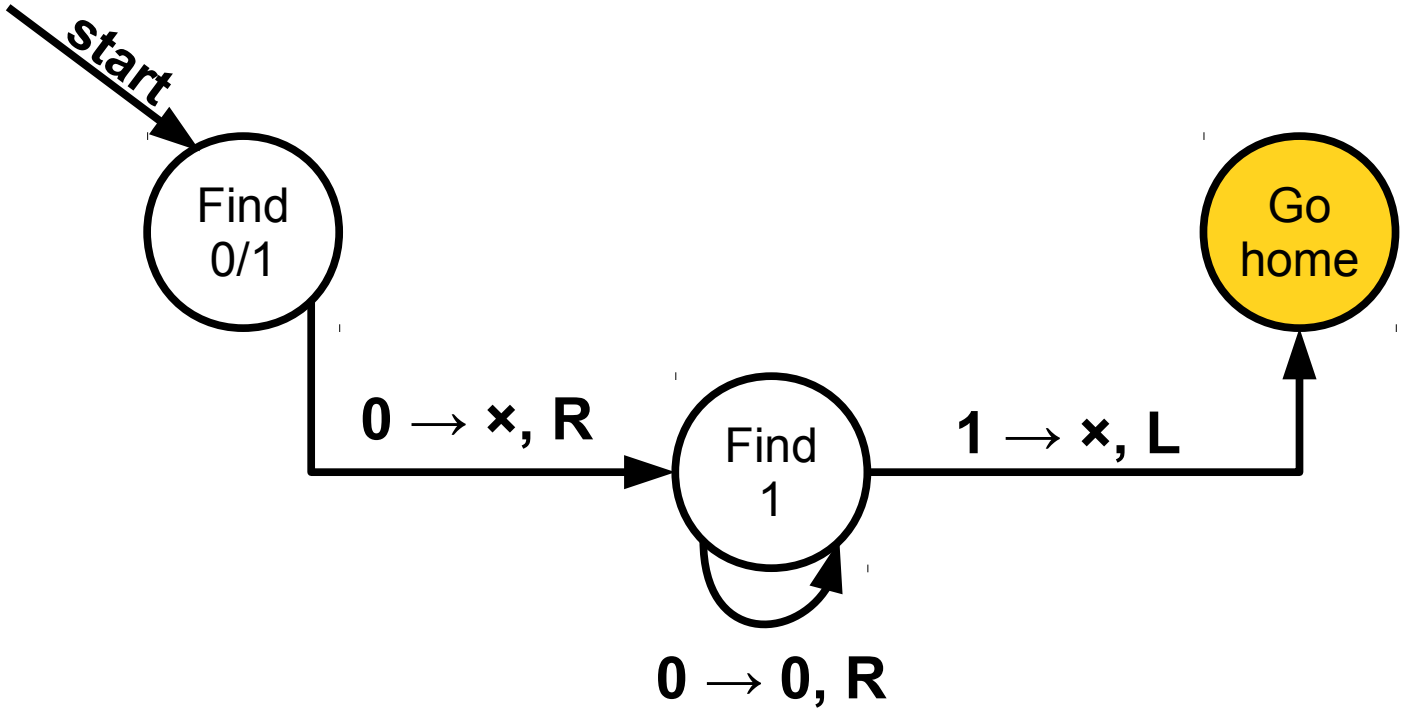

…				×	0	×	1	1	1	0	0		…

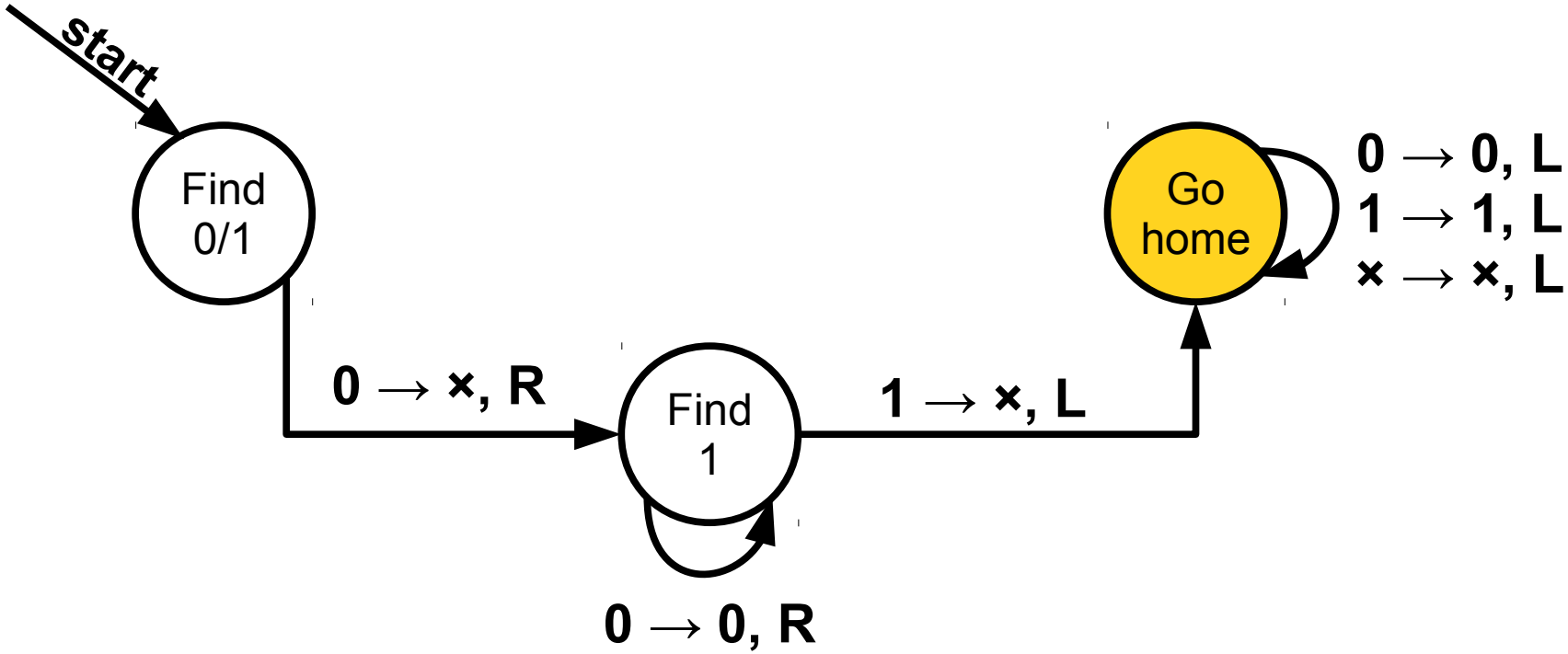
start
Find
0/1
0 → ×, R
Find
1
0 → 0, R
1 → ×, L
Go
home
0 → 0, L
1 → 1, L
× → ×, L

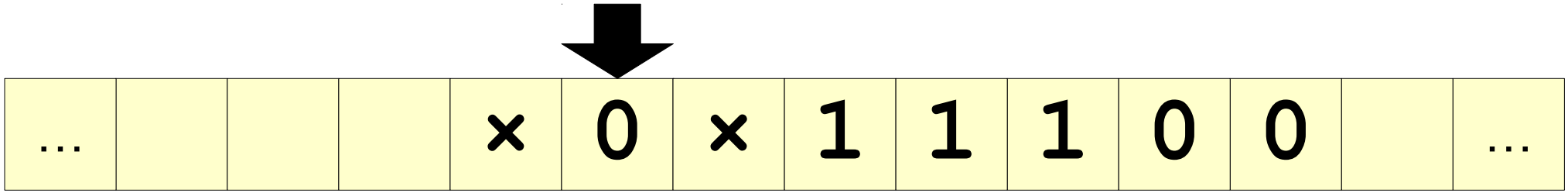
…
×
0
×
1
1
1
0
0
…

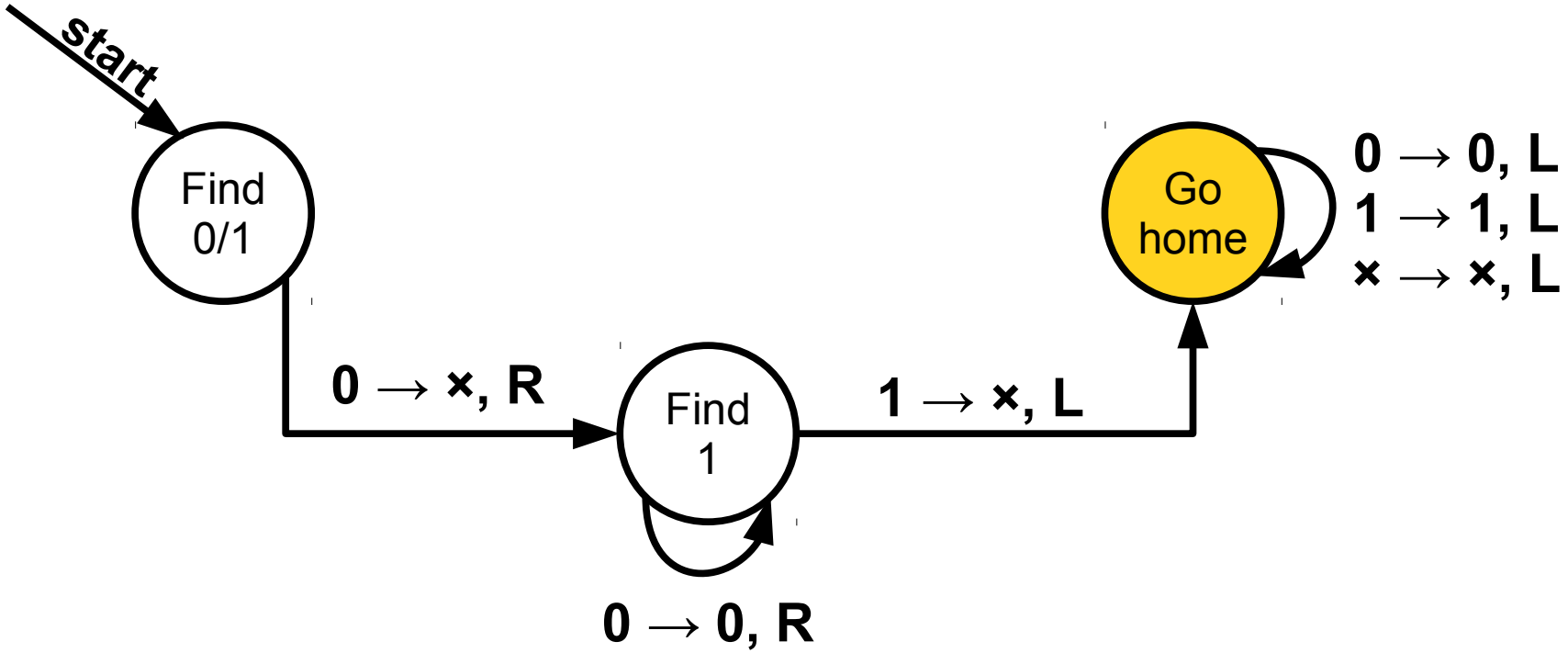
start
Find
0/1
0 → ×, R
Find
1
0 → 0, R
1 → ×, L
Go
home
0 → 0, L
1 → 1, L
× → ×, L

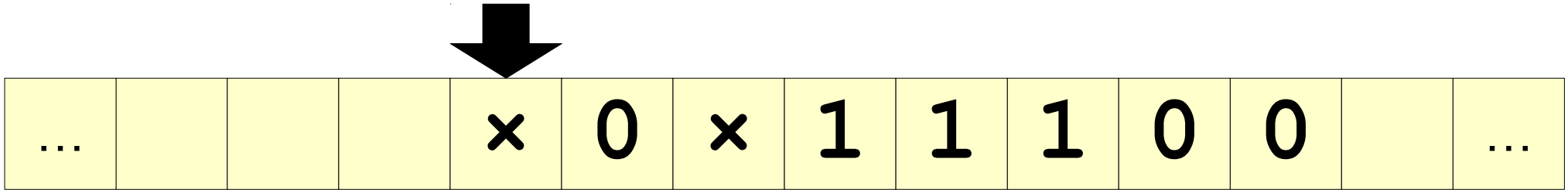
…
×
0
×
1
1
1
0
0
…

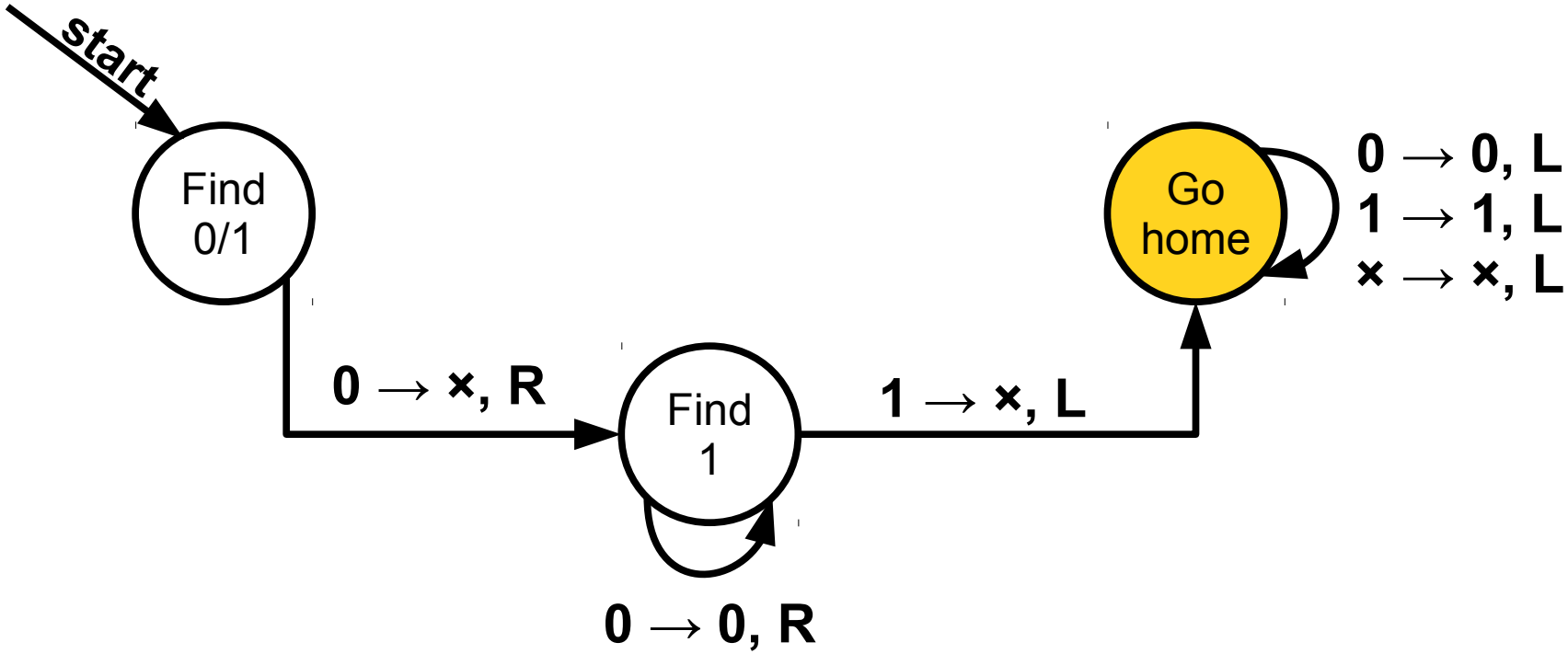
start
Find
0/1
0 → ×, R
Find
1
0 → 0, R
1 → ×, L
Go
home
0 → 0, L
1 → 1, L
× → ×, L

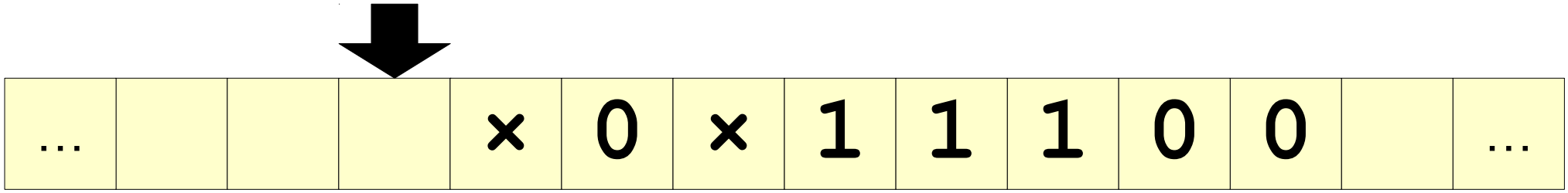
…
×
0
×
1
1
1
0
0
…

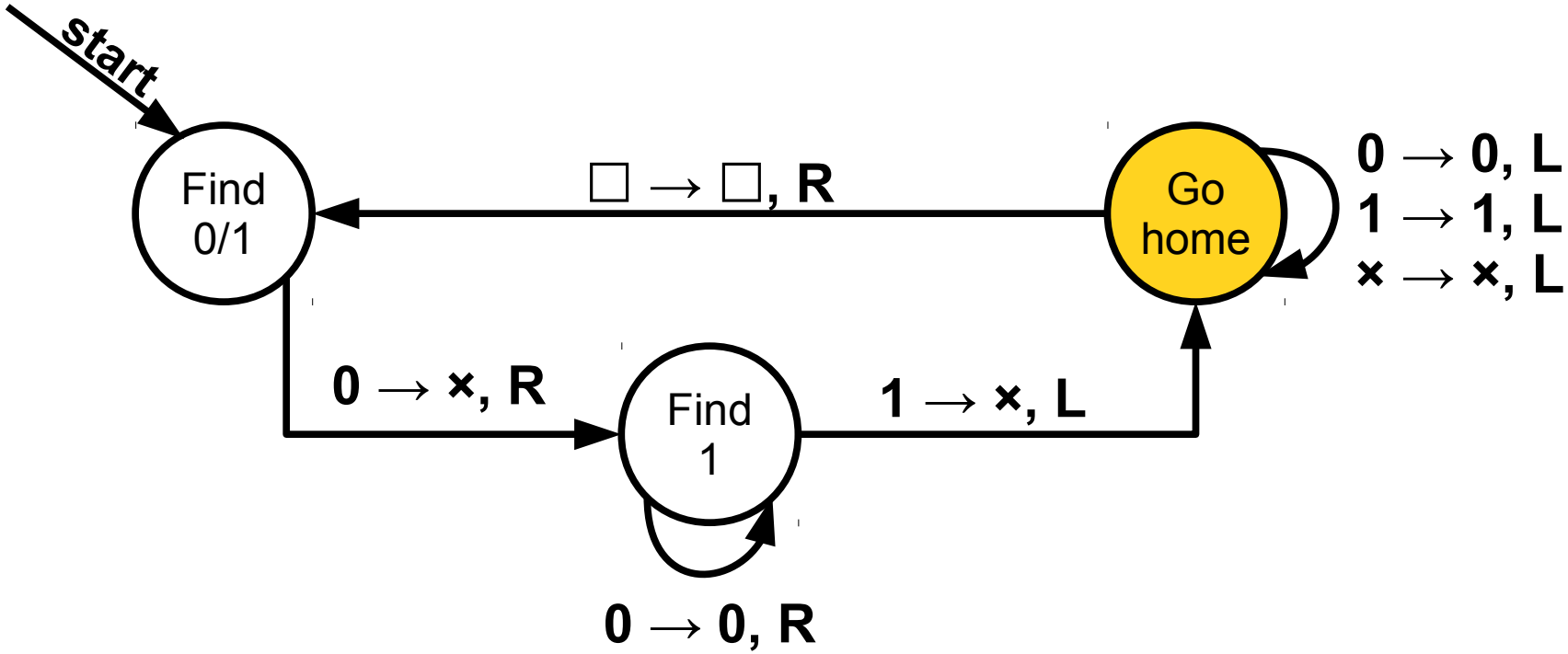
start
Find
0/1
□ → □, R
Go
home
0 → 0, L
1 → 1, L
× → ×, L
0 → ×, R
Find
1
1 → ×, L
0 → 0, R

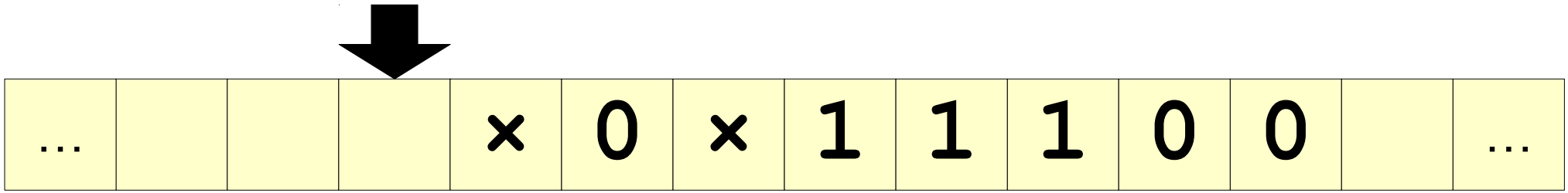
…
×
0
×
1
1
1
0
0
…

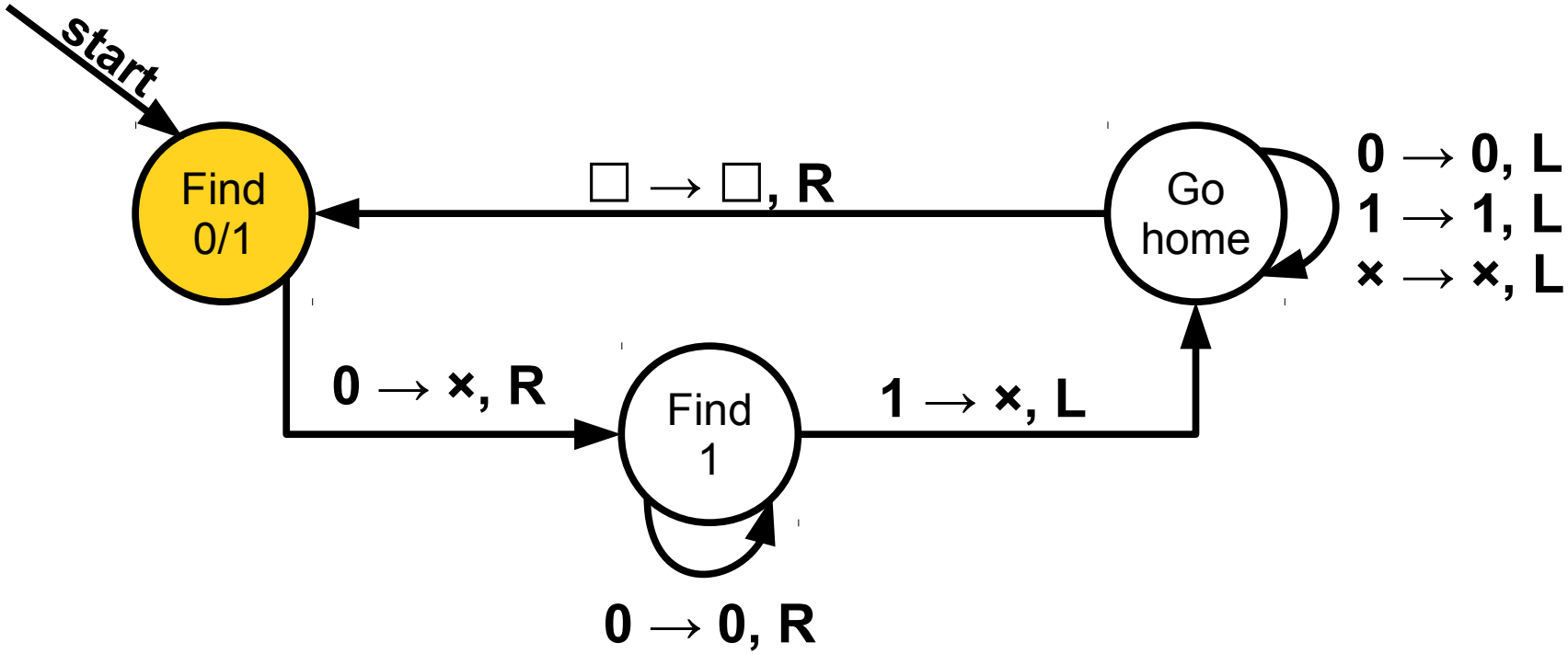
start
Find
0/1
□ → □, R
Go
home
0 → 0, L
1 → 1, L
× → ×, L
0 → ×, R
Find
1
1 → ×, L
0 → 0, R

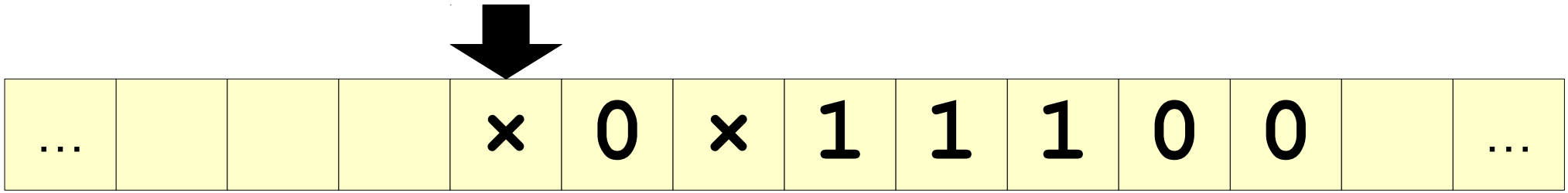
...
×
0
×
1
1
1
0
0
...

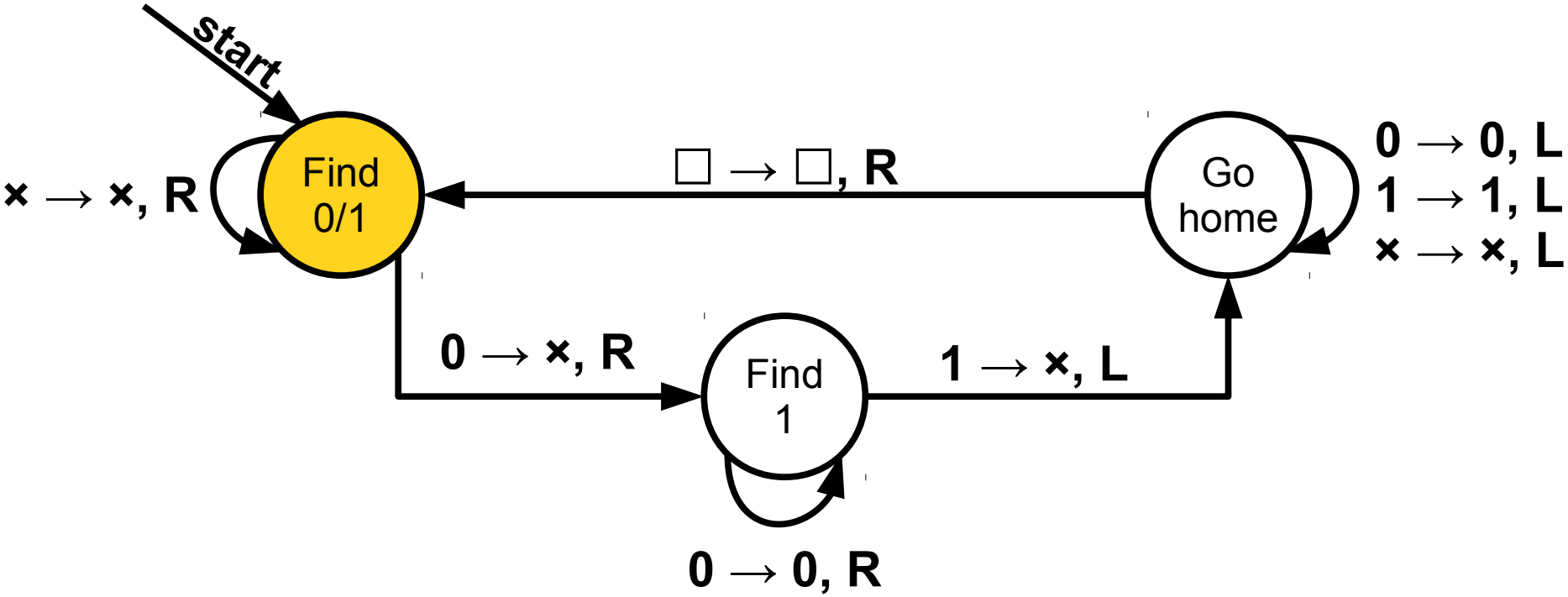

…				×	0	×	1	1	1	0	0		…

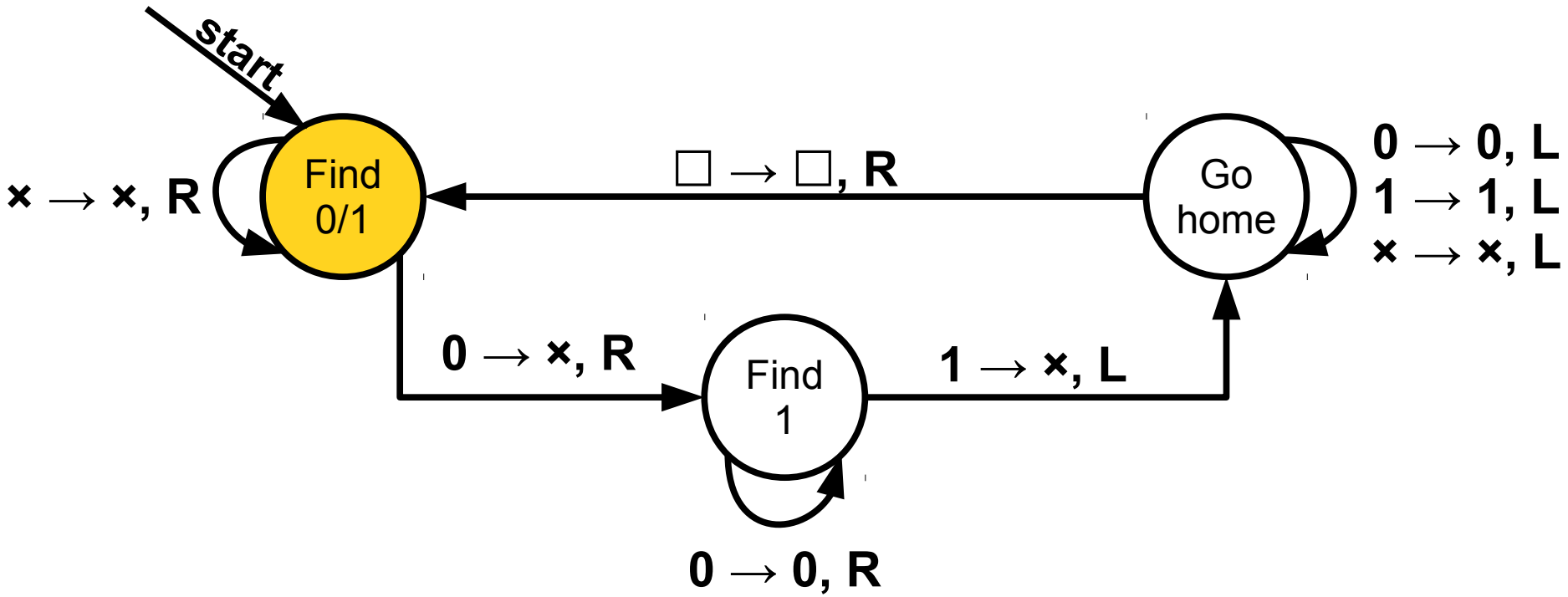

…				×	0	×	1	1	1	0	0		…

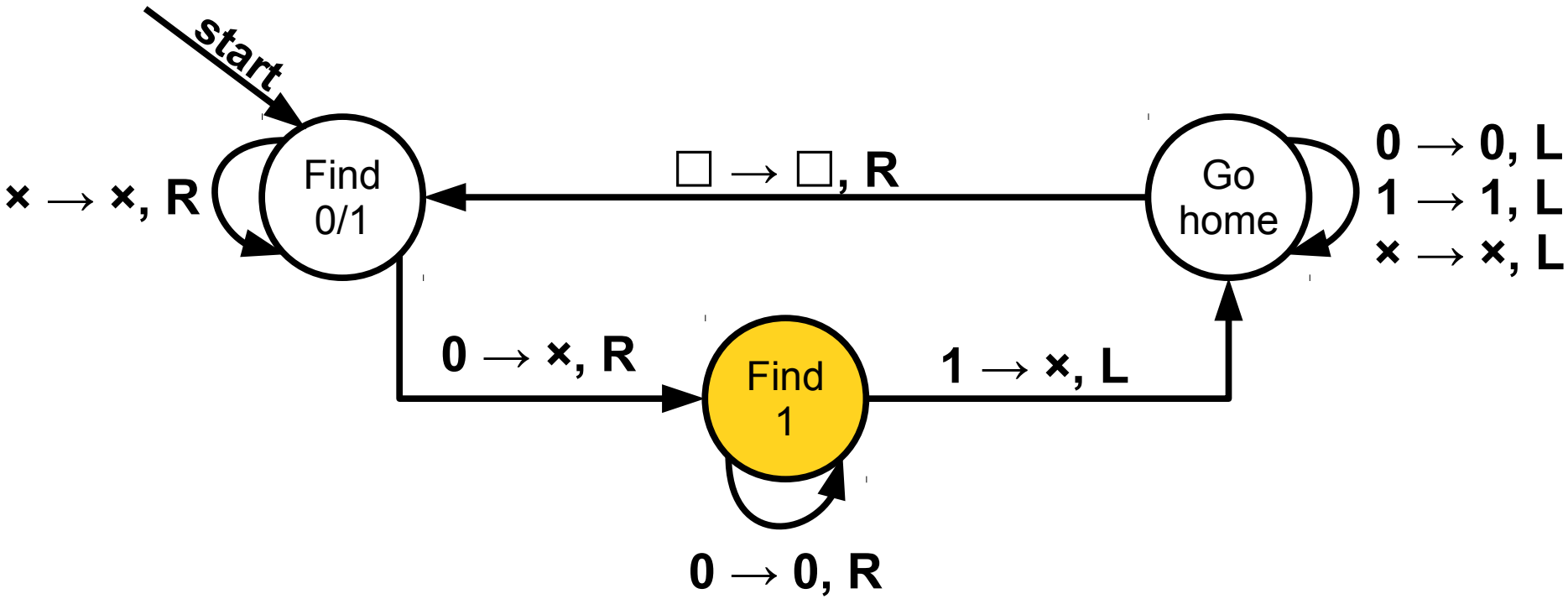
start
Find 0/1
× → ×, R
□ → □, R
Go home
0 → 0, L
1 → 1, L
× → ×, L
0 → ×, R
Find 1
1 → ×, L
0 → 0, R

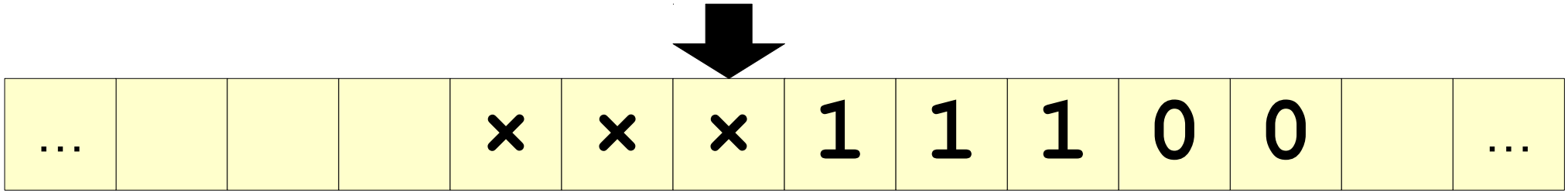
... × × × 1 1 1 0 0 ...

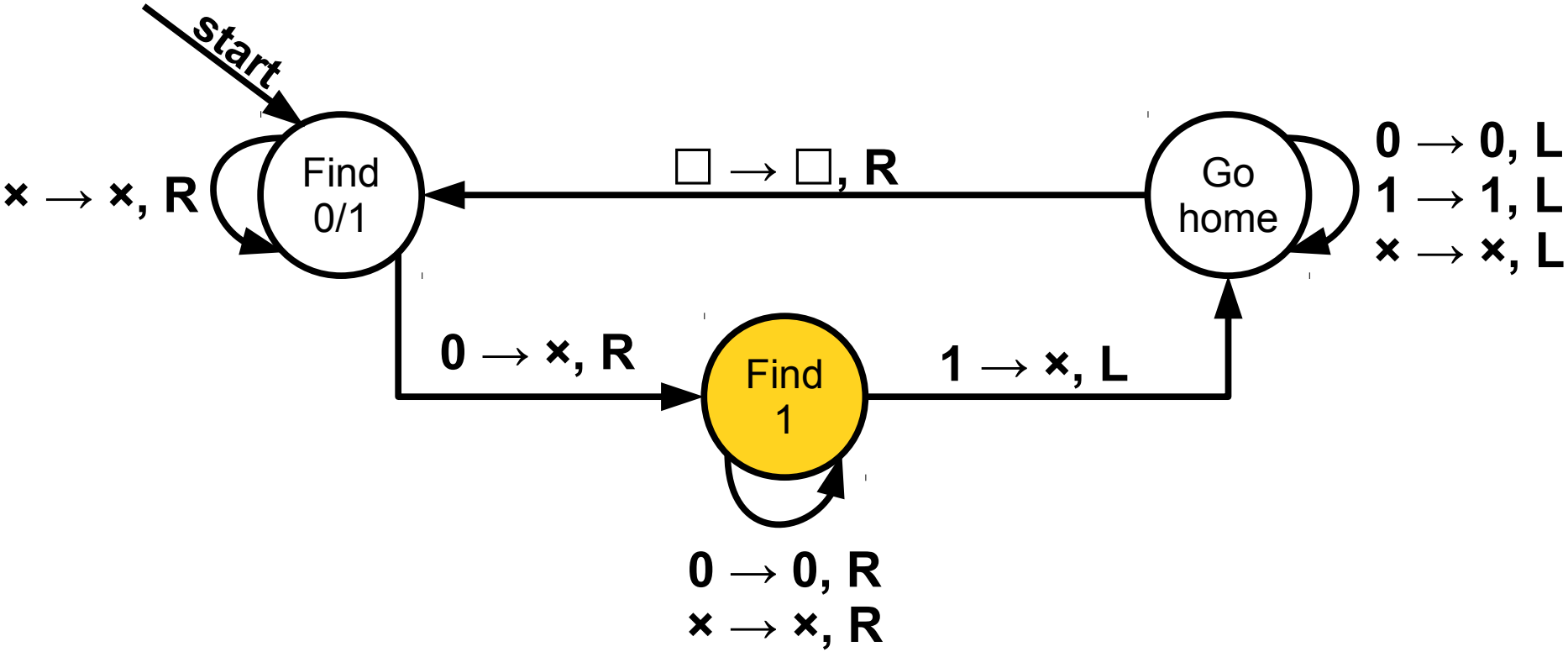
start
Find 0/1
× → ×, R
□ → □, R
Go home
0 → 0, L
1 → 1, L
× → ×, L
0 → ×, R
Find 1
1 → ×, L
0 → 0, R
× → ×, R

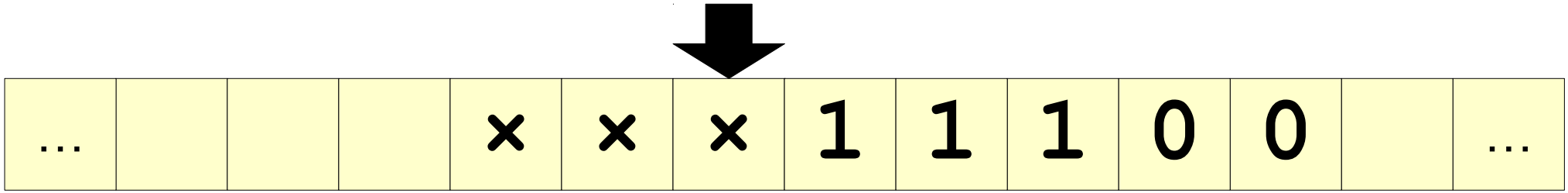
... × × × 1 1 1 0 0 ...

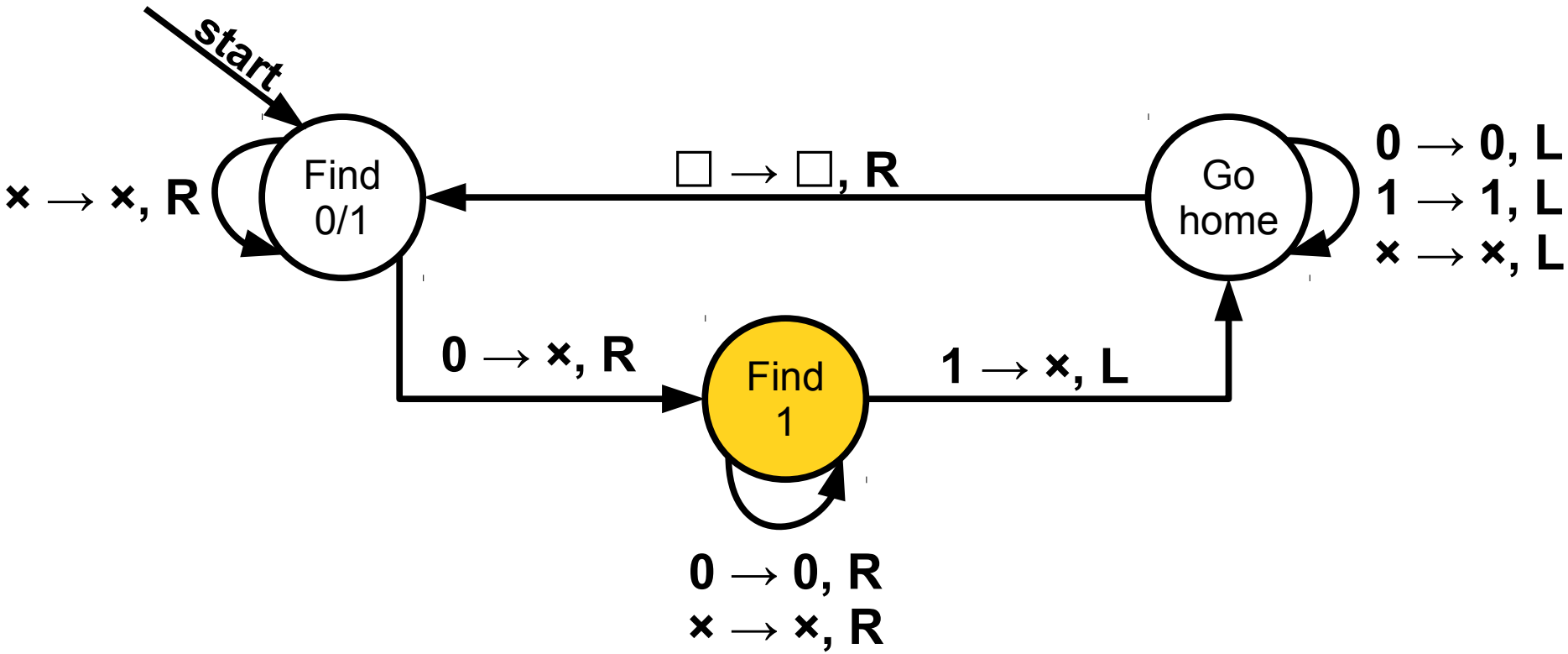
start
Find 0/1
× → ×, R
□ → □, R
Go home
0 → 0, L
1 → 1, L
× → ×, L
0 → ×, R
Find 1
1 → ×, L
0 → 0, R
× → ×, R

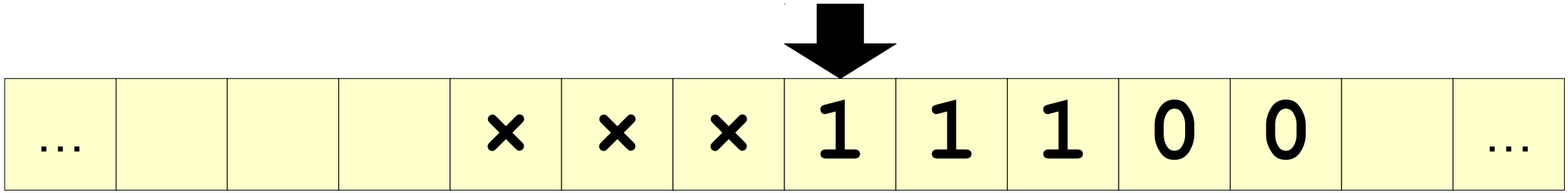
... × × × 1 1 1 0 0 ...

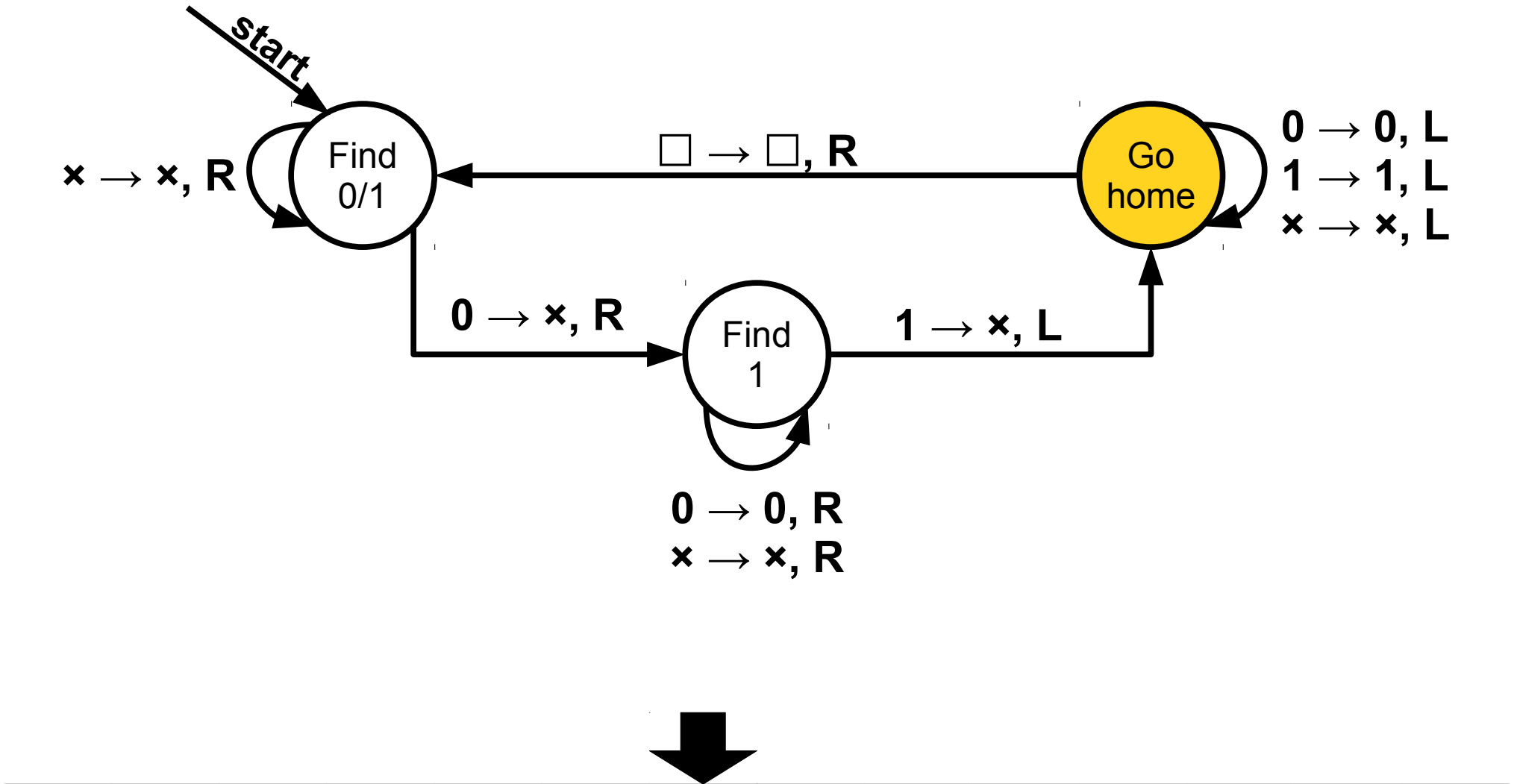
start
Find 0/1
× → ×, R
□ → □, R
Go home
0 → 0, L
1 → 1, L
× → ×, L
0 → ×, R
Find 1
1 → ×, L
0 → 0, R
× → ×, R
… × × × × 1 1 0 0 …

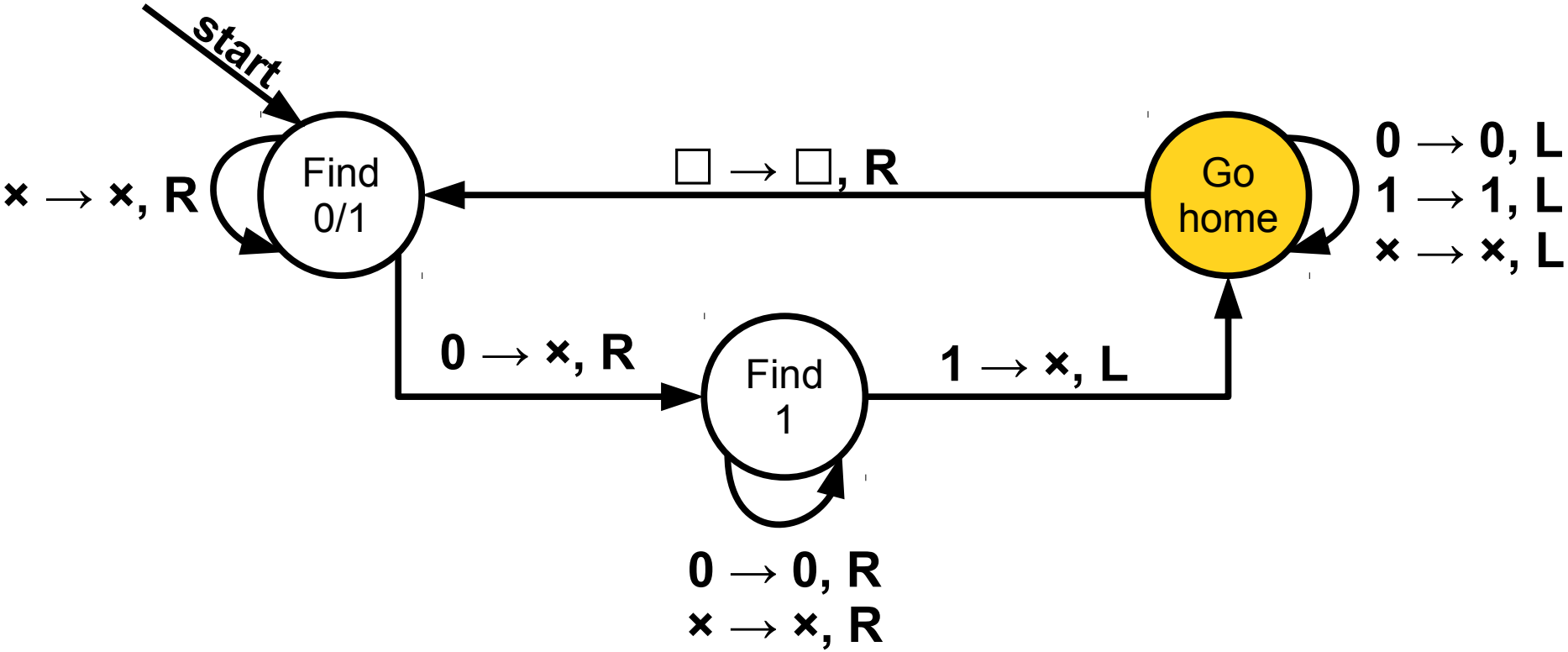
start
Find 0/1
× → ×, R
□ → □, R
Go home
0 → 0, L
1 → 1, L
× → ×, L
0 → ×, R
Find 1
1 → ×, L
0 → 0, R
× → ×, R

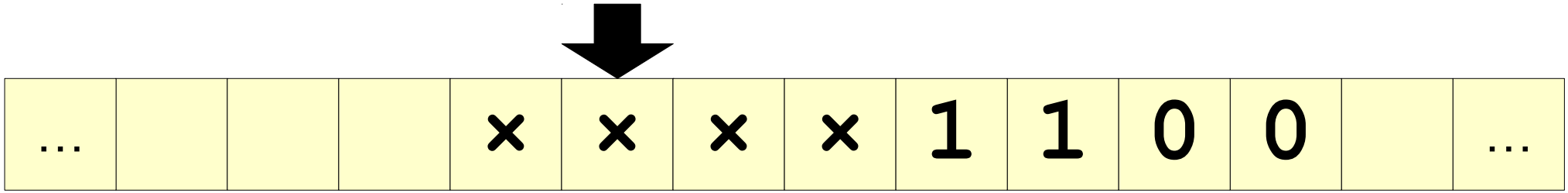
... × × × × 1 1 0 0 ...

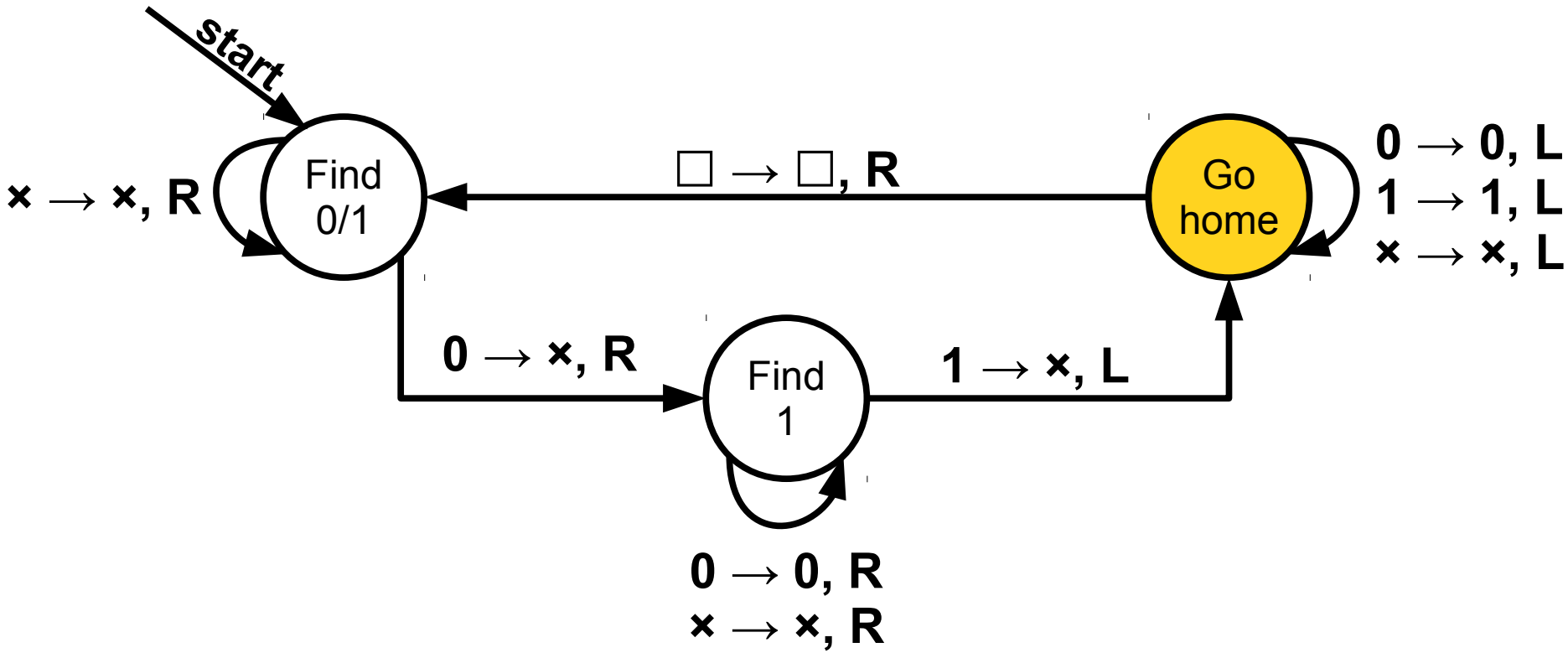
start
Find 0/1
× → ×, R
□ → □, R
Go home
0 → 0, L
1 → 1, L
× → ×, L
0 → ×, R
Find 1
1 → ×, L
0 → 0, R
× → ×, R

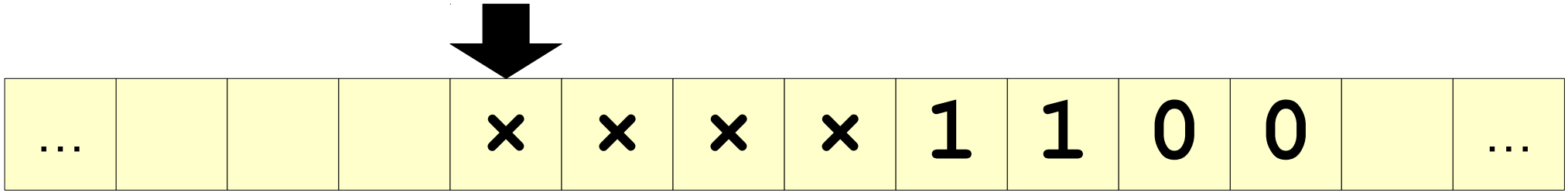
…
×
×
×
×
1
1
0
0
…

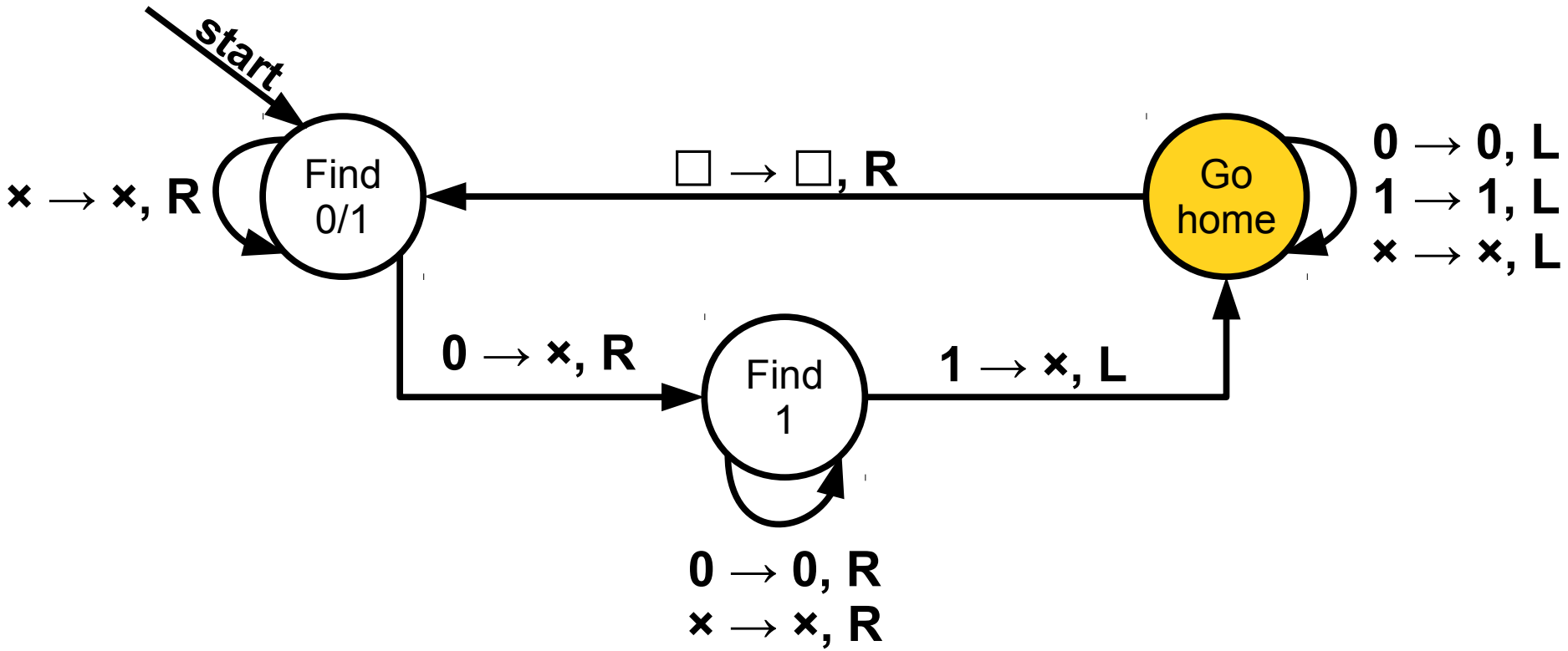
start
Find 0/1
× → ×, R
□ → □, R
Go home
0 → 0, L
1 → 1, L
× → ×, L
0 → ×, R
Find 1
1 → ×, L
0 → 0, R
× → ×, R

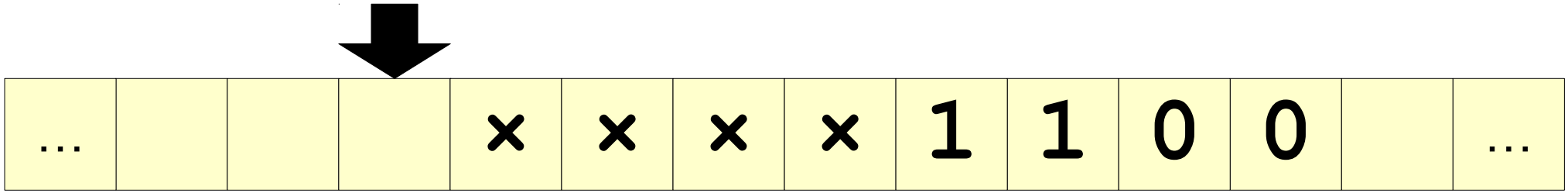
… × × × × 1 1 0 0 …

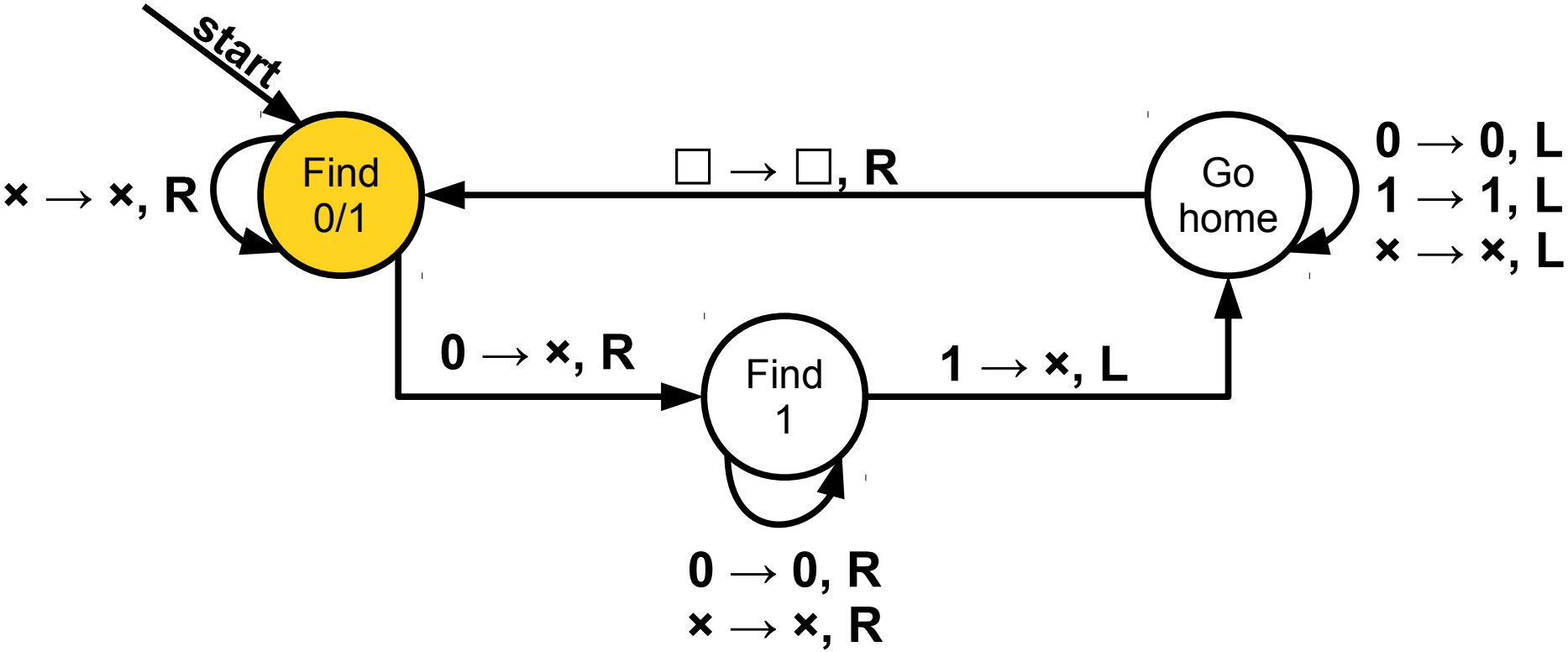
start
Find 0/1
× → ×, R
□ → □, R
Go home
0 → 0, L
1 → 1, L
× → ×, L
0 → ×, R
Find 1
1 → ×, L
0 → 0, R
× → ×, R

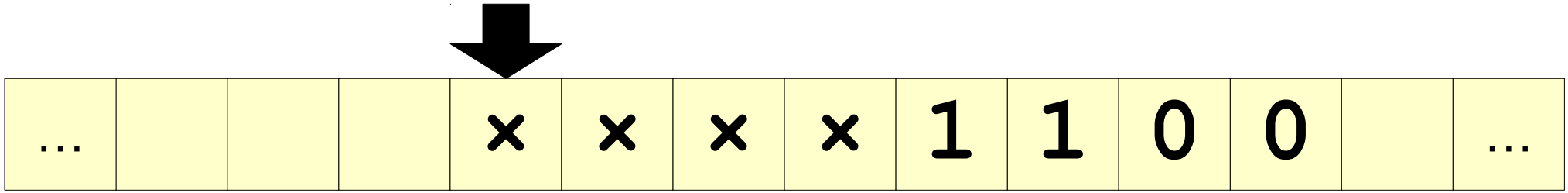
...
×
×
×
×
1
1
0
0
...

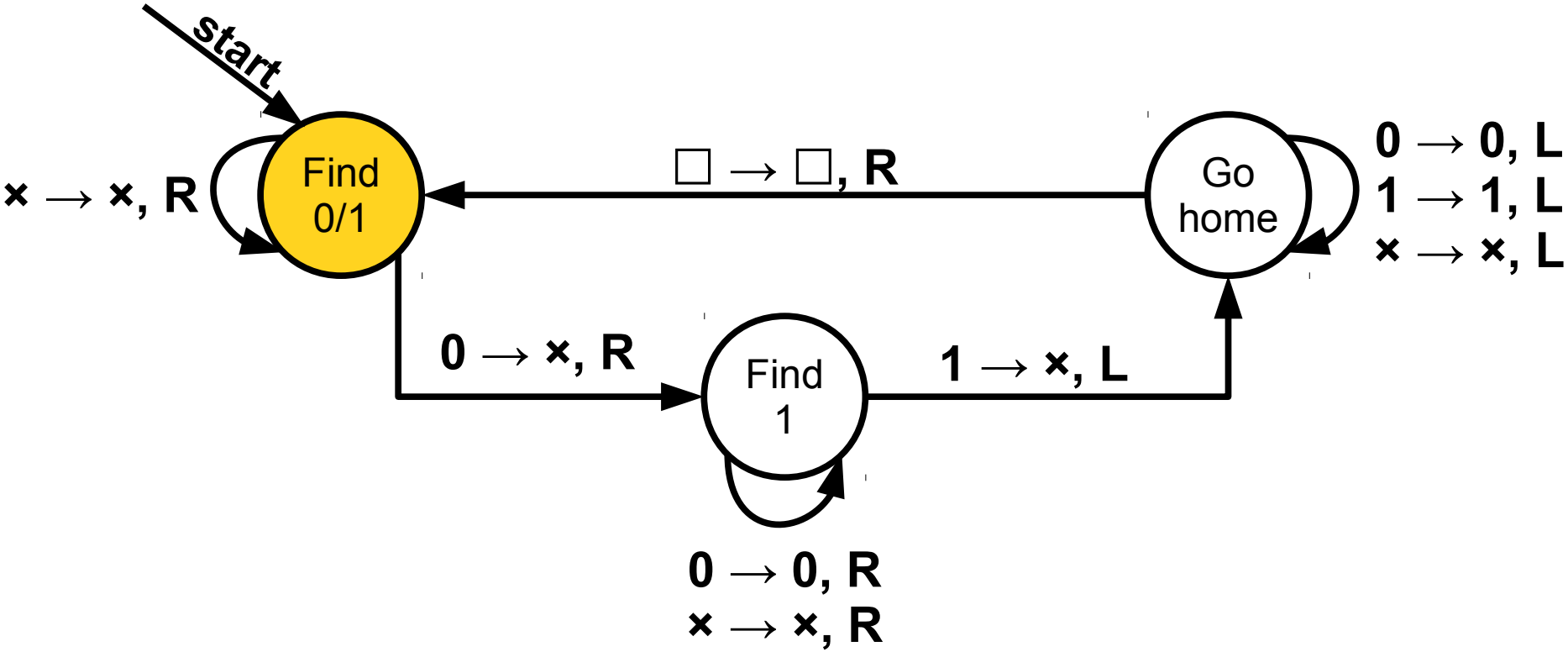
start
Find 0/1
× → ×, R
□ → □, R
Go home
0 → 0, L
1 → 1, L
× → ×, L
0 → ×, R
Find 1
1 → ×, L
0 → 0, R
× → ×, R

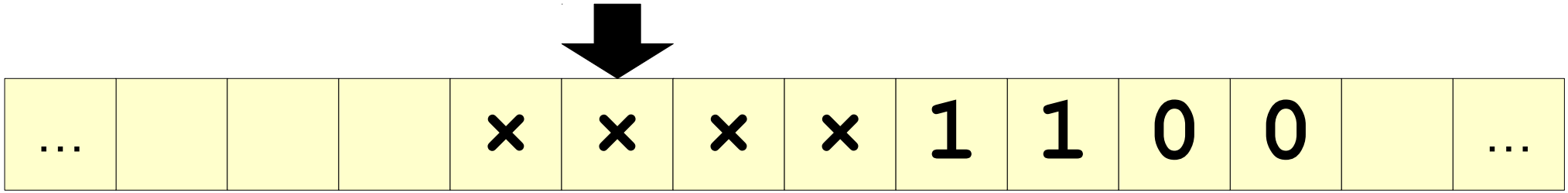
... × × × × 1 1 0 0 ...

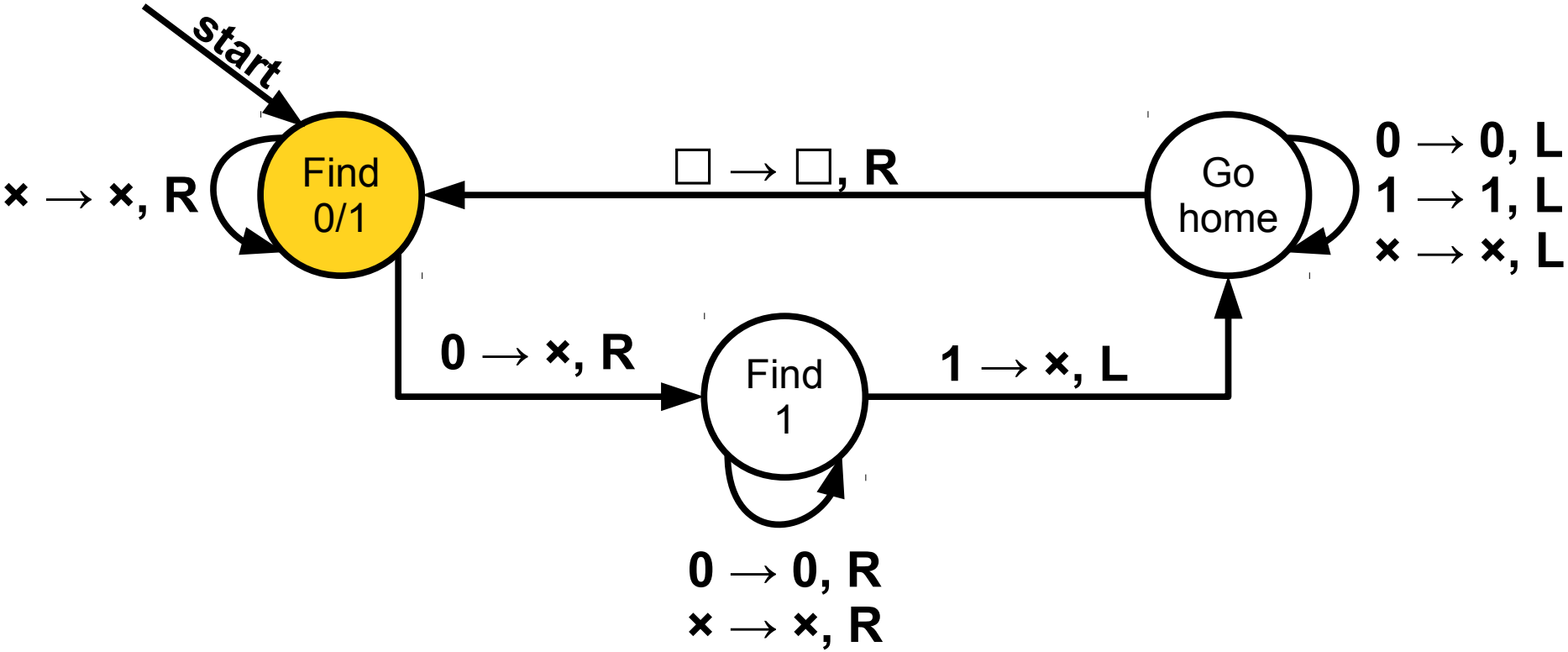
start
Find 0/1
× → ×, R
□ → □, R
Go home
0 → 0, L
1 → 1, L
× → ×, L
0 → ×, R
Find 1
1 → ×, L
0 → 0, R
× → ×, R

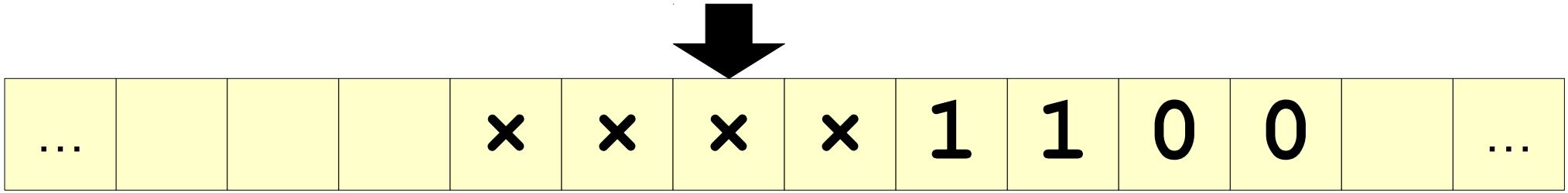
... × × × × 1 1 0 0 ...

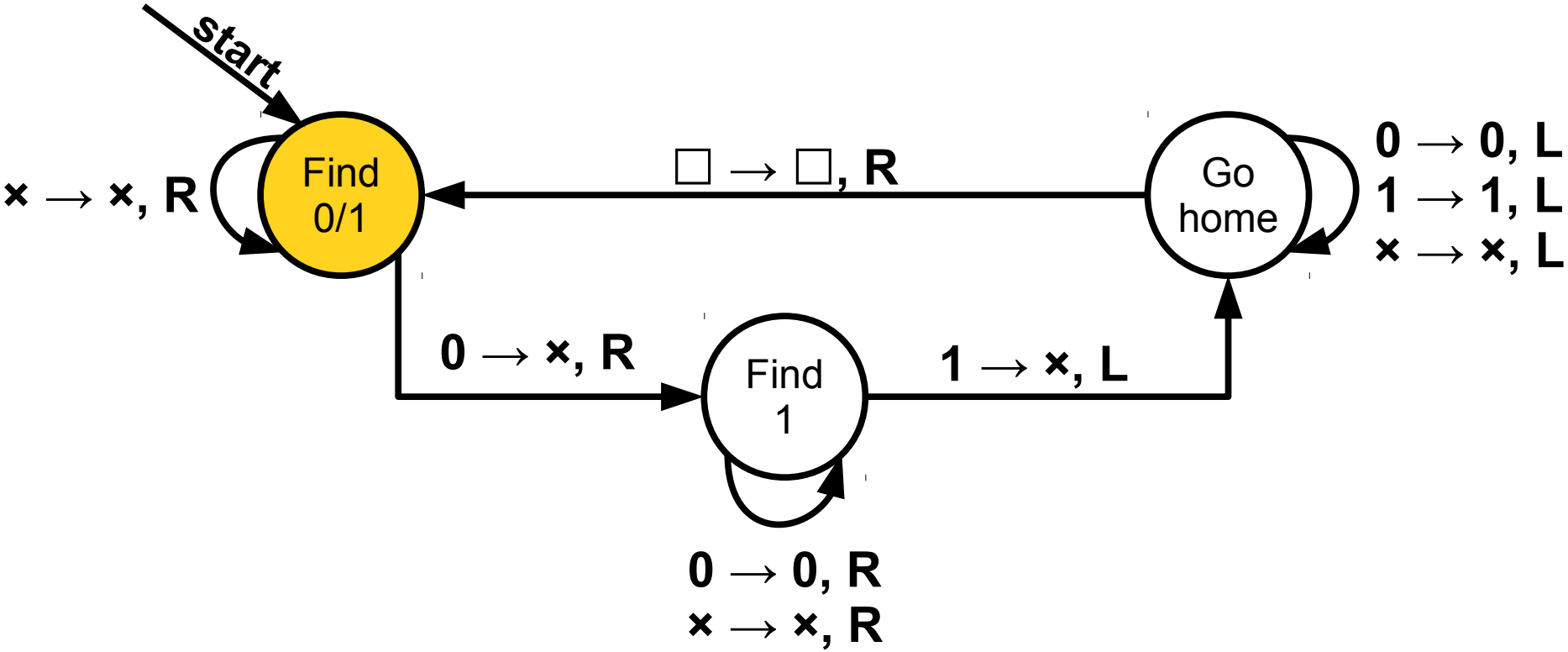
start
Find 0/1
× → ×, R
□ → □, R
Go home
0 → 0, L
1 → 1, L
× → ×, L
0 → ×, R
Find 1
1 → ×, L
0 → 0, R
× → ×, R

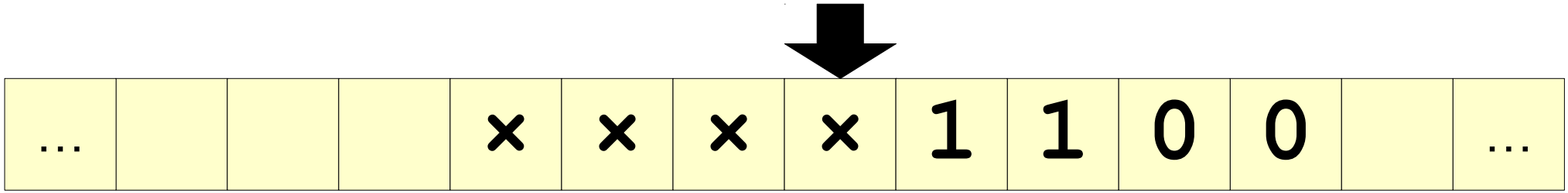
... × × × × 1 1 0 0 ...

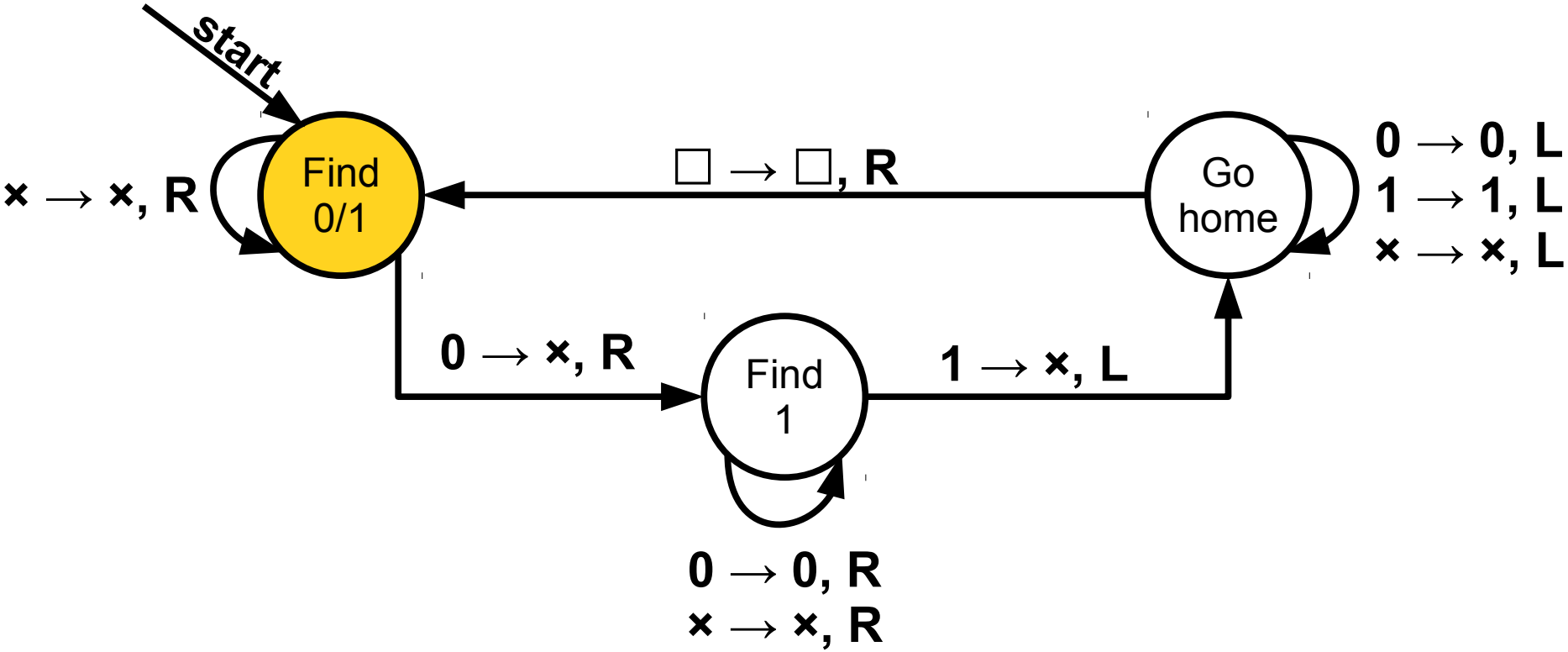
start
Find 0/1
× → ×, R
□ → □, R
Go home
0 → 0, L
1 → 1, L
× → ×, L
0 → ×, R
Find 1
1 → ×, L
0 → 0, R
× → ×, R

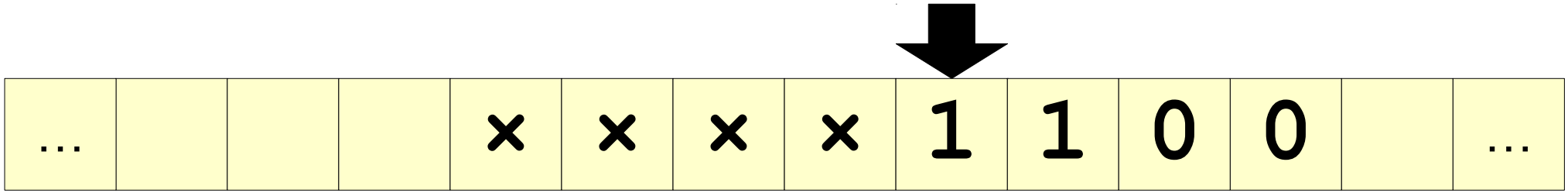
... × × × × 1 1 0 0 ...

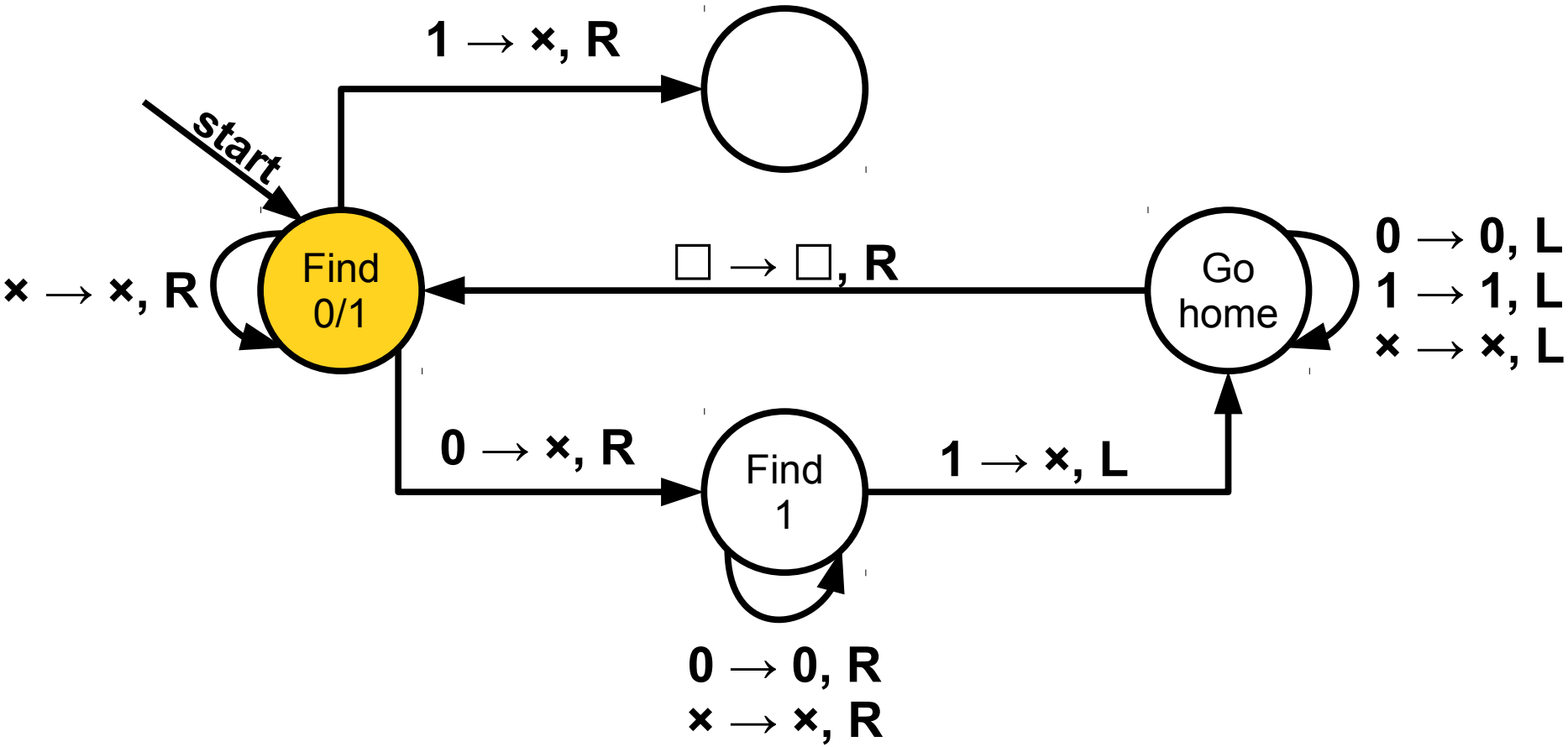
start
Find 0/1
1 → ×, R
× → ×, R
0 → ×, R
Find 1
0 → 0, R
× → ×, R
1 → ×, L
Go home
□ → □, R
0 → 0, L
1 → 1, L
× → ×, L

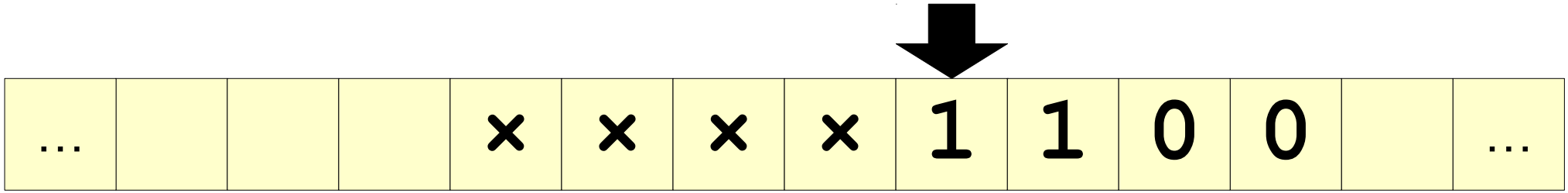
... × × × × 1 1 0 0 ...

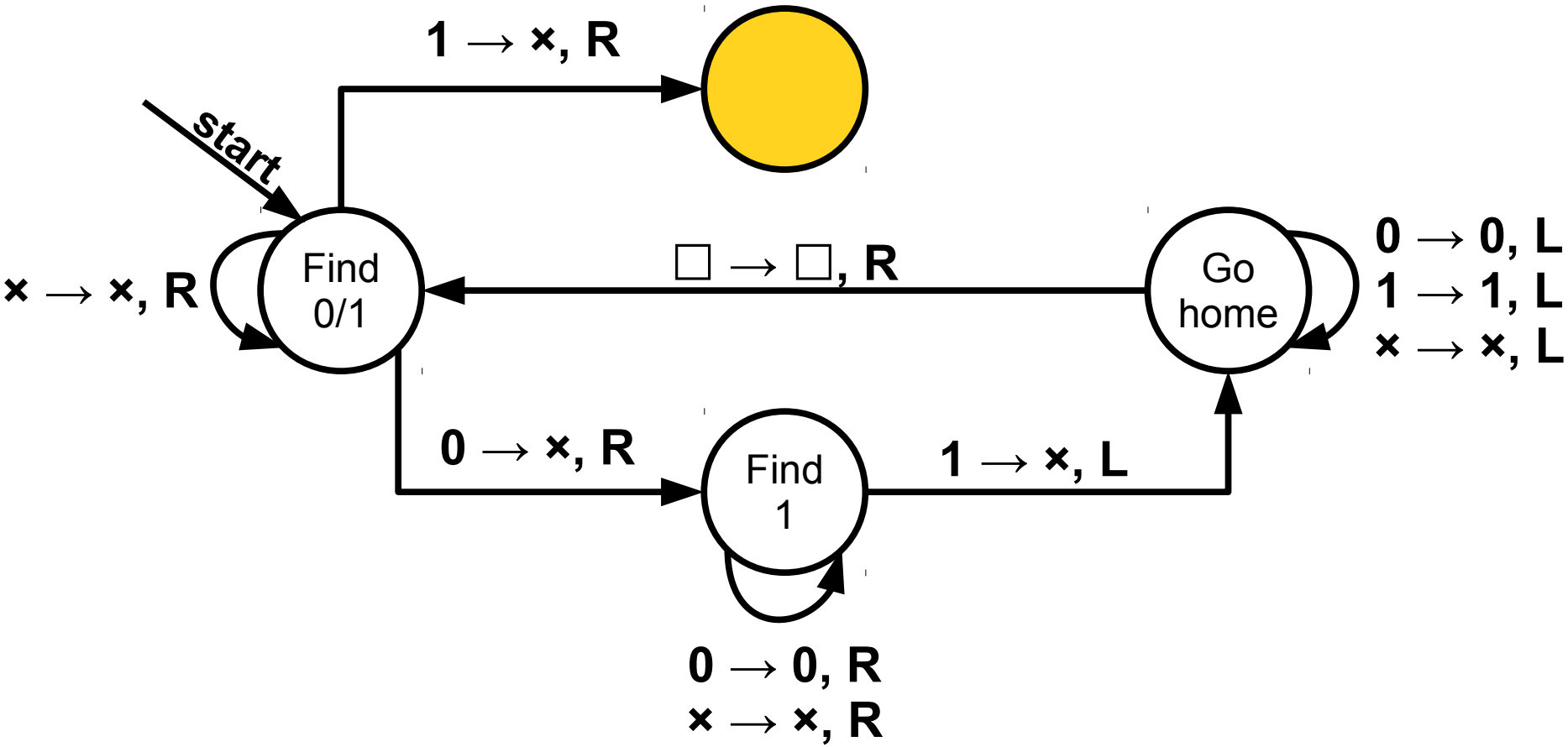

…				×	×	×	×	×	1	0	0		…

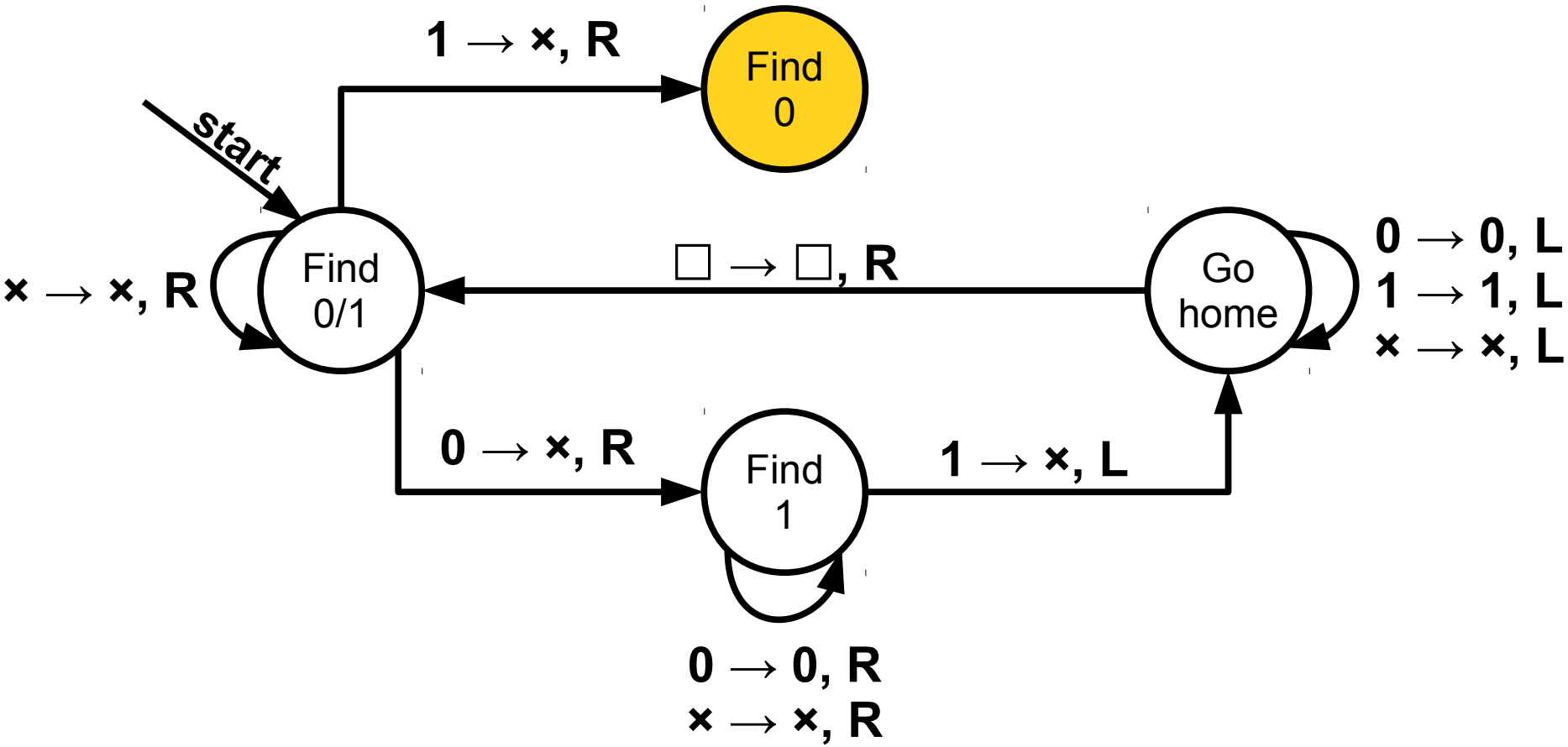
start
Find 0/1
1 → ×, R
Find 0
× → ×, R
0 → ×, R
Find 1
0 → 0, R
× → ×, R
1 → ×, L
Go home
□ → □, R
0 → 0, L
1 → 1, L
× → ×, L

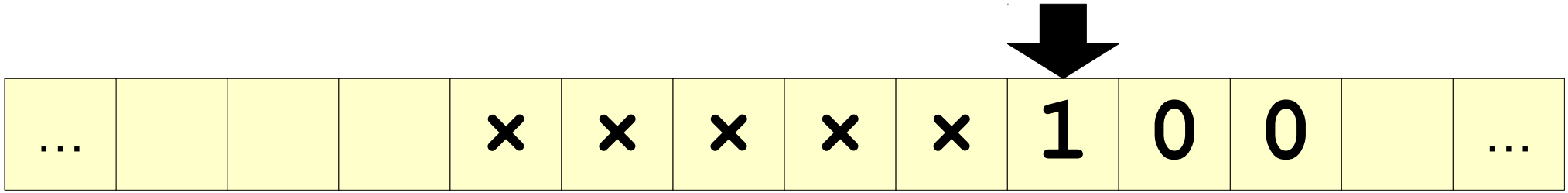
... × × × × × 1 0 0 ...

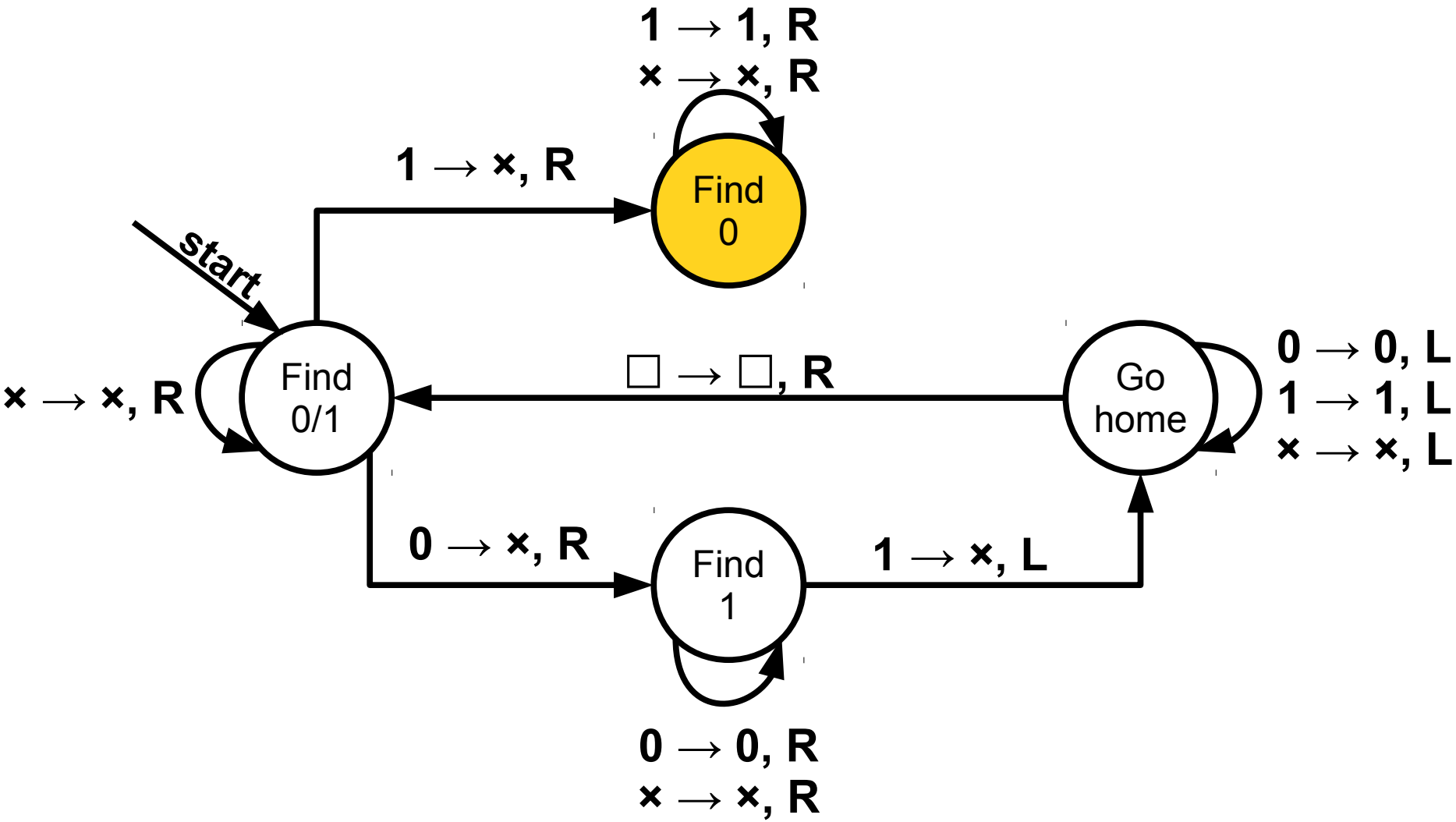
1 → 1, R
× → ×, R
1 → ×, R
Find 0
start
× → ×, R
Find 0/1
□ → □, R
Go home
0 → 0, L
1 → 1, L
× → ×, L
0 → ×, R
Find 1
1 → ×, L
0 → 0, R
× → ×, R

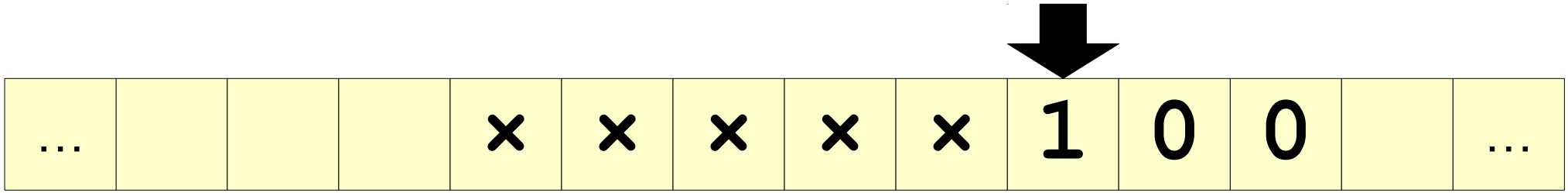
...
×
×
×
×
×
1
0
0
...

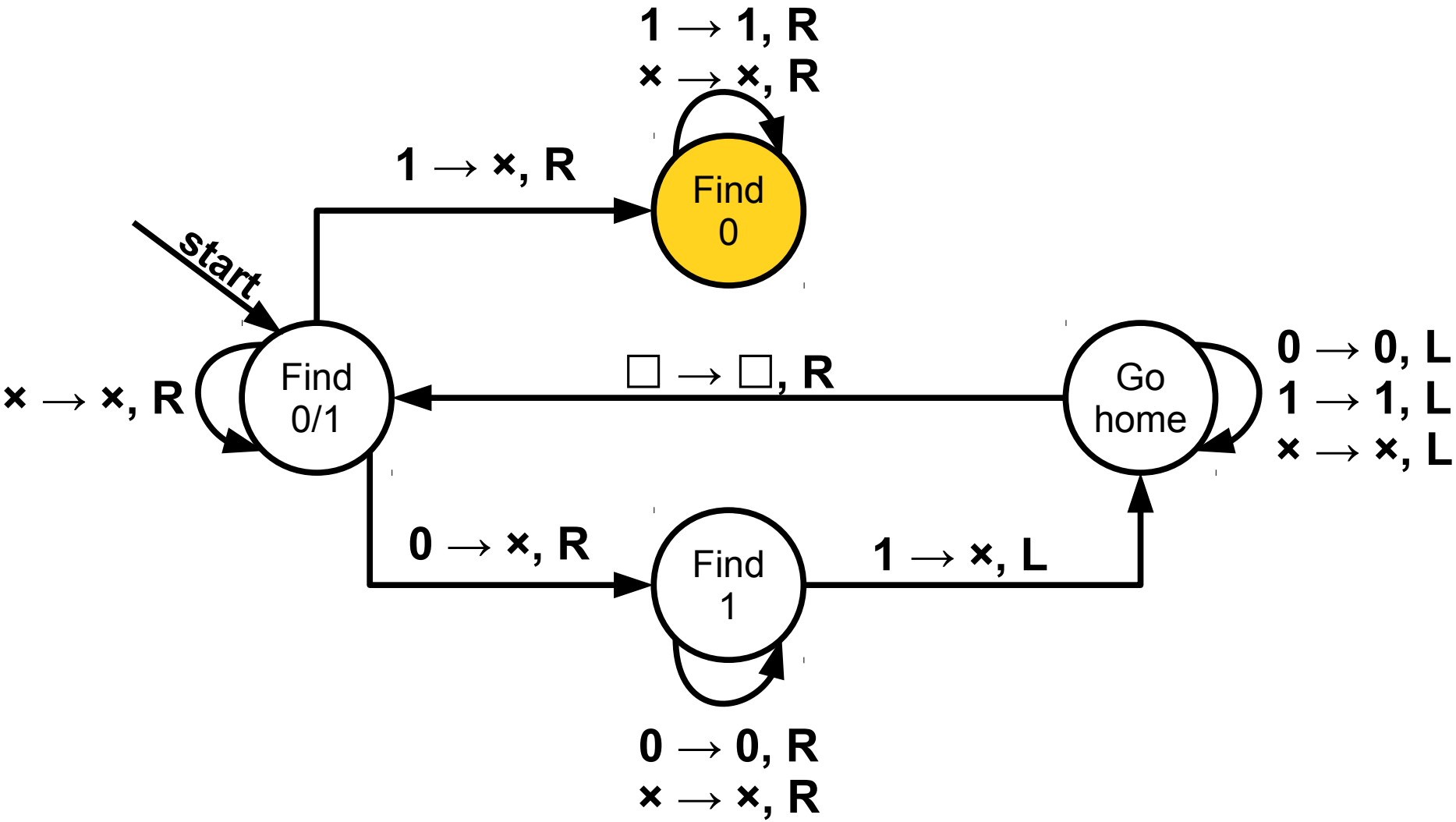
1 → 1, R
× → ×, R
1 → ×, R
Find 0
start
× → ×, R
Find 0/1
□ → □, R
Go home
0 → 0, L
1 → 1, L
× → ×, L
0 → ×, R
Find 1
1 → ×, L
0 → 0, R
× → ×, R

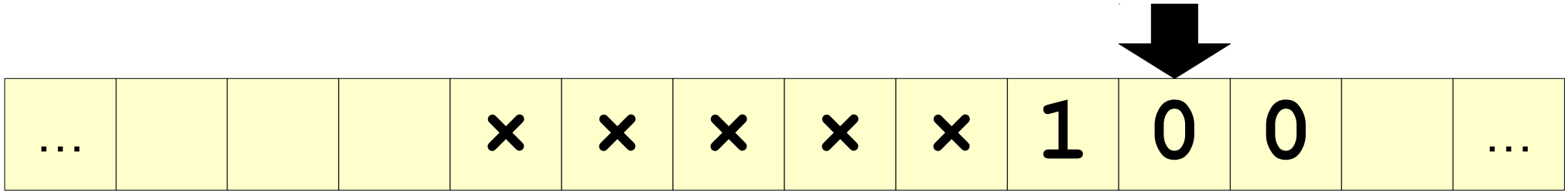
... × × × × × 1 0 0 ...

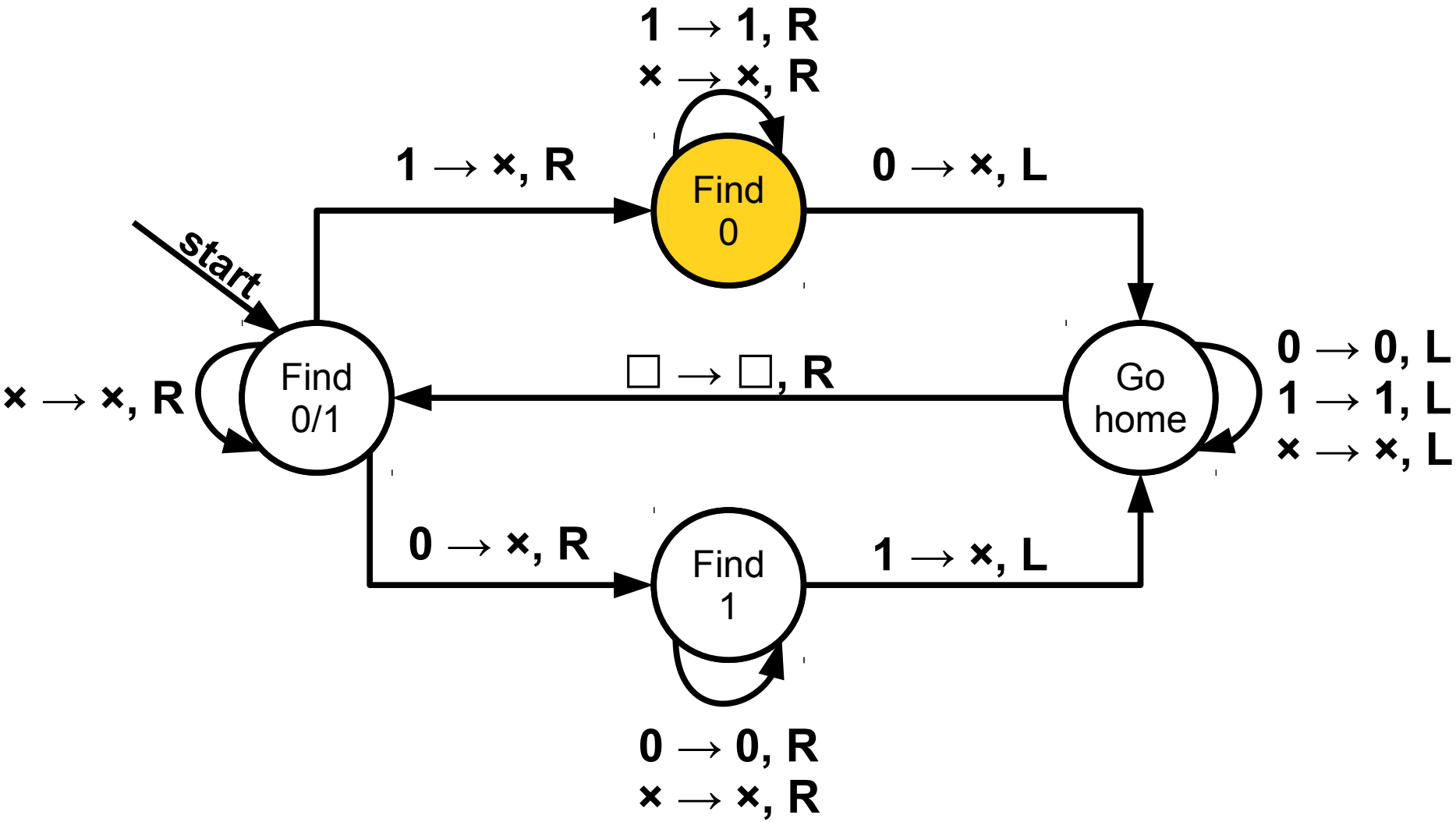
1 → 1, R
× → ×, R
1 → ×, R
Find 0
0 → ×, L
start
× → ×, R
Find 0/1
□ → □, R
Go home
0 → 0, L
1 → 1, L
× → ×, L
0 → ×, R
Find 1
1 → ×, L
0 → 0, R
× → ×, R

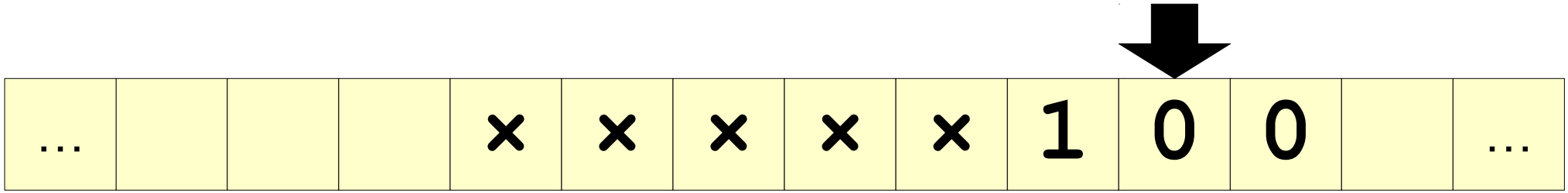
... × × × × × 1 0 0 ...

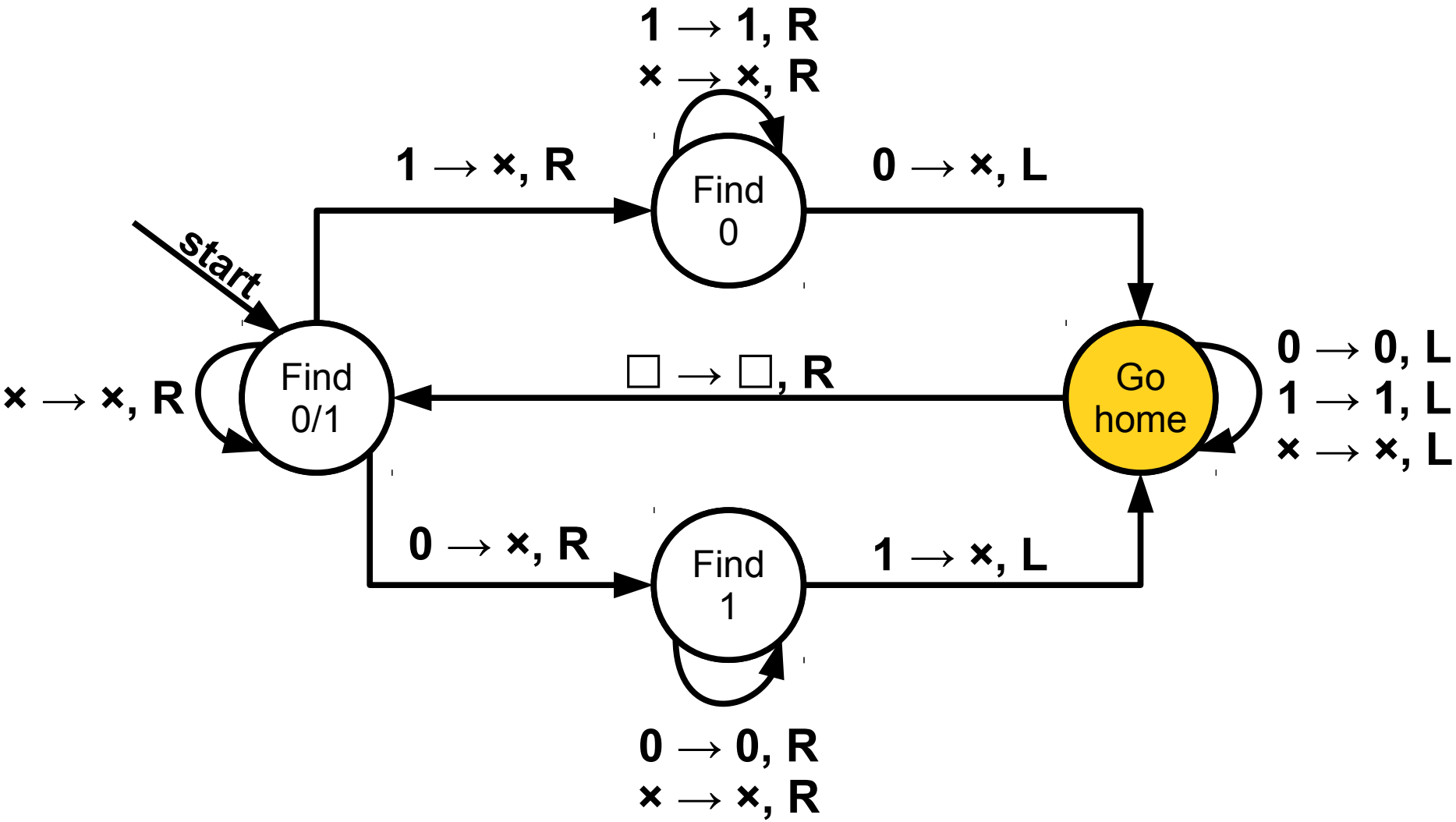
1 → 1, R
× → ×, R
1 → ×, R
0 → ×, L
start
Find 0
Find 0/1
× → ×, R
□ → □, R
Go home
0 → 0, L
1 → 1, L
× → ×, L
0 → ×, R
Find 1
1 → ×, L
0 → 0, R
× → ×, R

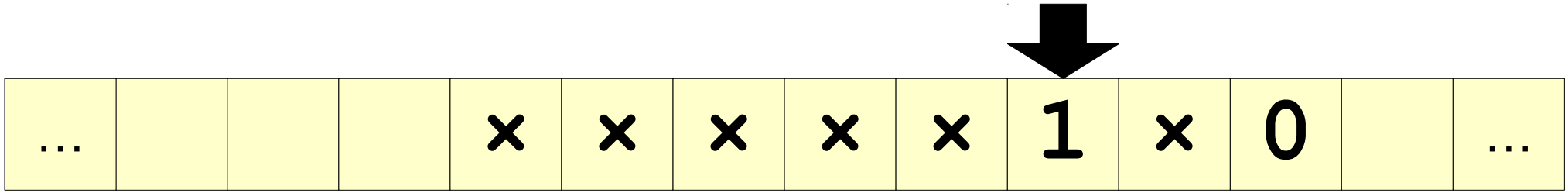
… × × × × × 1 × 0 …

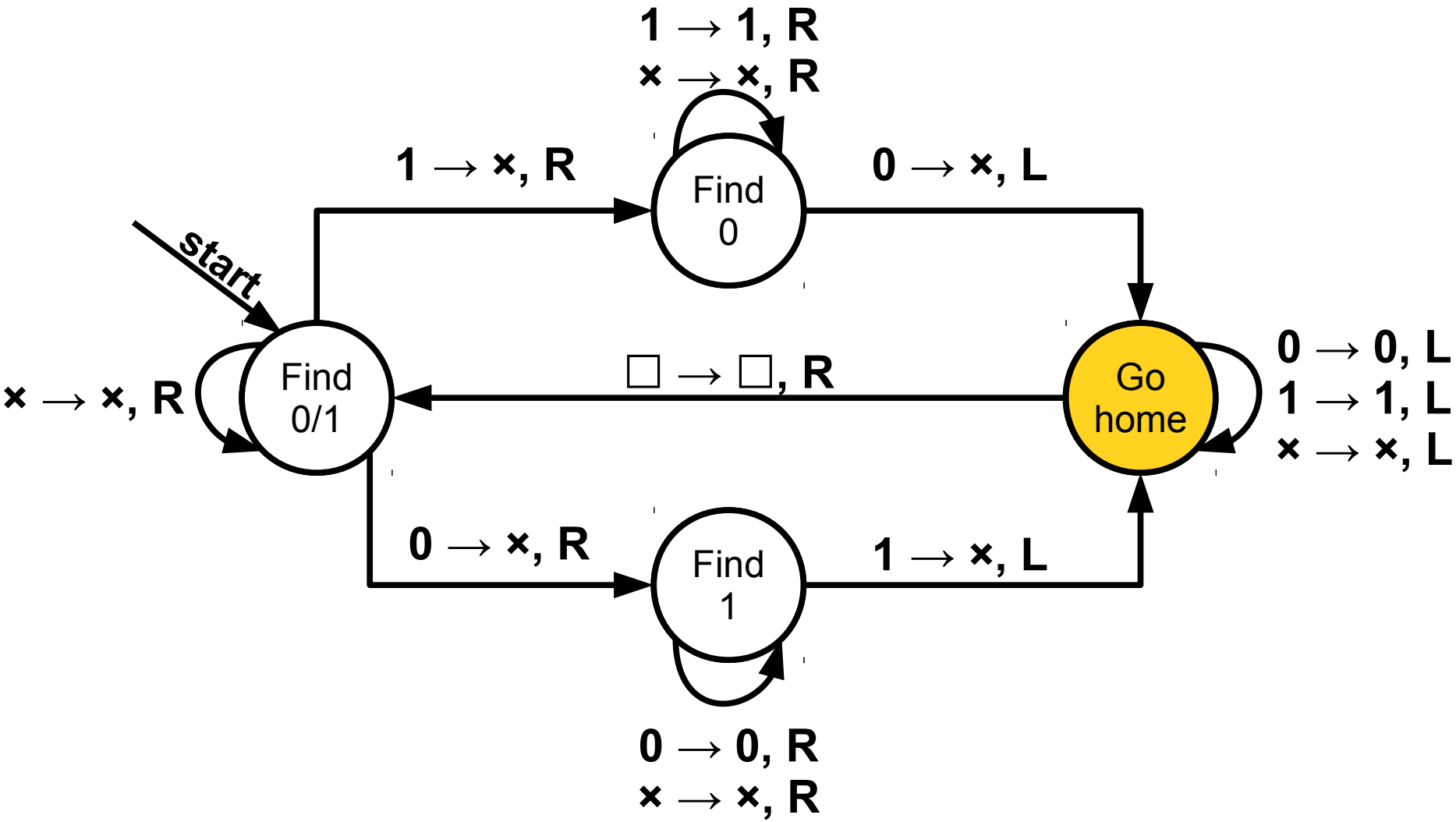
1 → 1, R
× → ×, R
1 → ×, R
0 → ×, L
start
Find 0
Find 0/1
× → ×, R
□ → □, R
Go home
0 → 0, L
1 → 1, L
× → ×, L
0 → ×, R
Find 1
1 → ×, L
0 → 0, R
× → ×, R

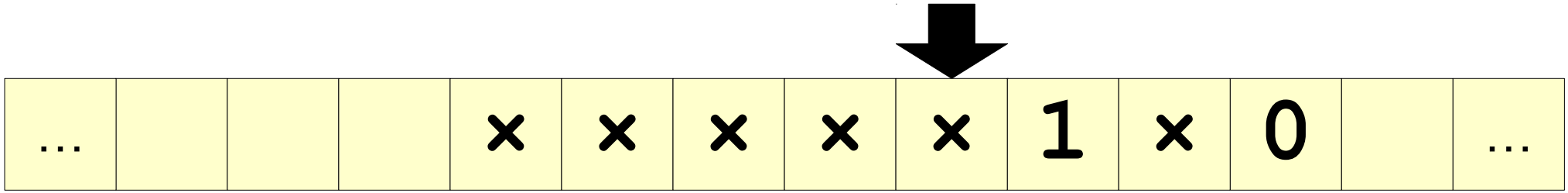
... × × × × × 1 × 0 ...

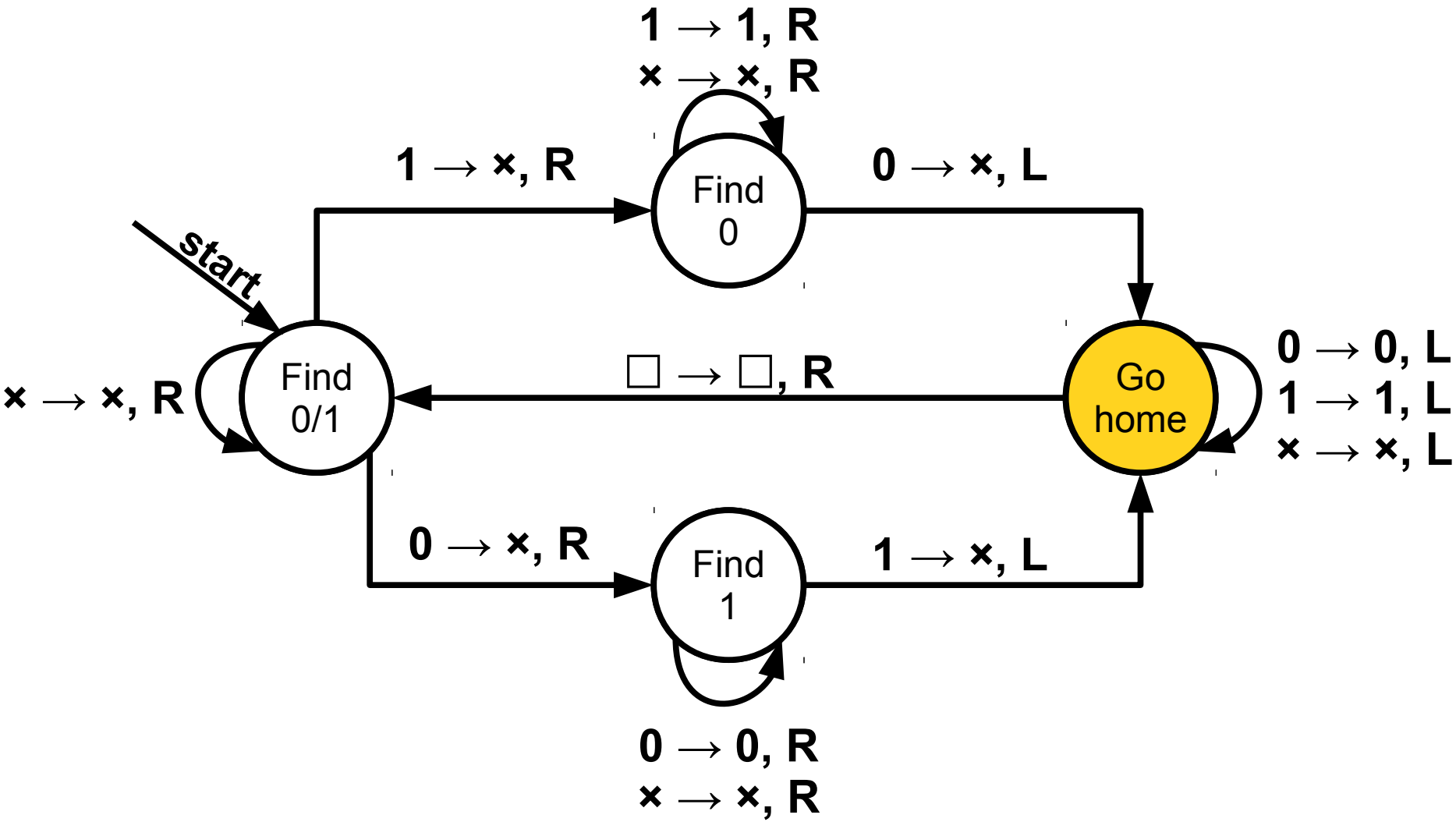
1 → 1, R
× → ×, R
1 → ×, R
Find 0
0 → ×, L
start
× → ×, R
Find 0/1
□ → □, R
Go home
0 → 0, L
1 → 1, L
× → ×, L
0 → ×, R
Find 1
1 → ×, L
0 → 0, R
× → ×, R

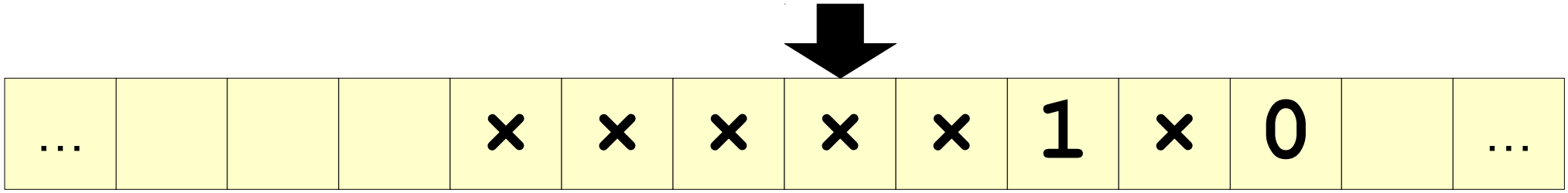
... × × × × × 1 × 0 ...

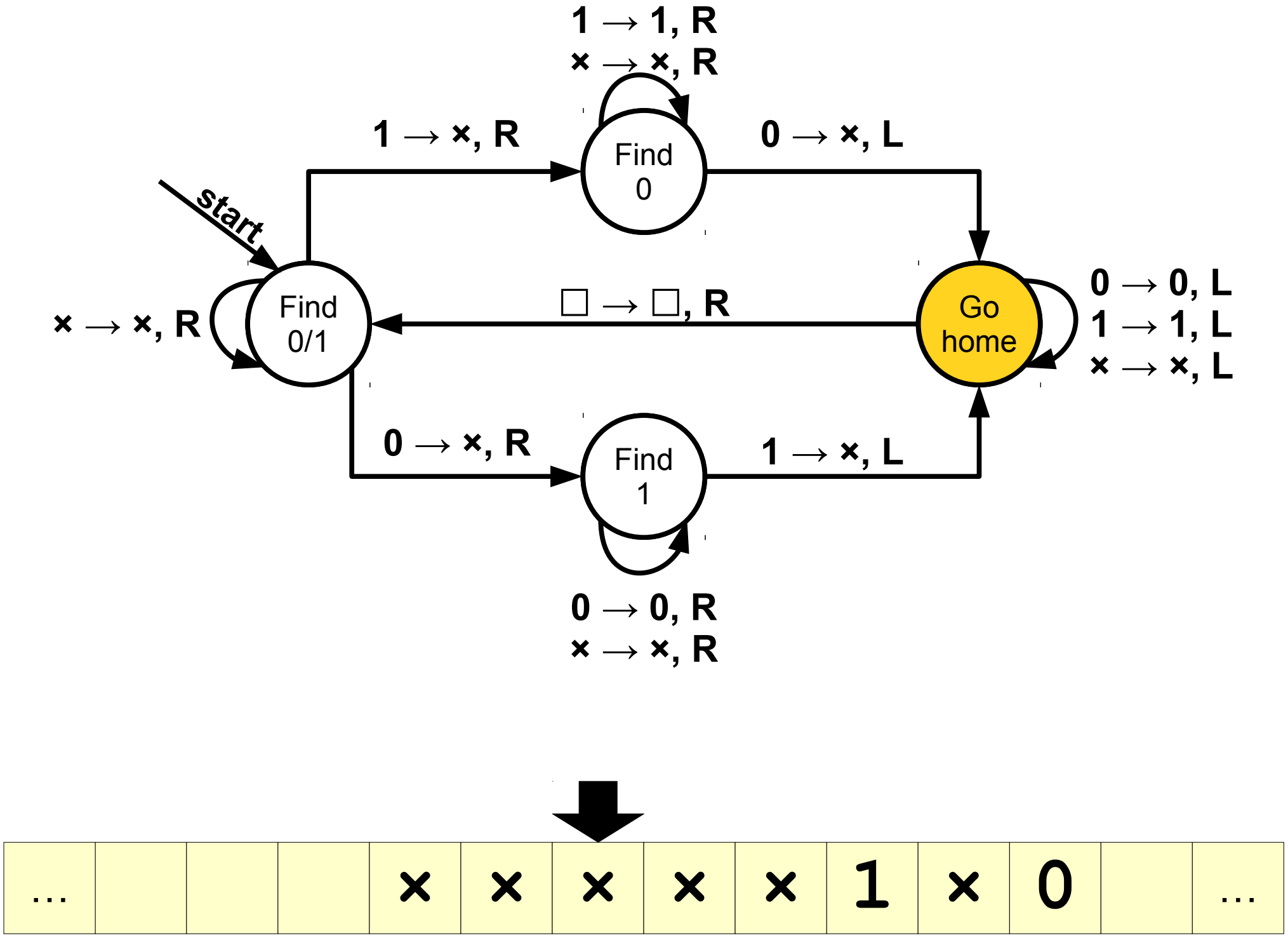
1 → 1, R
× → ×, R
1 → ×, R
0 → ×, L
start
Find 0
Find 0/1
× → ×, R
□ → □, R
Go home
0 → 0, L
1 → 1, L
× → ×, L
0 → ×, R
Find 1
1 → ×, L
0 → 0, R
× → ×, R
...
×
×
×
×
×
1
×
0
...

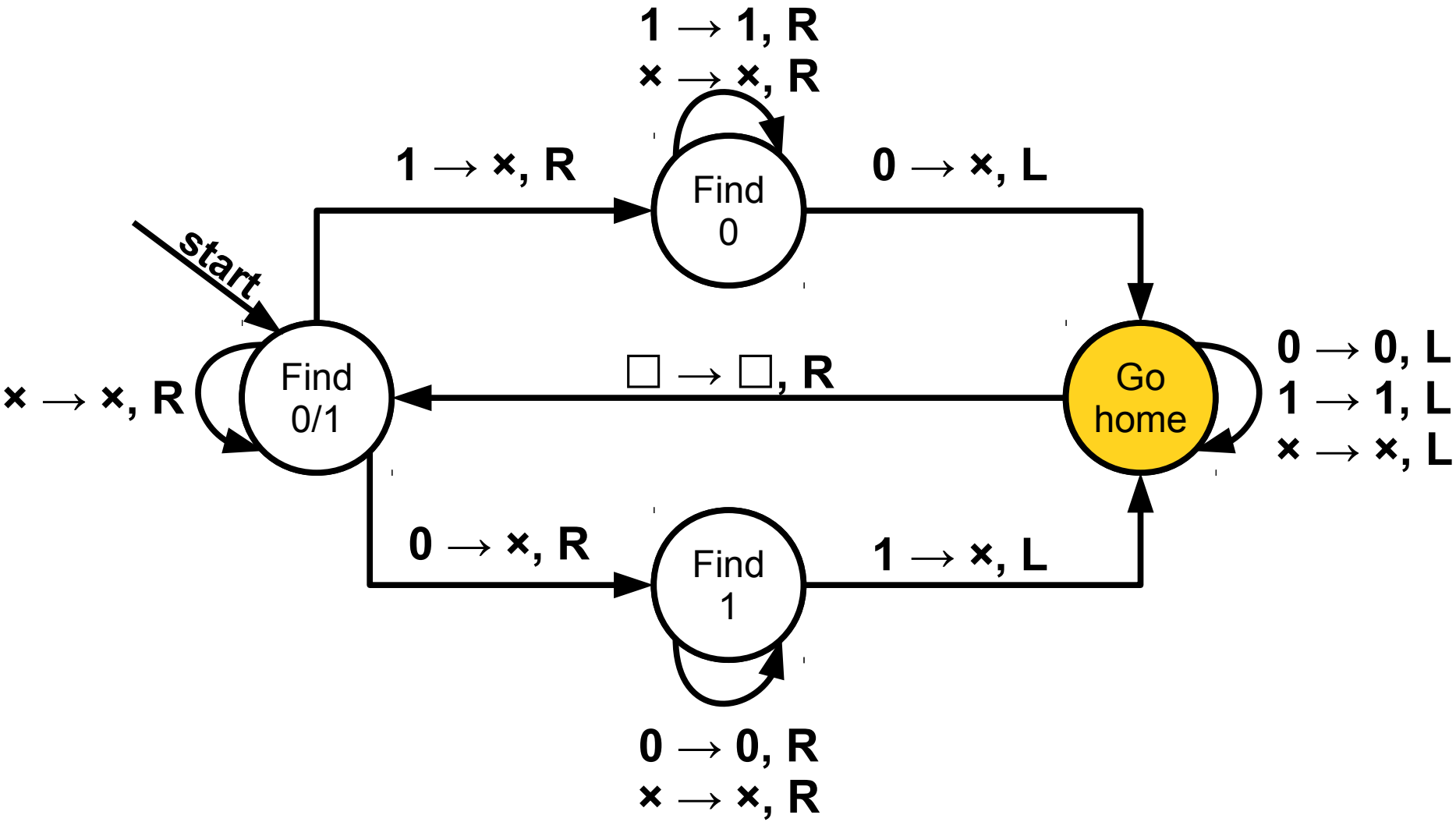
1 → 1, R
× → ×, R
1 → ×, R
Find 0
0 → ×, L
start
× → ×, R
Find 0/1
□ → □, R
Go home
0 → 0, L
1 → 1, L
× → ×, L
0 → ×, R
Find 1
1 → ×, L
0 → 0, R
× → ×, R

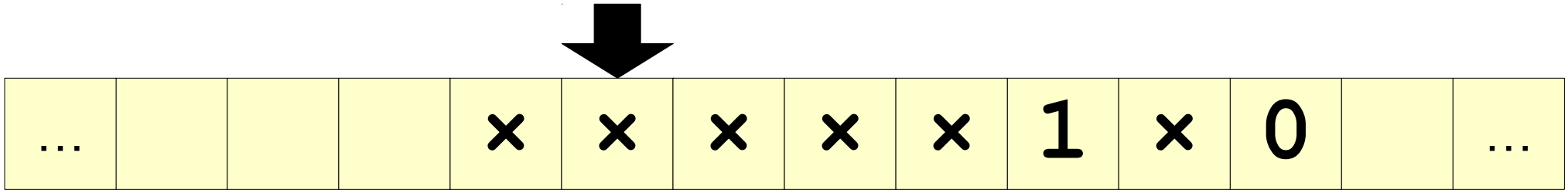
... × × × × × 1 × 0 ...

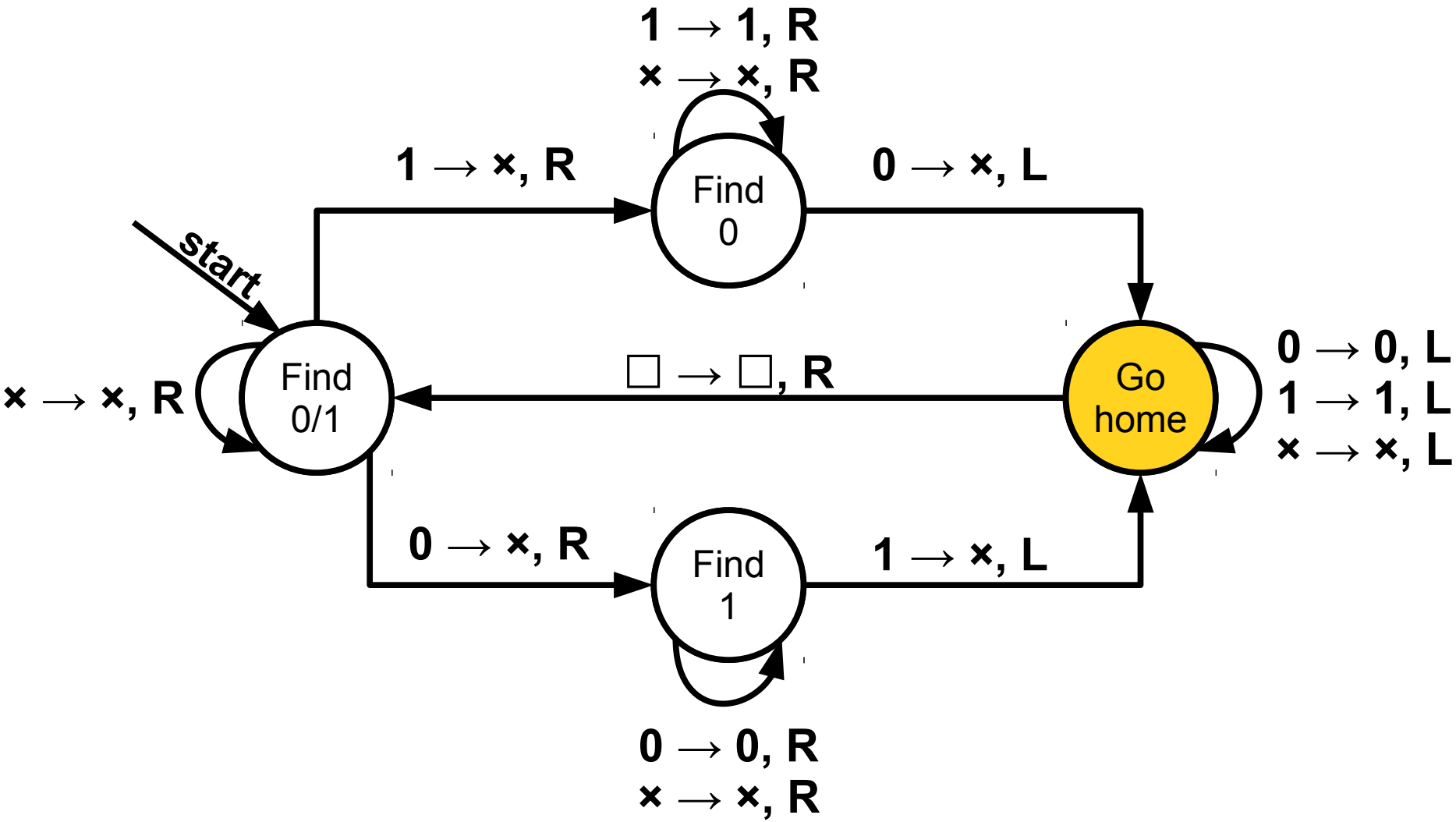
1 → 1, R
× → ×, R
1 → ×, R
Find 0
0 → ×, L
start
× → ×, R
Find 0/1
□ → □, R
Go home
0 → 0, L
1 → 1, L
× → ×, L
0 → ×, R
Find 1
1 → ×, L
0 → 0, R
× → ×, R

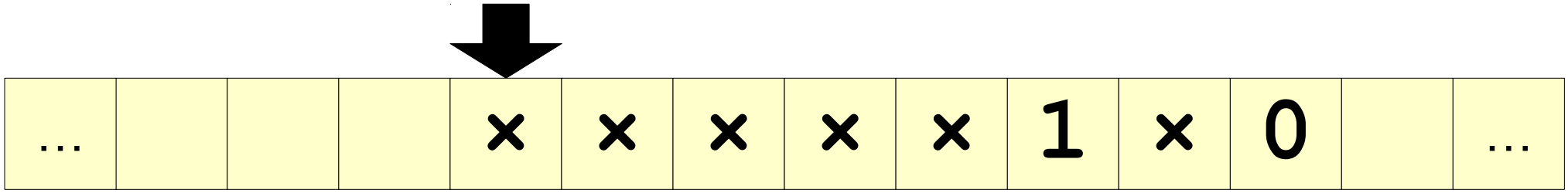
... × × × × × 1 × 0 ...

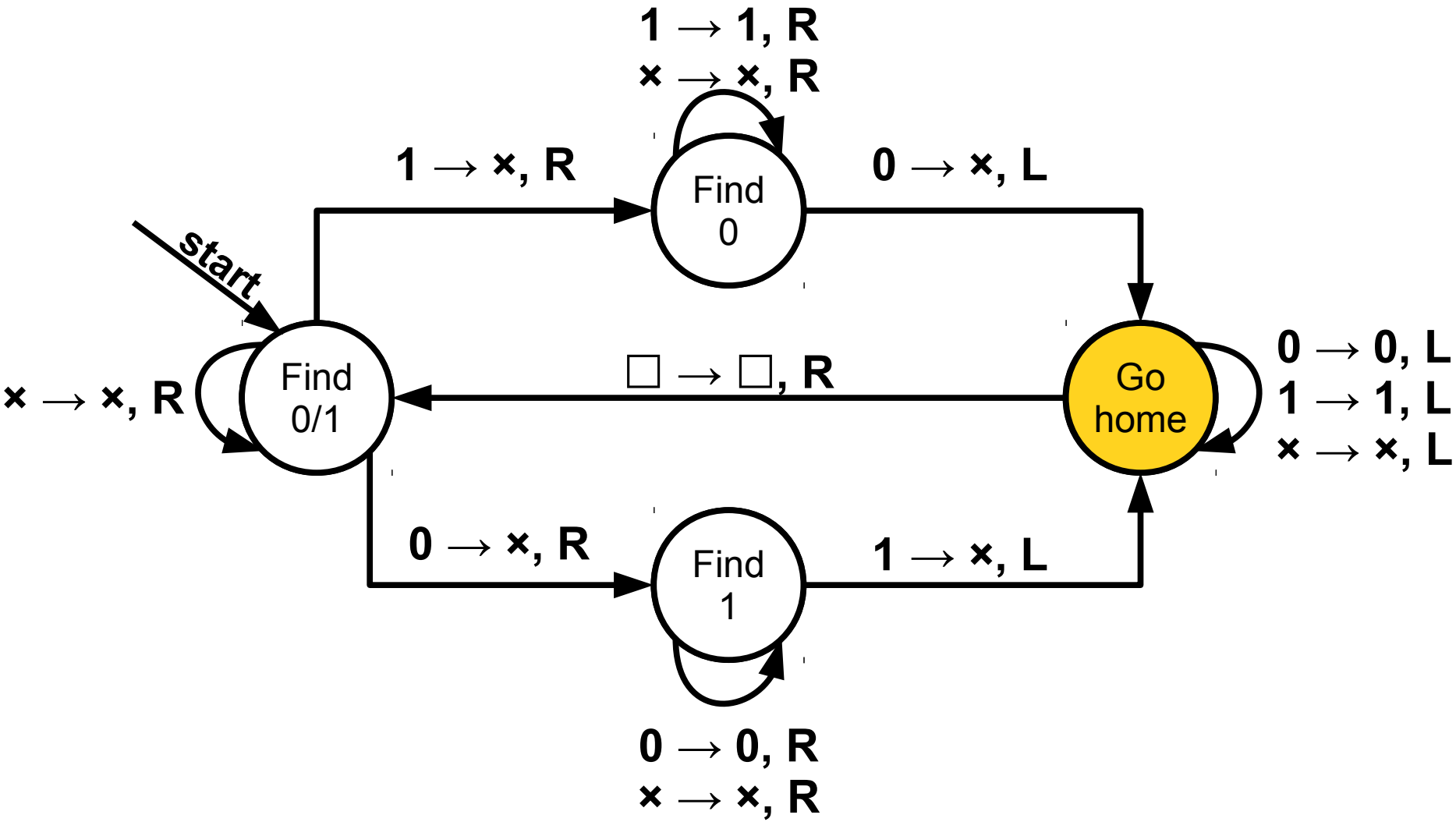
1 → 1, R
× → ×, R
1 → ×, R
Find 0
0 → ×, L
start
× → ×, R
Find 0/1
□ → □, R
Go home
0 → 0, L
1 → 1, L
× → ×, L
0 → ×, R
Find 1
1 → ×, L
0 → 0, R
× → ×, R

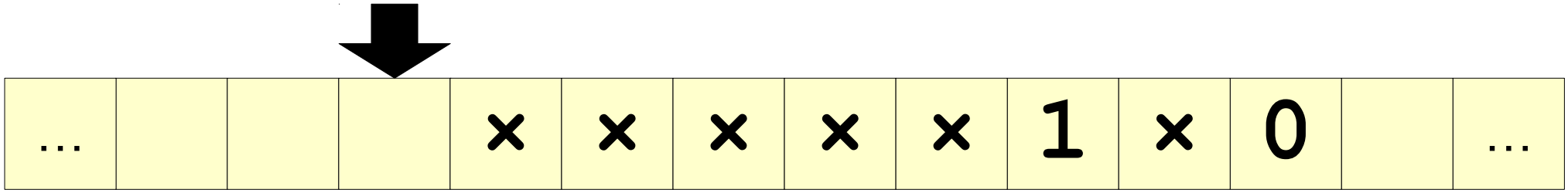
... × × × × × 1 × 0 ...

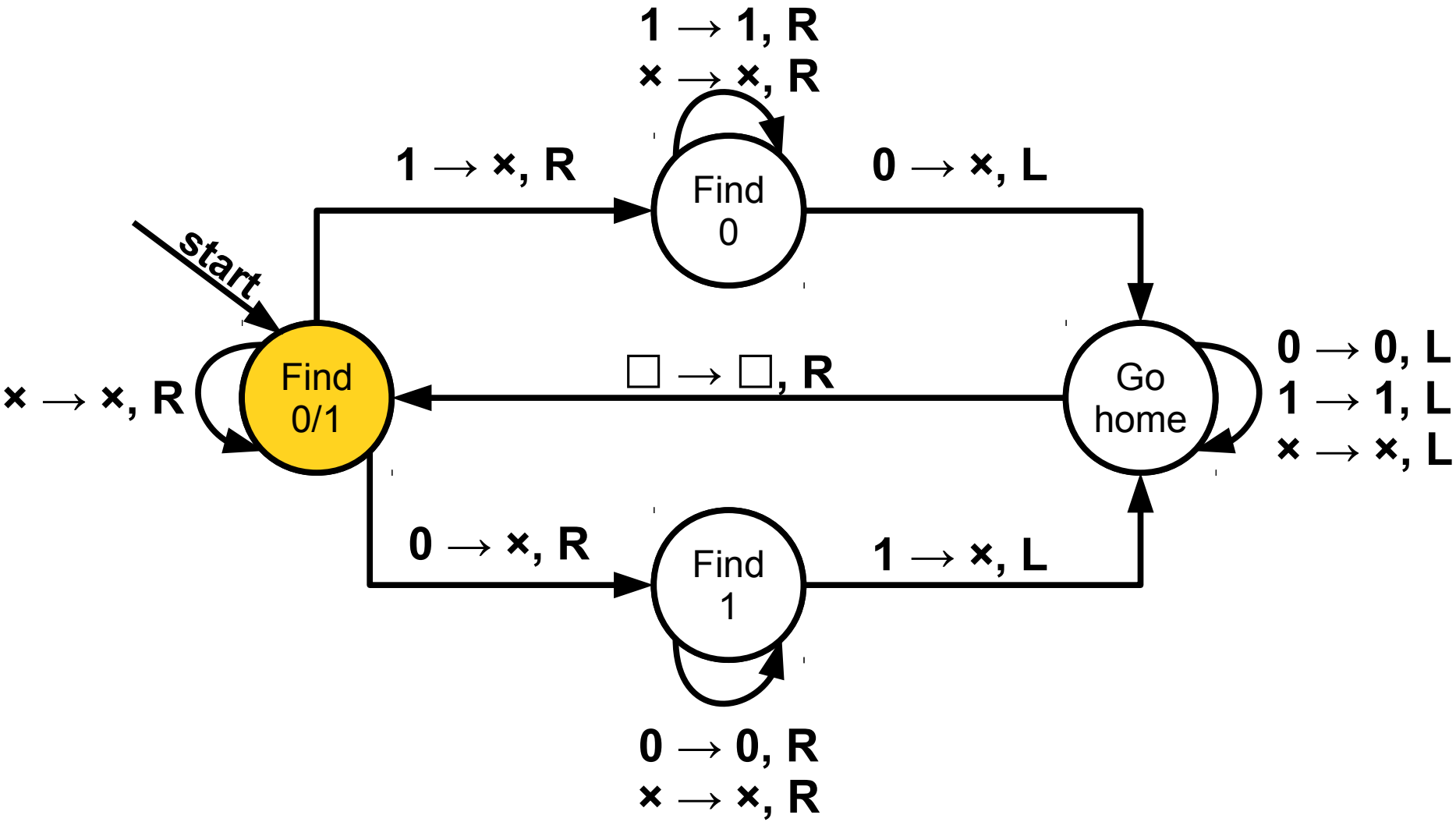
1 → 1, R
× → ×, R
1 → ×, R
Find 0
0 → ×, L
start
× → ×, R
Find 0/1
□ → □, R
Go home
0 → 0, L
1 → 1, L
× → ×, L
0 → ×, R
Find 1
1 → ×, L
0 → 0, R
× → ×, R

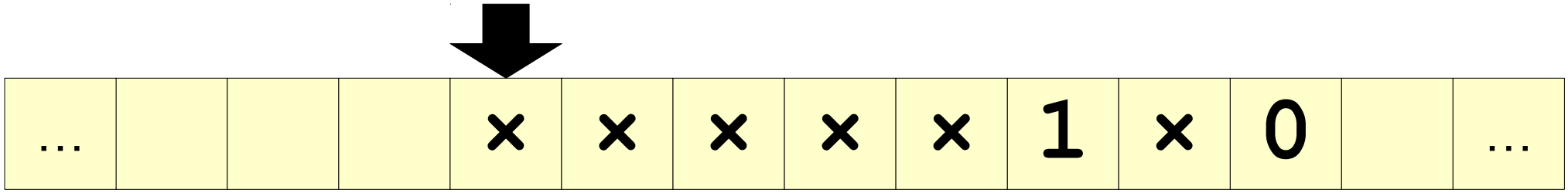
... × × × × × 1 × 0 ...

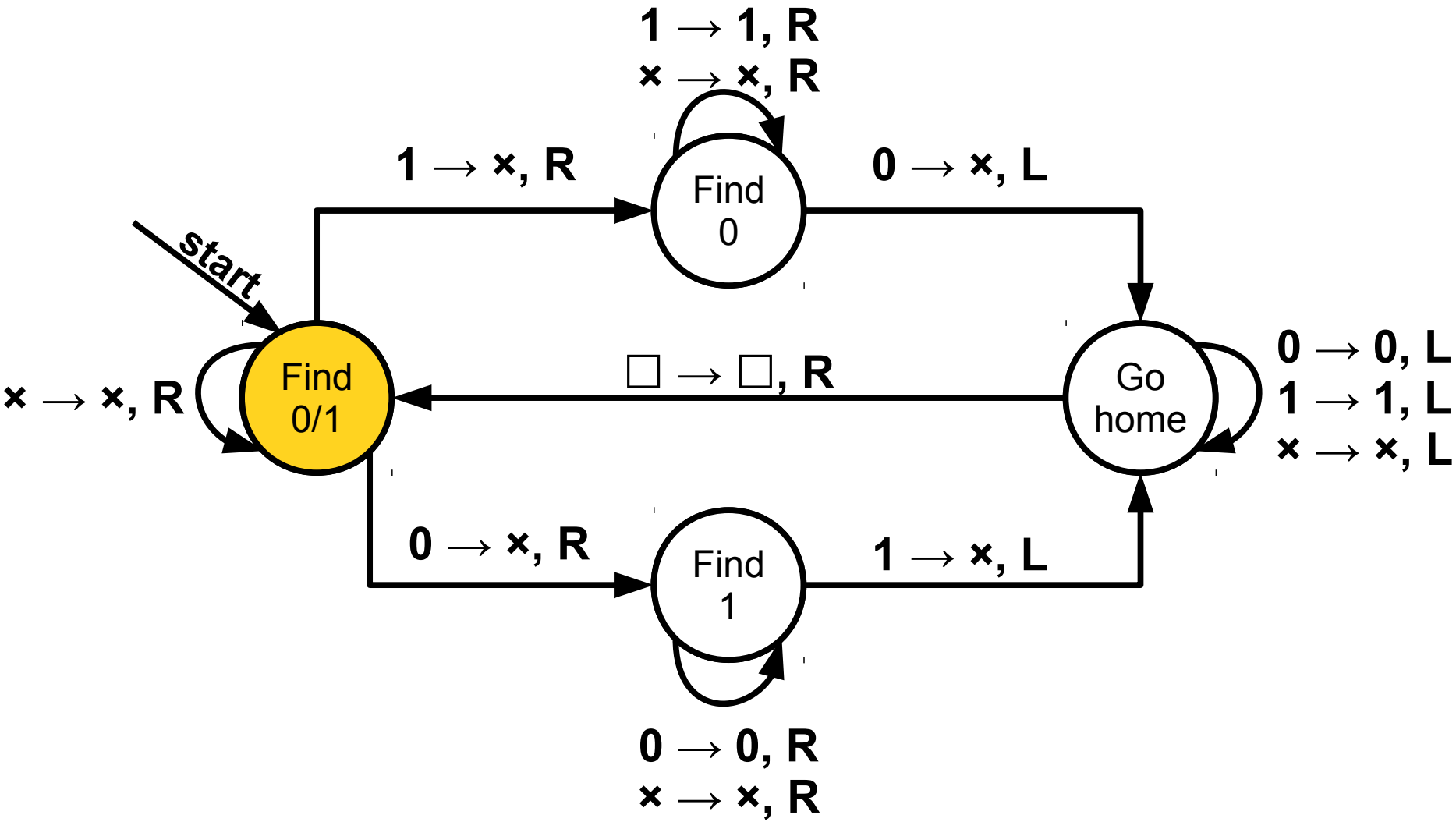
1 → 1, R
× → ×, R
1 → ×, R
Find 0
0 → ×, L
start
× → ×, R
Find 0/1
□ → □, R
Go home
0 → 0, L
1 → 1, L
× → ×, L
0 → ×, R
Find 1
1 → ×, L
0 → 0, R
× → ×, R

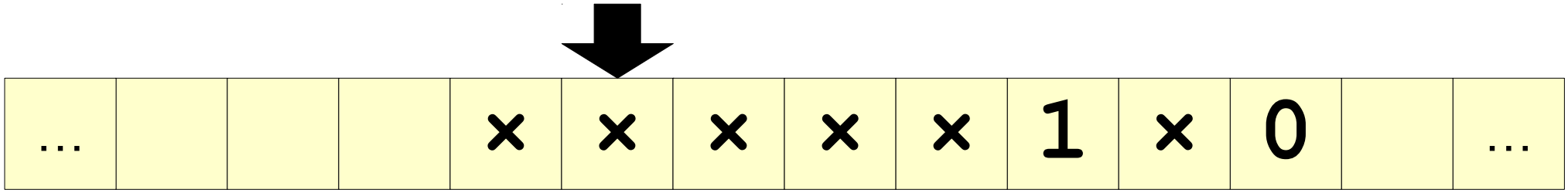
... × × × × × 1 × 0 ...

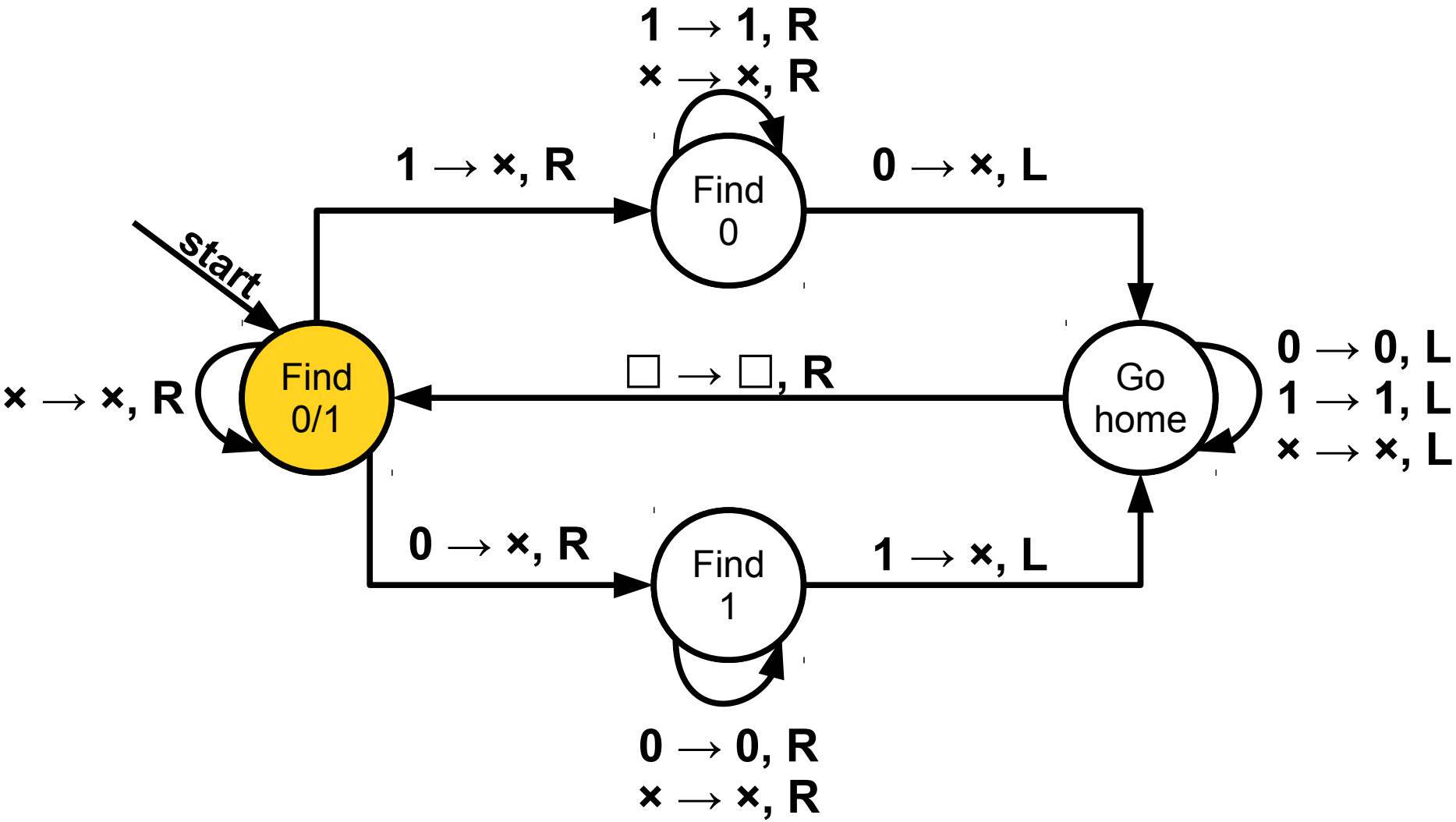
1 → 1, R
× → ×, R
1 → ×, R
Find 0
0 → ×, L
start
× → ×, R
Find 0/1
□ → □, R
Go home
0 → 0, L
1 → 1, L
× → ×, L
0 → ×, R
Find 1
1 → ×, L
0 → 0, R
× → ×, R

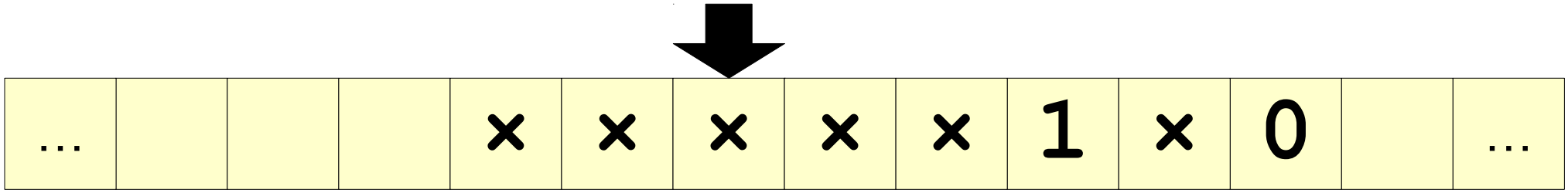
... × × × × × 1 × 0 ...

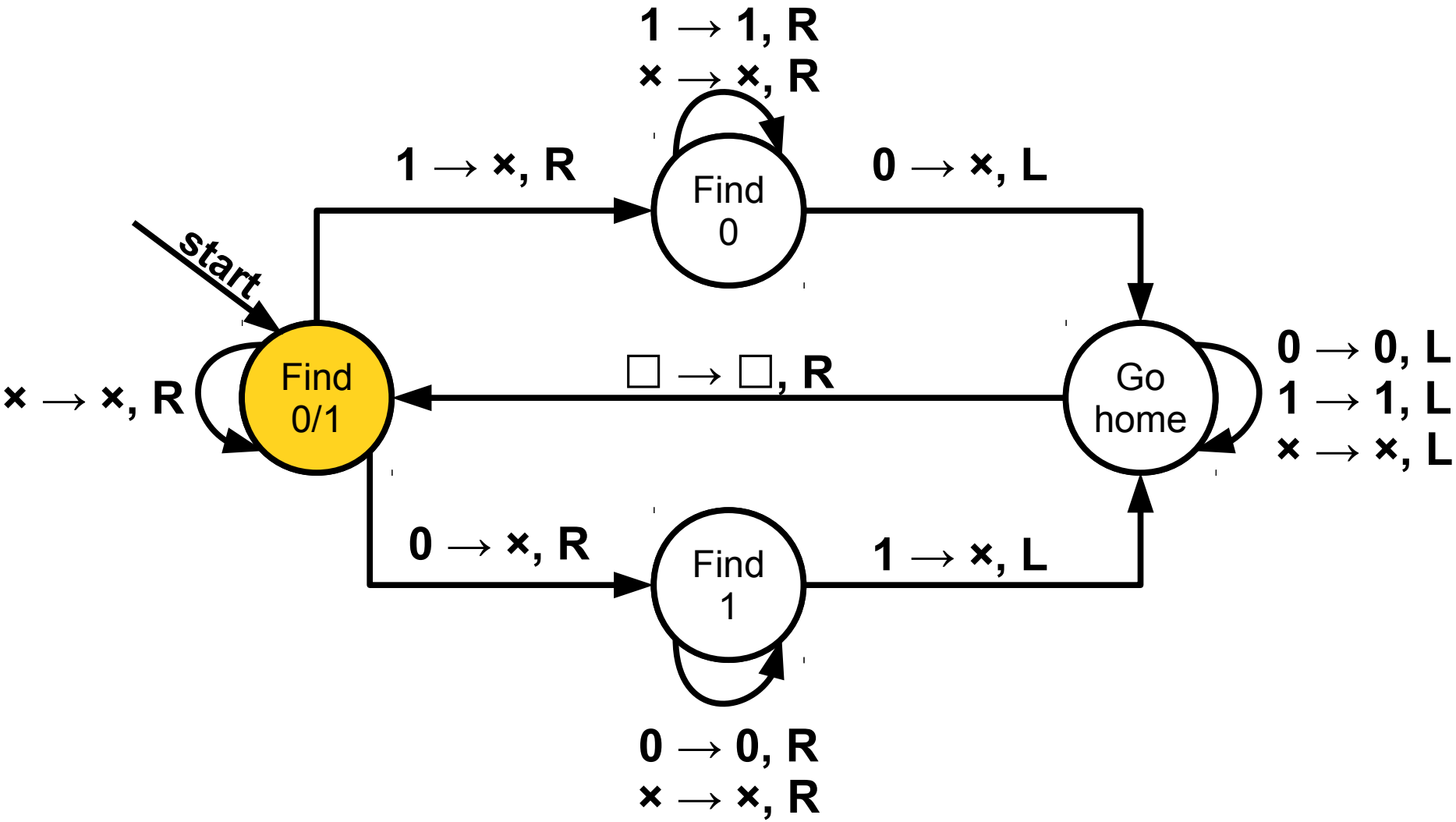
1 → 1, R
× → ×, R
1 → ×, R
Find 0
0 → ×, L
start
× → ×, R
Find 0/1
□ → □, R
Go home
0 → 0, L
1 → 1, L
× → ×, L
0 → ×, R
Find 1
1 → ×, L
0 → 0, R
× → ×, R

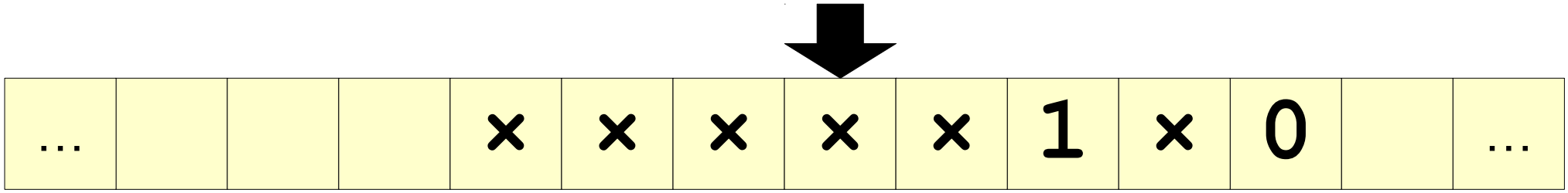
... × × × × × 1 × 0 ...

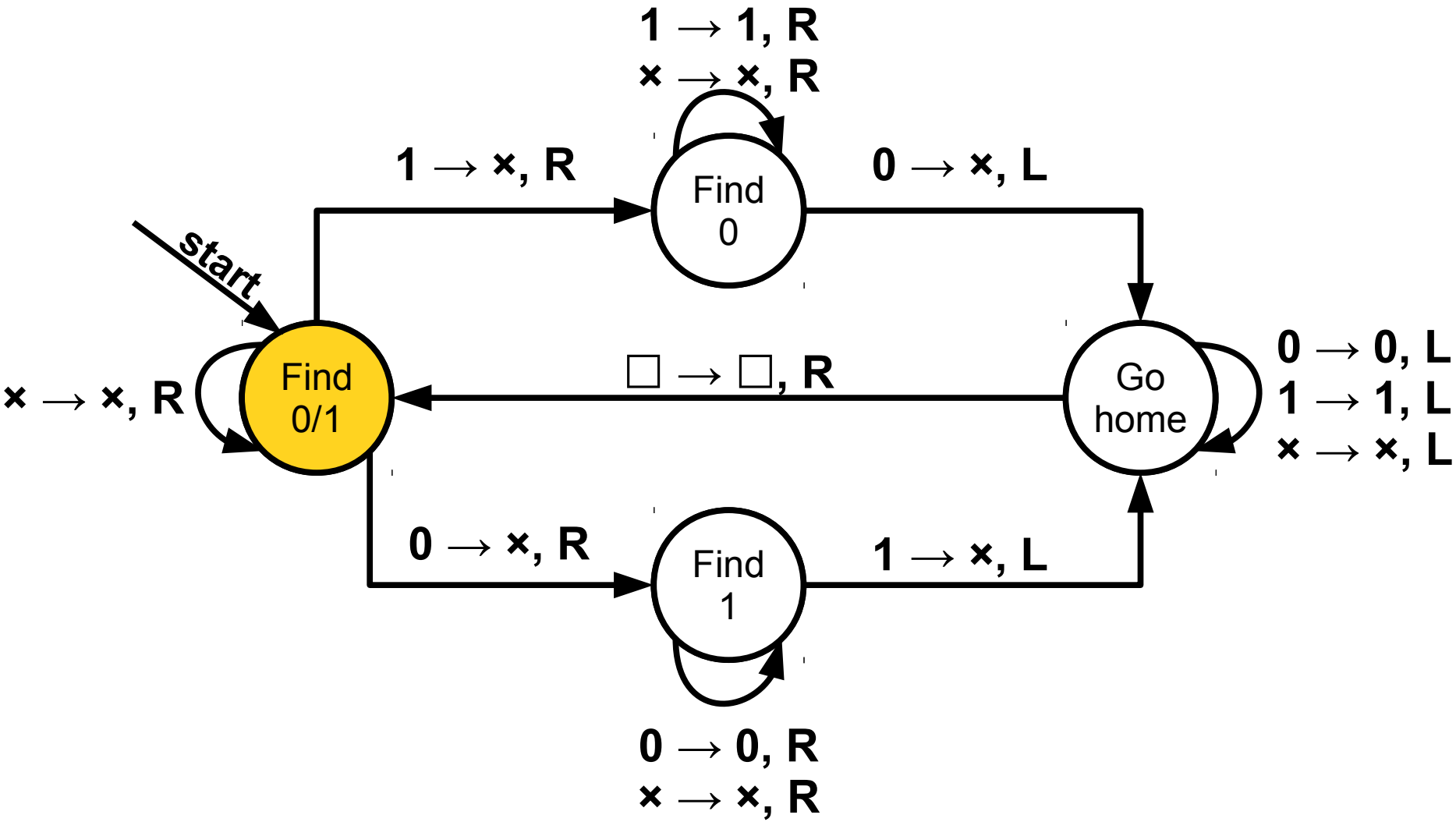
1 → 1, R
× → ×, R
1 → ×, R
0 → ×, L
start
Find 0
Find 0/1
× → ×, R
□ → □, R
Go home
0 → 0, L
1 → 1, L
× → ×, L
0 → ×, R
Find 1
1 → ×, L
0 → 0, R
× → ×, R

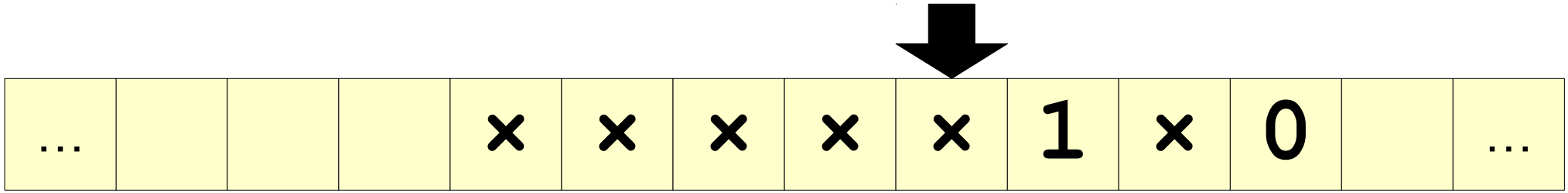
... × × × × × 1 × 0 ...

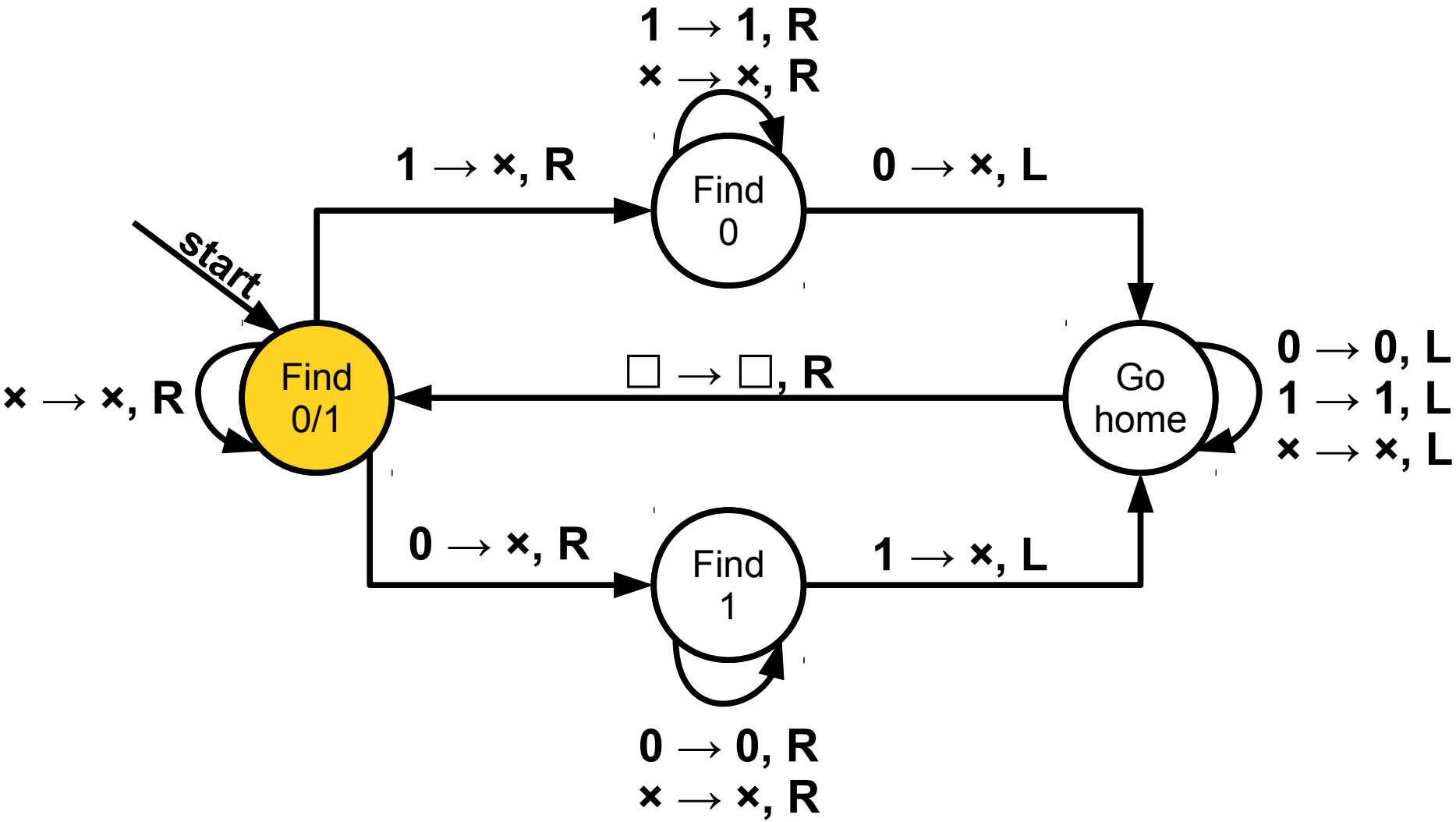
1 → 1, R
× → ×, R
1 → ×, R
Find 0
0 → ×, L
start
× → ×, R
Find 0/1
□ → □, R
Go home
0 → 0, L
1 → 1, L
× → ×, L
0 → ×, R
Find 1
1 → ×, L
0 → 0, R
× → ×, R

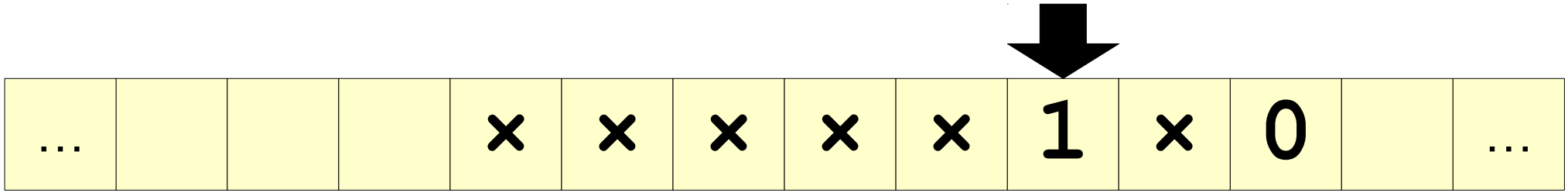
... × × × × × 1 × 0 ...

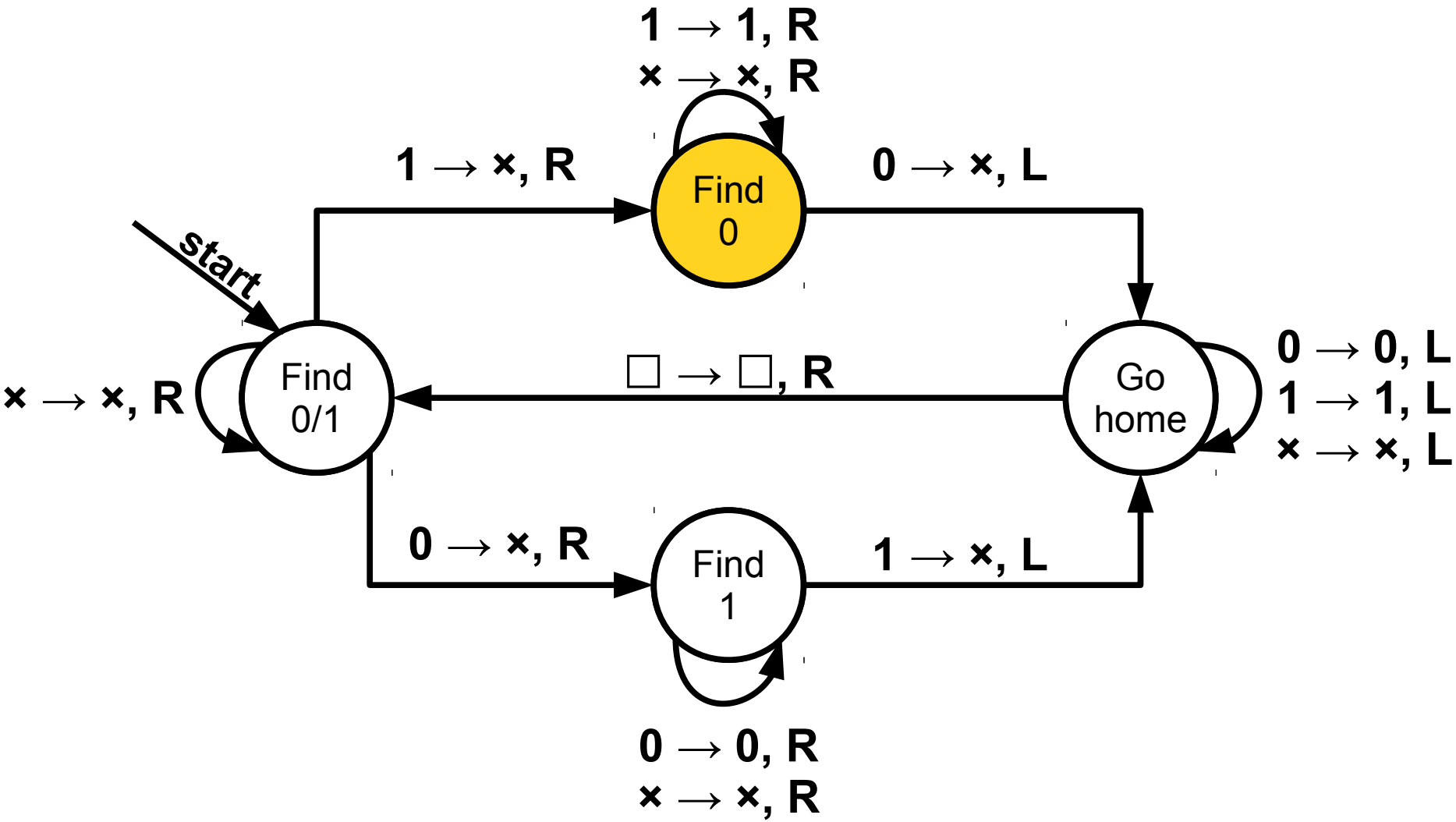
1 → 1, R
× → ×, R
1 → ×, R
Find 0
0 → ×, L
start
× → ×, R
Find 0/1
□ → □, R
Go home
0 → 0, L
1 → 1, L
× → ×, L
0 → ×, R
Find 1
1 → ×, L
0 → 0, R
× → ×, R

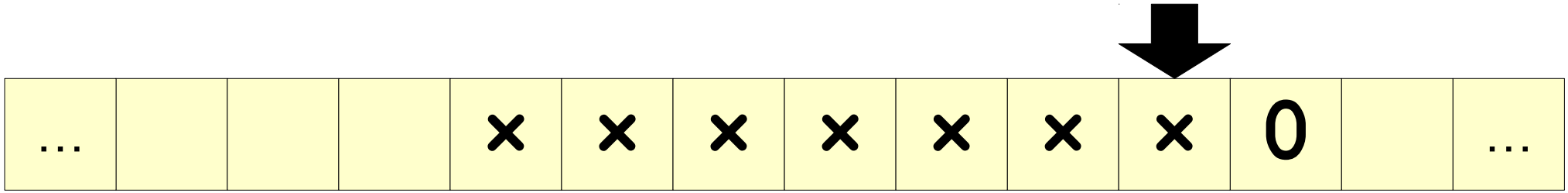
…
×
×
×
×
×
×
×
0
…

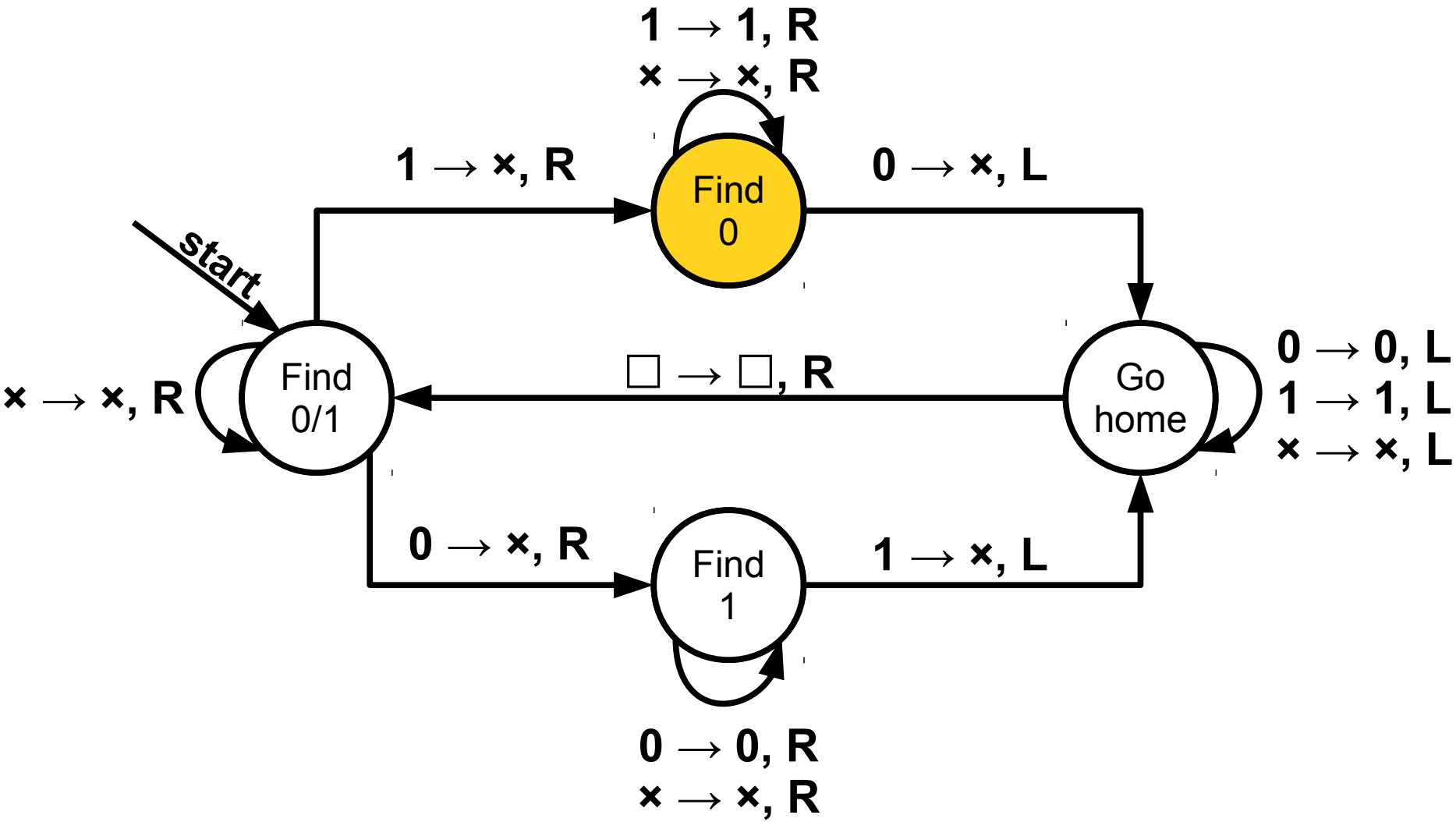
1 → 1, R
× → ×, R
1 → ×, R
Find 0
0 → ×, L
start
× → ×, R
Find 0/1
□ → □, R
Go home
0 → 0, L
1 → 1, L
× → ×, L
0 → ×, R
Find 1
1 → ×, L
0 → 0, R
× → ×, R

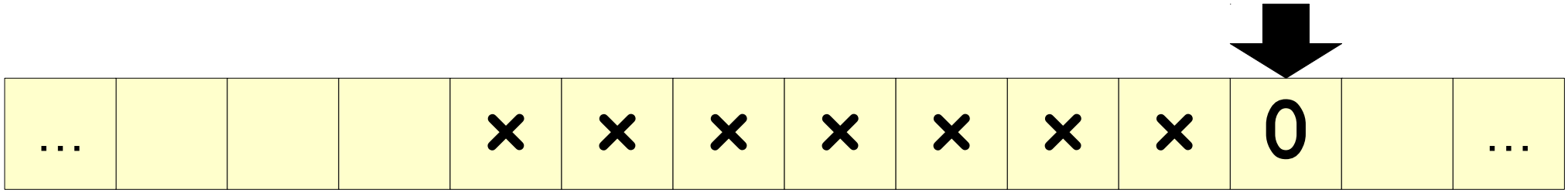
…
×
×
×
×
×
×
×
0
…

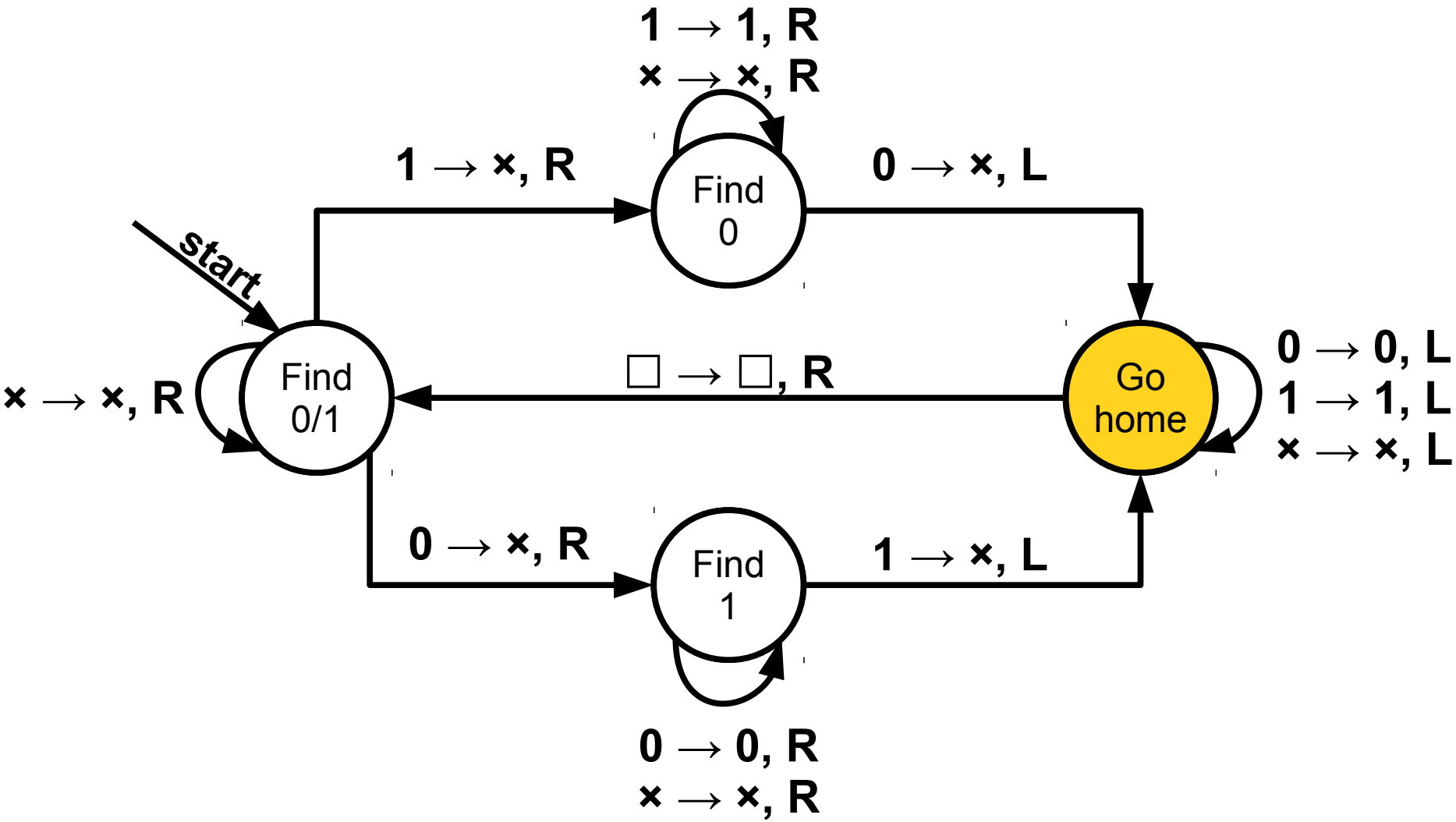
1 → 1, R
× → ×, R
1 → ×, R
Find 0
0 → ×, L
start
× → ×, R
Find 0/1
□ → □, R
Go home
0 → 0, L
1 → 1, L
× → ×, L
0 → ×, R
Find 1
1 → ×, L
0 → 0, R
× → ×, R

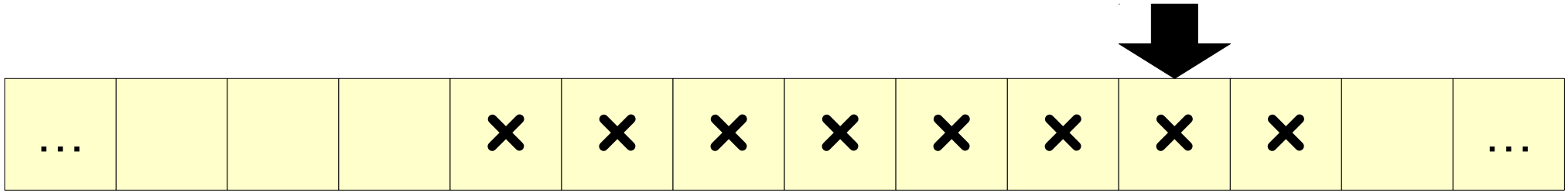
…
×
×
×
×
×
×
×
×
…

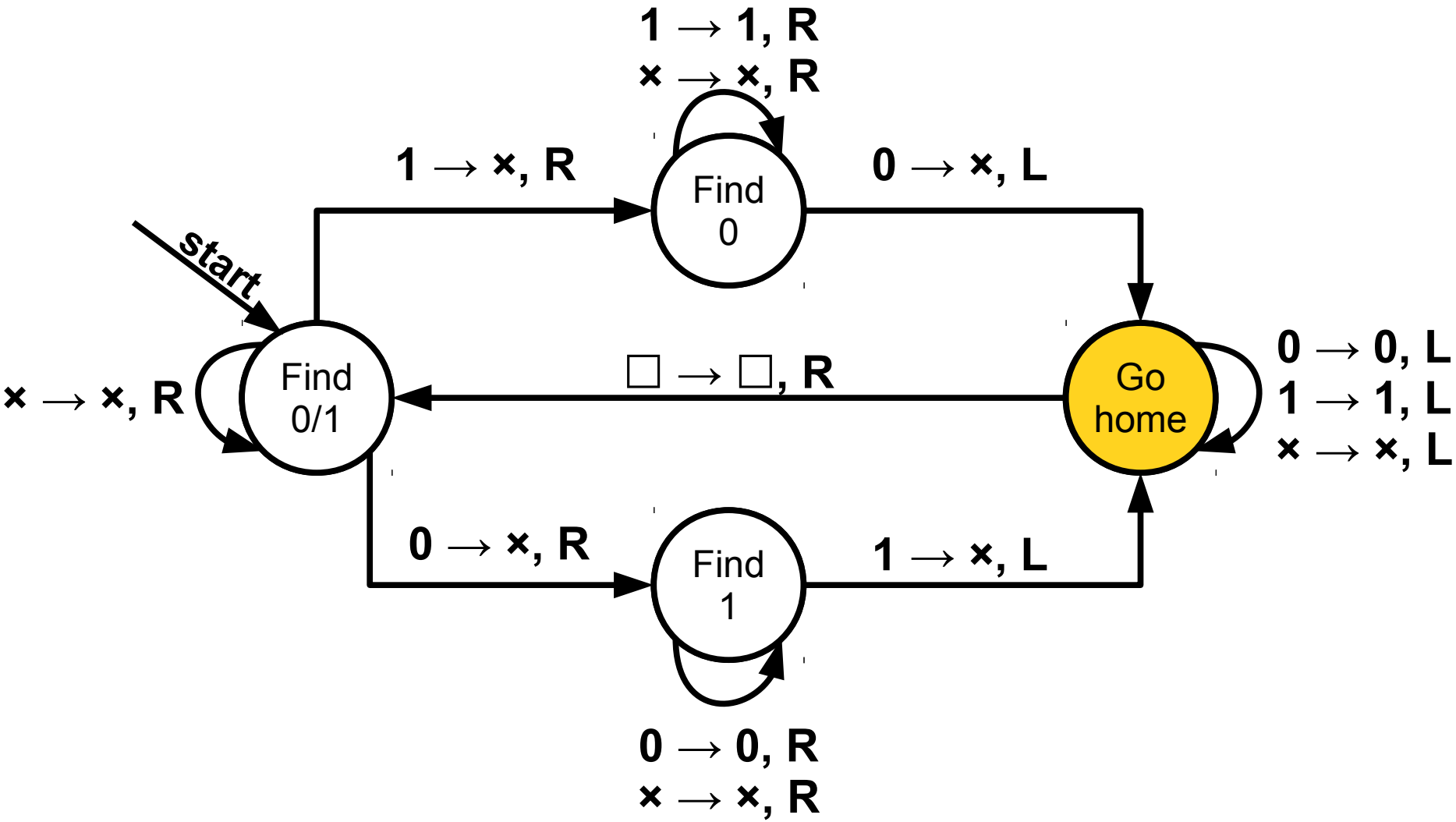
1 → 1, R
× → ×, R
1 → ×, R
Find 0
0 → ×, L
start
× → ×, R
Find 0/1
□ → □, R
Go home
0 → 0, L
1 → 1, L
× → ×, L
0 → ×, R
Find 1
1 → ×, L
0 → 0, R
× → ×, R

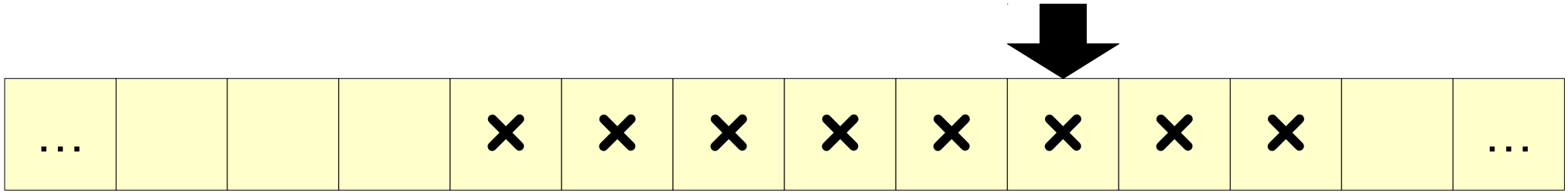
…
×
×
×
×
×
×
×
×
…

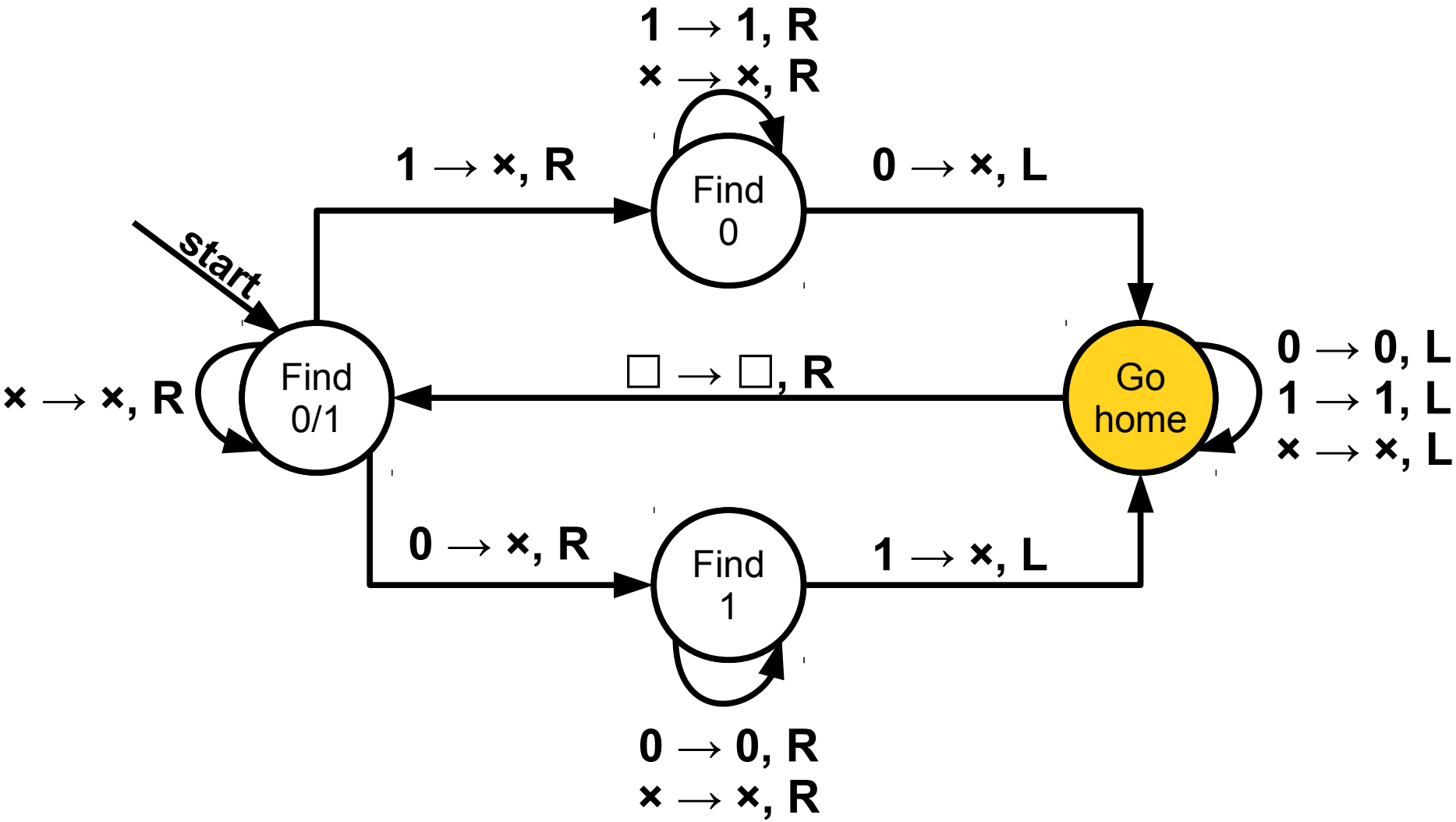
1 → 1, R
× → ×, R
1 → ×, R
Find 0
0 → ×, L
start
× → ×, R
Find 0/1
□ → □, R
Go home
0 → 0, L
1 → 1, L
× → ×, L
0 → ×, R
Find 1
1 → ×, L
0 → 0, R
× → ×, R

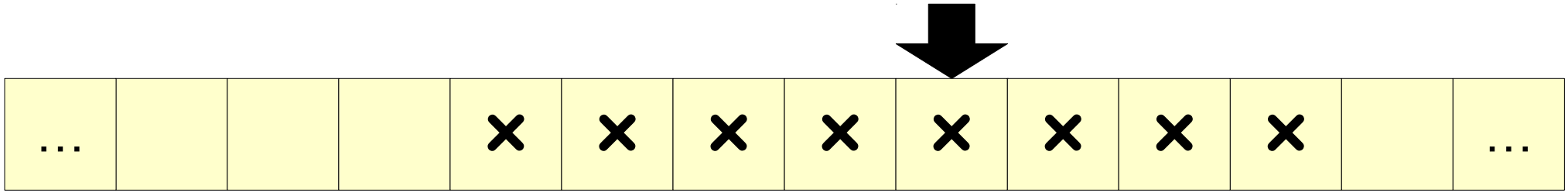
…
×
×
×
×
×
×
×
×
×
…

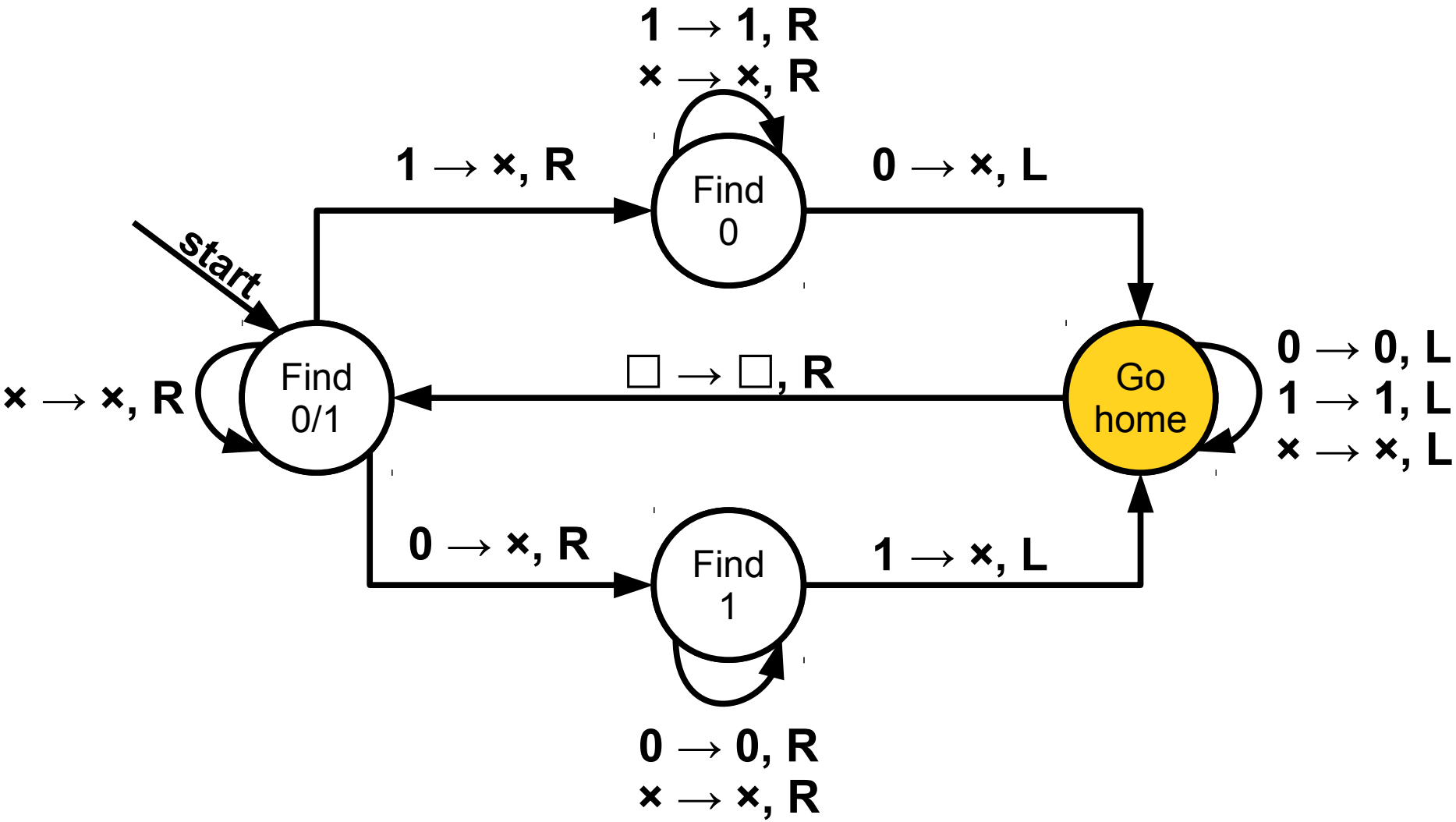
1 → 1, R
× → ×, R
1 → ×, R
Find 0
0 → ×, L
start
× → ×, R
Find 0/1
□ → □, R
Go home
0 → 0, L
1 → 1, L
× → ×, L
0 → ×, R
Find 1
1 → ×, L
0 → 0, R
× → ×, R

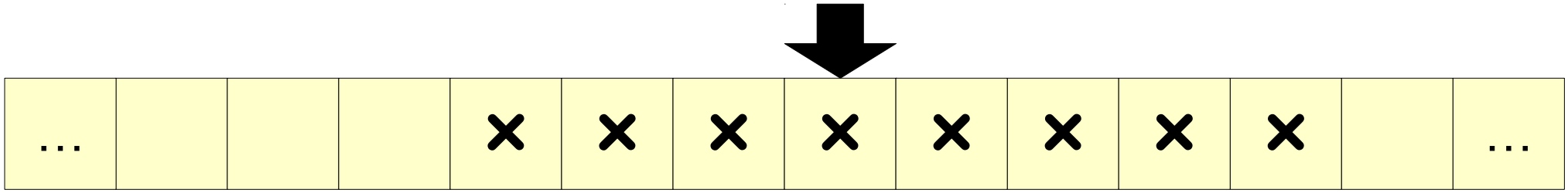
…
×
×
×
×
×
×
×
×
×
…

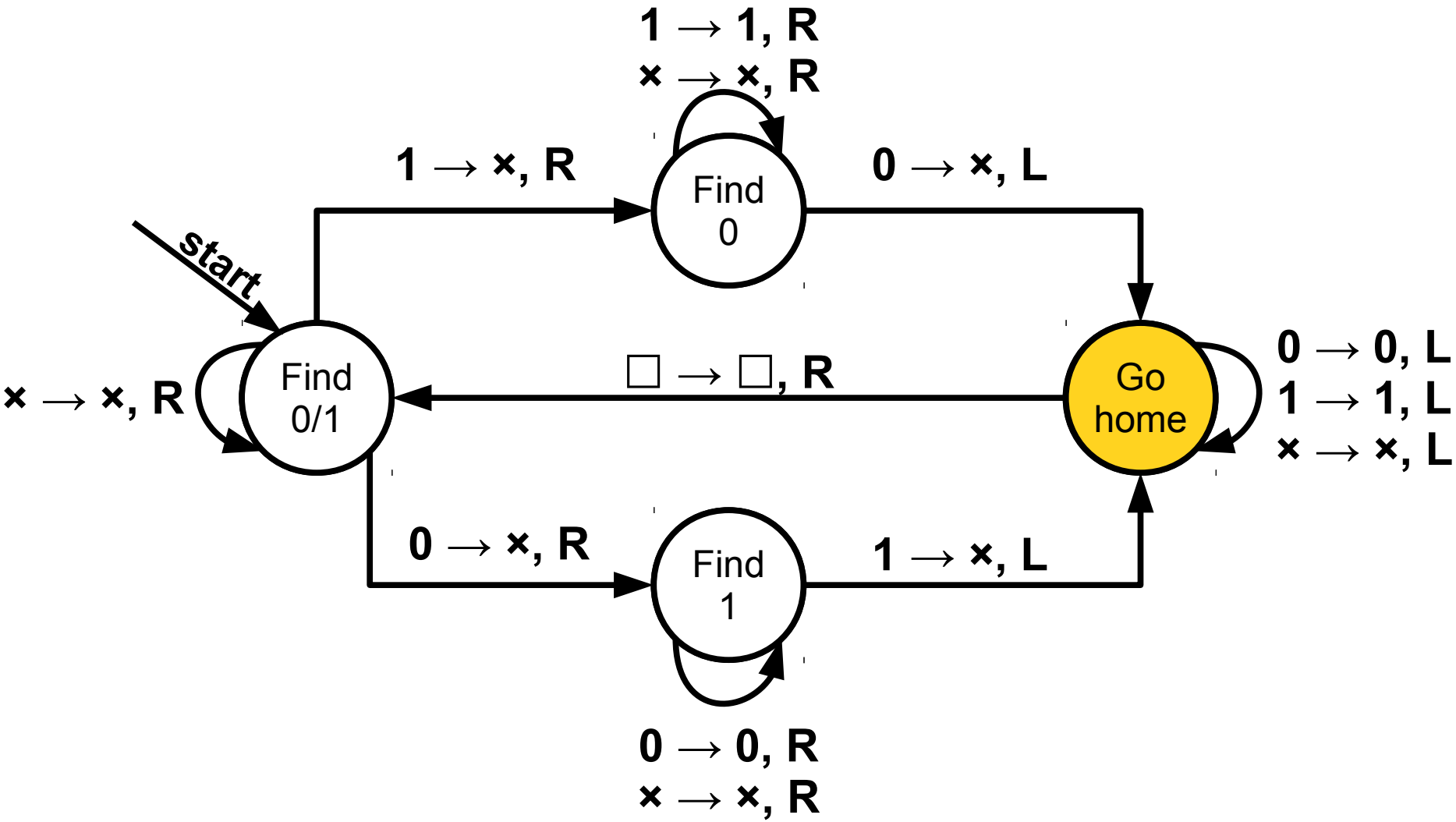
1 → 1, R
× → ×, R
1 → ×, R
Find 0
0 → ×, L
start
× → ×, R
Find 0/1
□ → □, R
Go home
0 → 0, L
1 → 1, L
× → ×, L
0 → ×, R
Find 1
1 → ×, L
0 → 0, R
× → ×, R

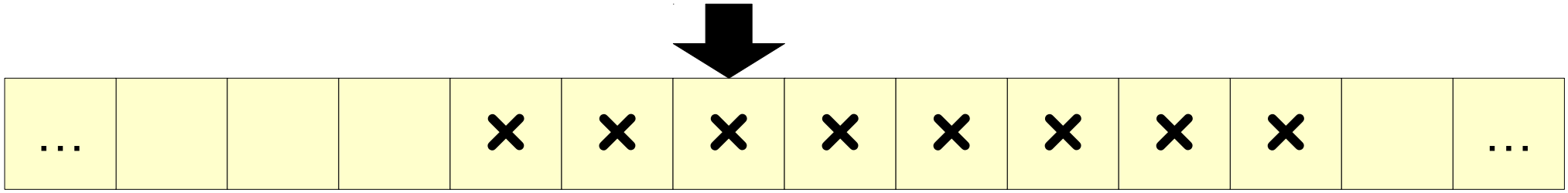
…
×
×
×
×
×
×
×
×
×
…

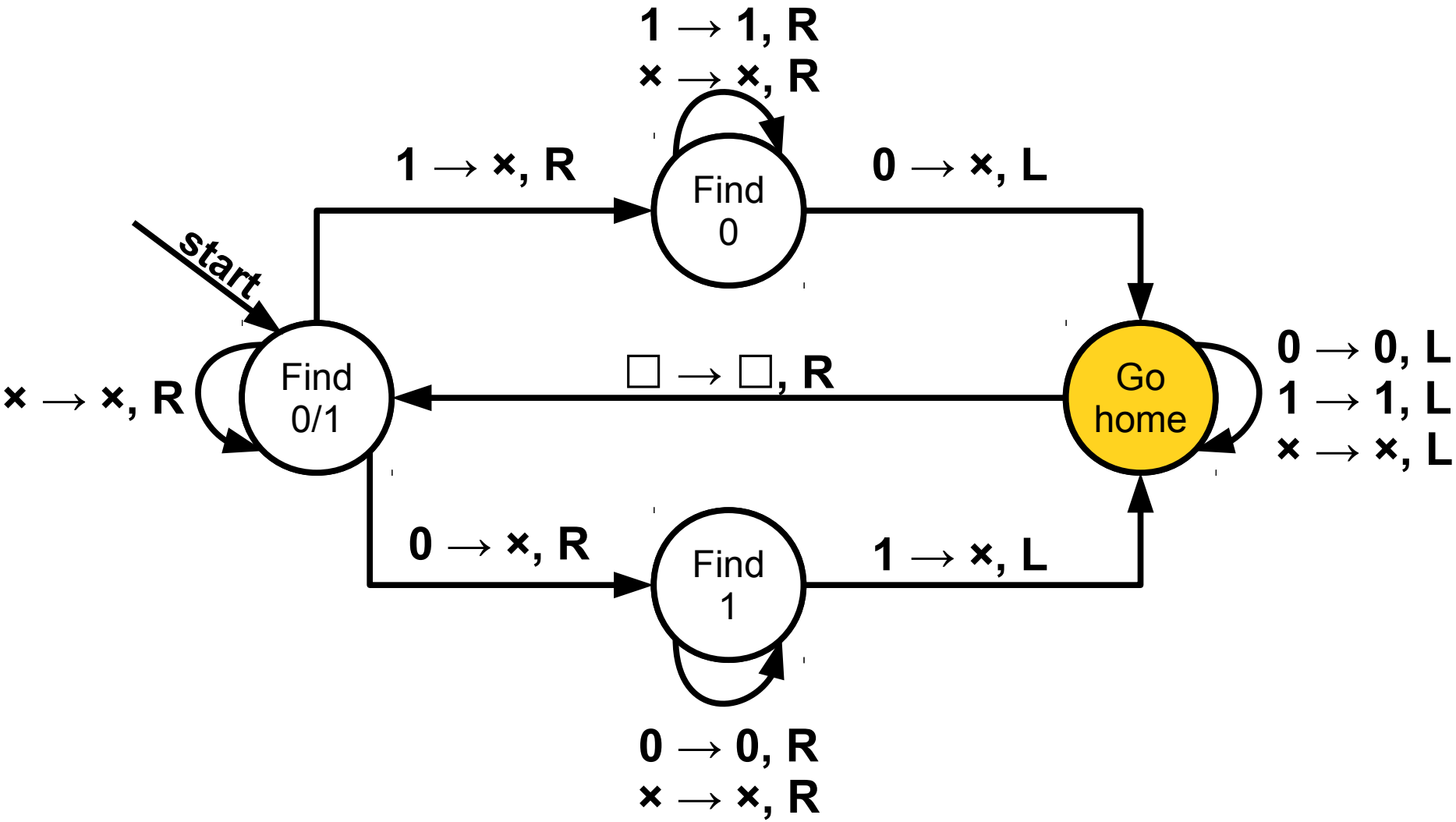
1 → 1, R
× → ×, R
1 → ×, R
Find 0
0 → ×, L
start
× → ×, R
Find 0/1
□ → □, R
Go home
0 → 0, L
1 → 1, L
× → ×, L
0 → ×, R
Find 1
1 → ×, L
0 → 0, R
× → ×, R

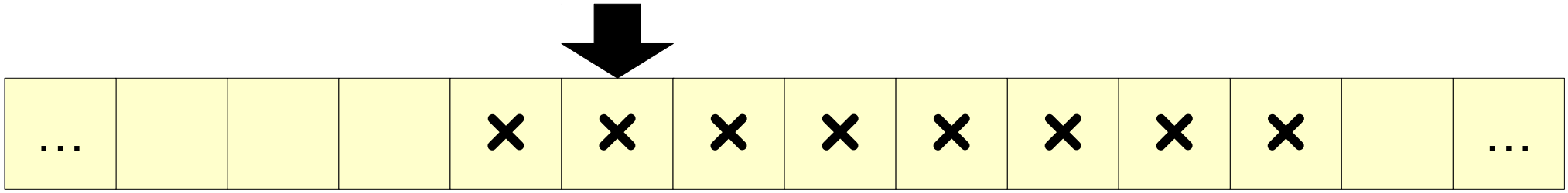
…
×
×
×
×
×
×
×
×
…

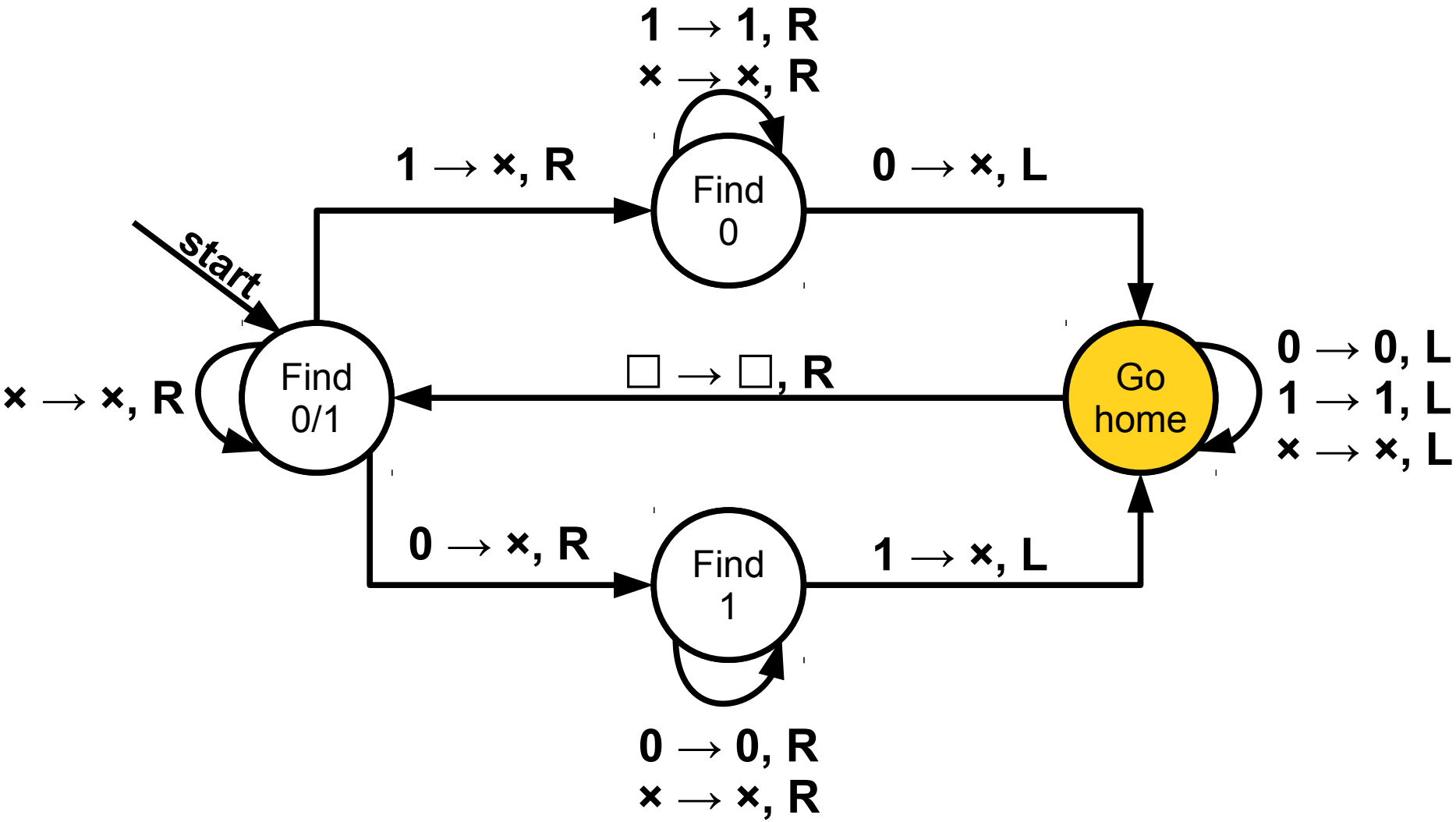
1 → 1, R
× → ×, R
1 → ×, R
Find 0
0 → ×, L
start
× → ×, R
Find 0/1
□ → □, R
Go home
0 → 0, L
1 → 1, L
× → ×, L
0 → ×, R
Find 1
1 → ×, L
0 → 0, R
× → ×, R

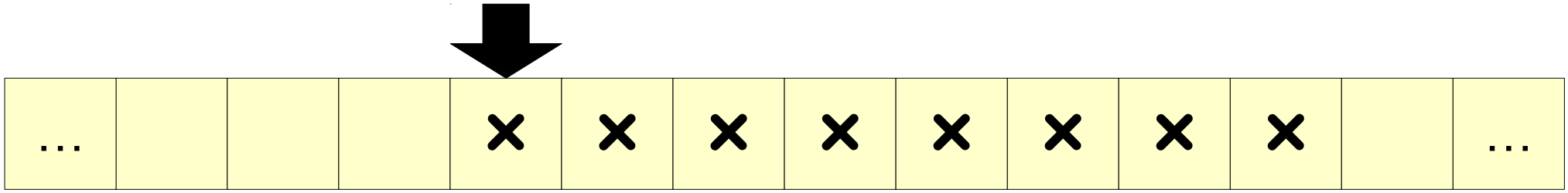
…
×
×
×
×
×
×
×
×
…

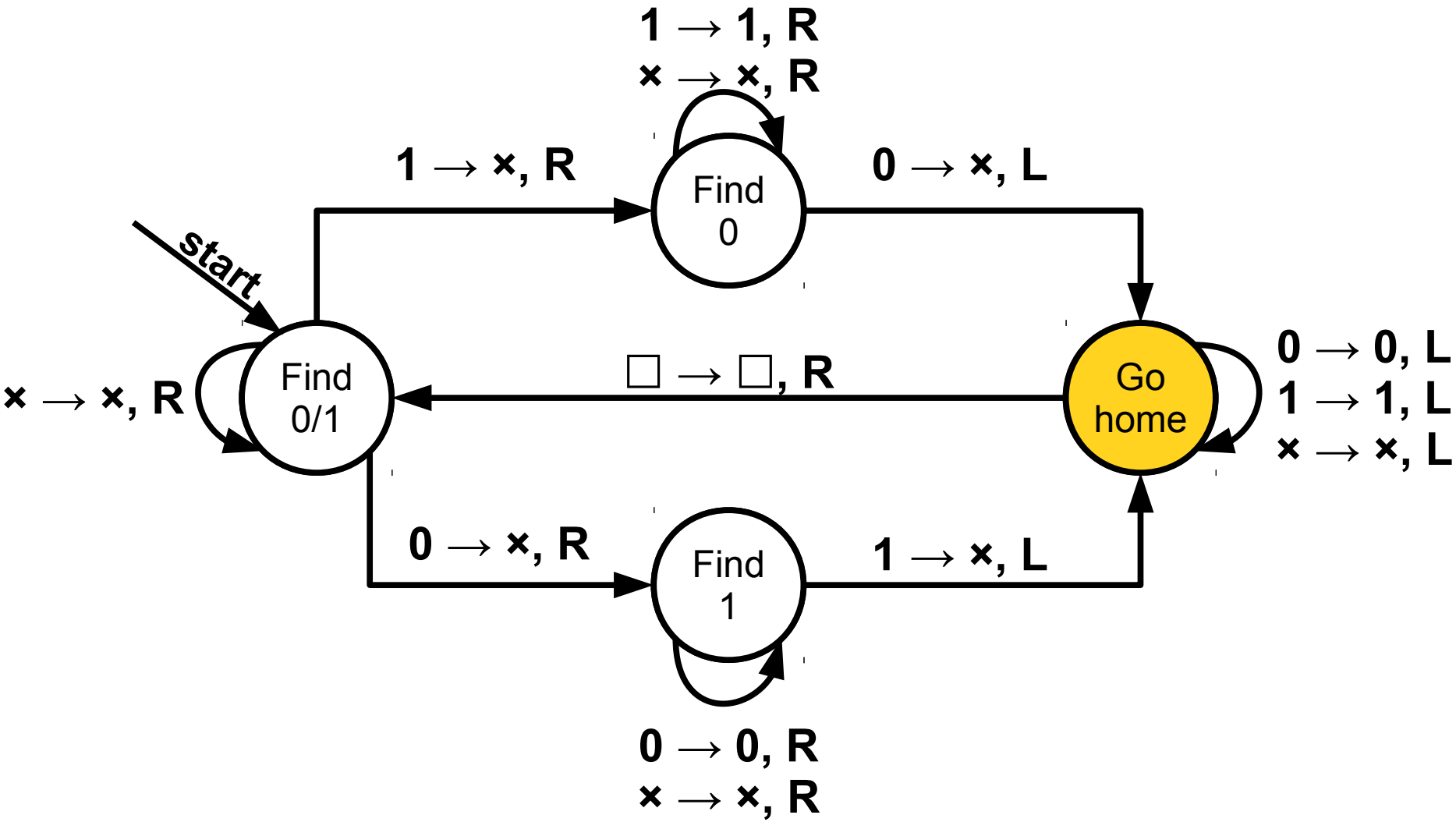
1 → 1, R
× → ×, R
1 → ×, R
Find 0
0 → ×, L
start
× → ×, R
Find 0/1
□ → □, R
Go home
0 → 0, L
1 → 1, L
× → ×, L
0 → ×, R
Find 1
1 → ×, L
0 → 0, R
× → ×, R

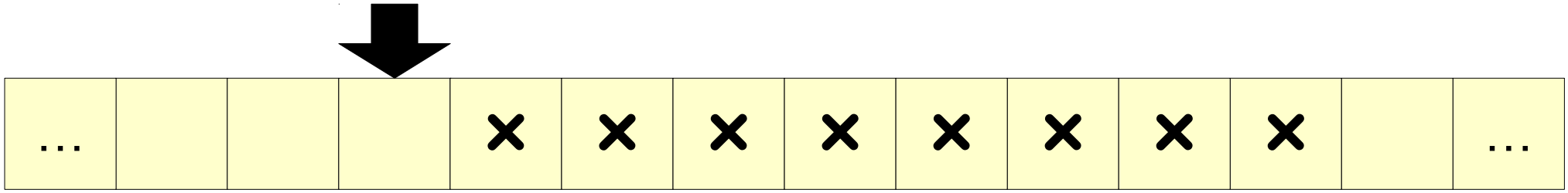
…
×
×
×
×
×
×
×
×
…

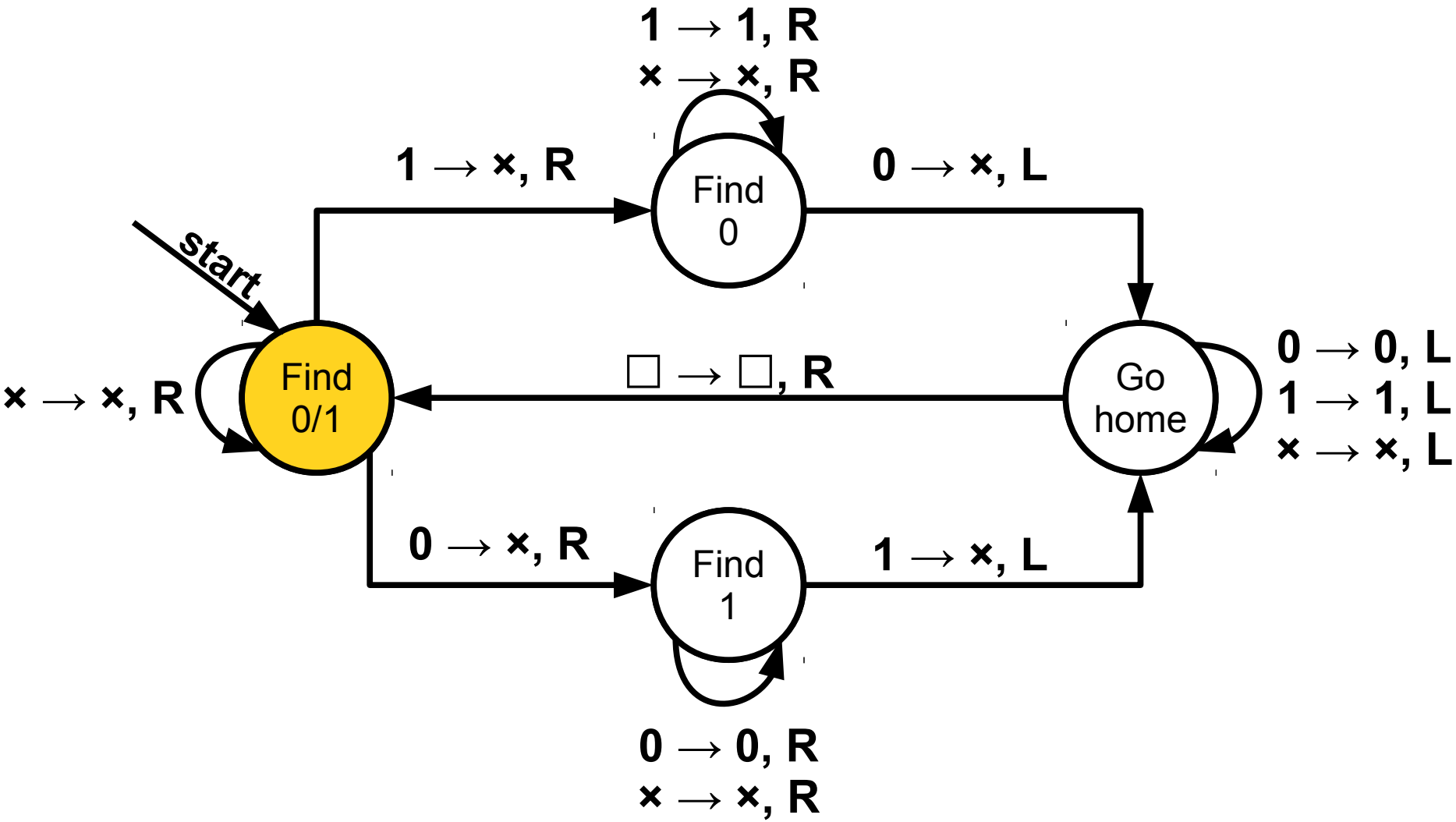
1 → 1, R
× → ×, R
1 → ×, R
Find 0
0 → ×, L
start
× → ×, R
Find 0/1
□ → □, R
Go home
0 → 0, L
1 → 1, L
× → ×, L
0 → ×, R
Find 1
1 → ×, L
0 → 0, R
× → ×, R

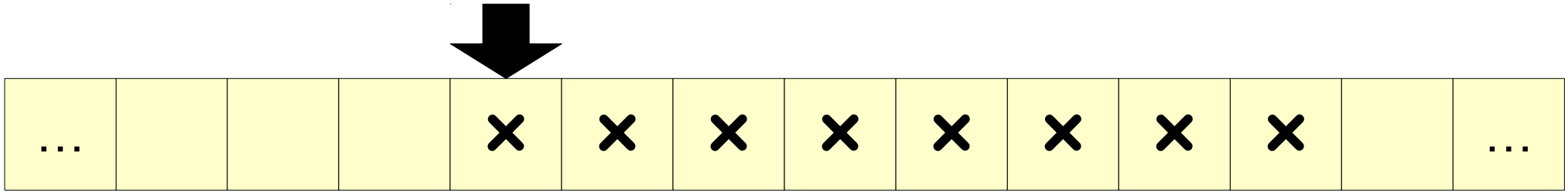
…
×
×
×
×
×
×
×
×
…

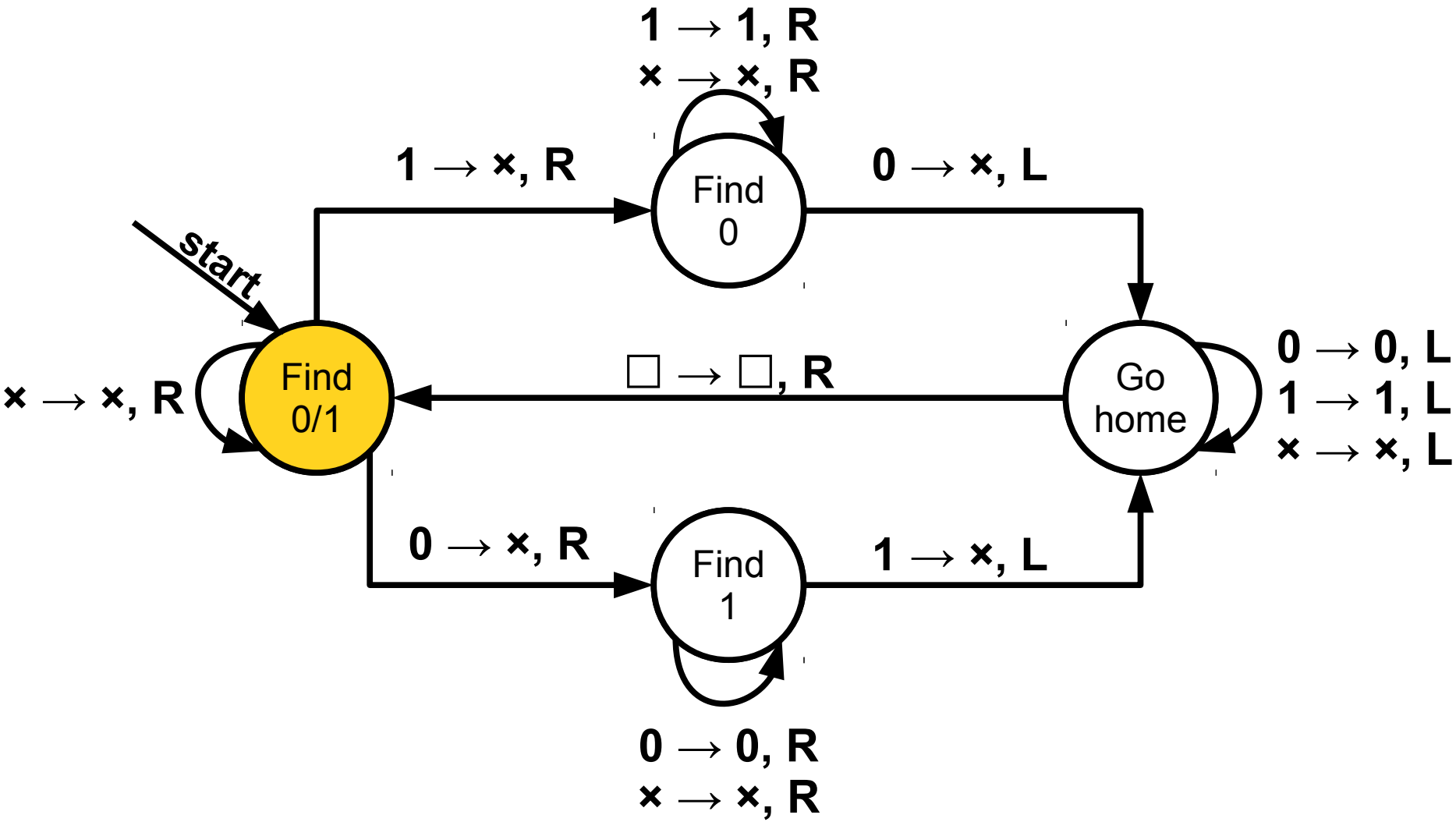
1 → 1, R
× → ×, R
1 → ×, R
Find 0
0 → ×, L
start
× → ×, R
Find 0/1
□ → □, R
Go home
0 → 0, L
1 → 1, L
× → ×, L
0 → ×, R
Find 1
1 → ×, L
0 → 0, R
× → ×, R

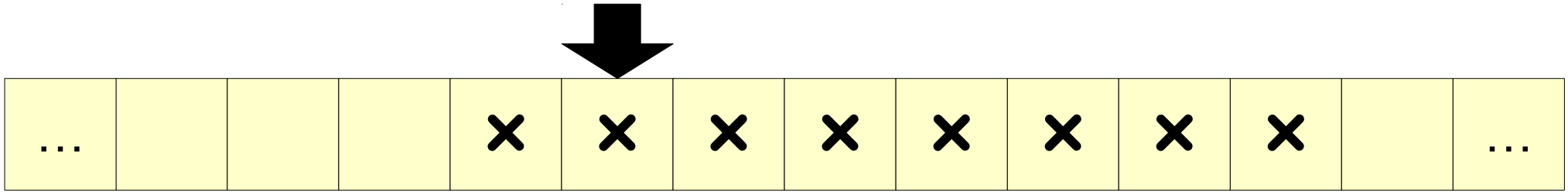
…
×
×
×
×
×
×
×
×
×
…

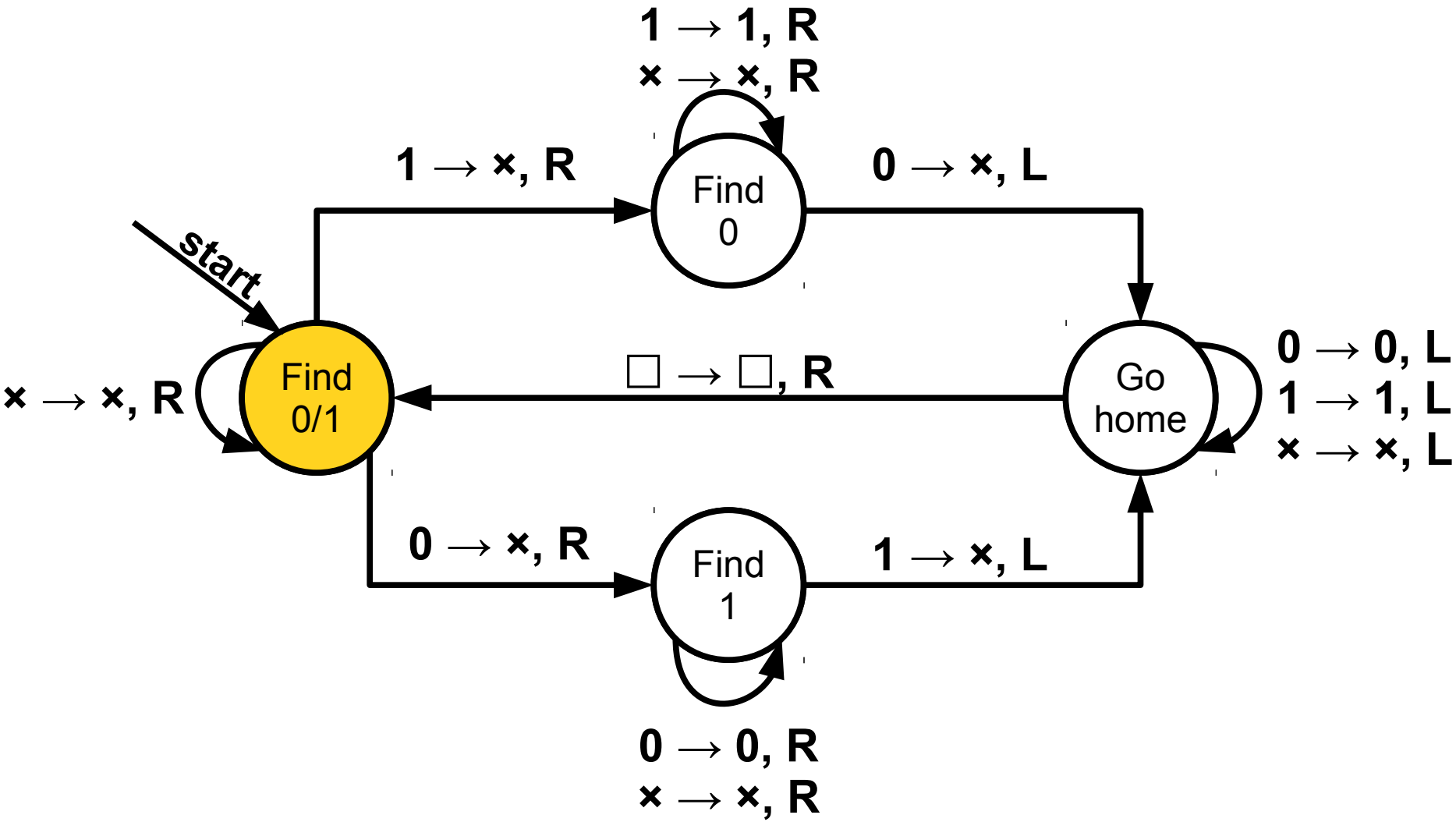
1 → 1, R
× → ×, R
1 → ×, R
0 → ×, L
start
Find 0
Find 0/1
× → ×, R
□ → □, R
Go home
0 → 0, L
1 → 1, L
× → ×, L
0 → ×, R
Find 1
1 → ×, L
0 → 0, R
× → ×, R

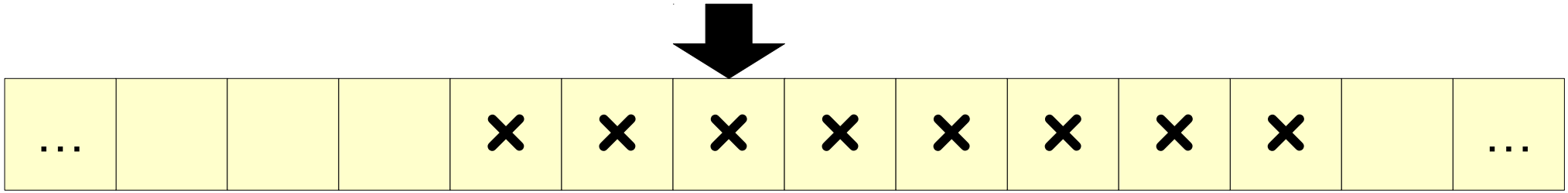
…
×
×
×
×
×
×
×
×
×
…

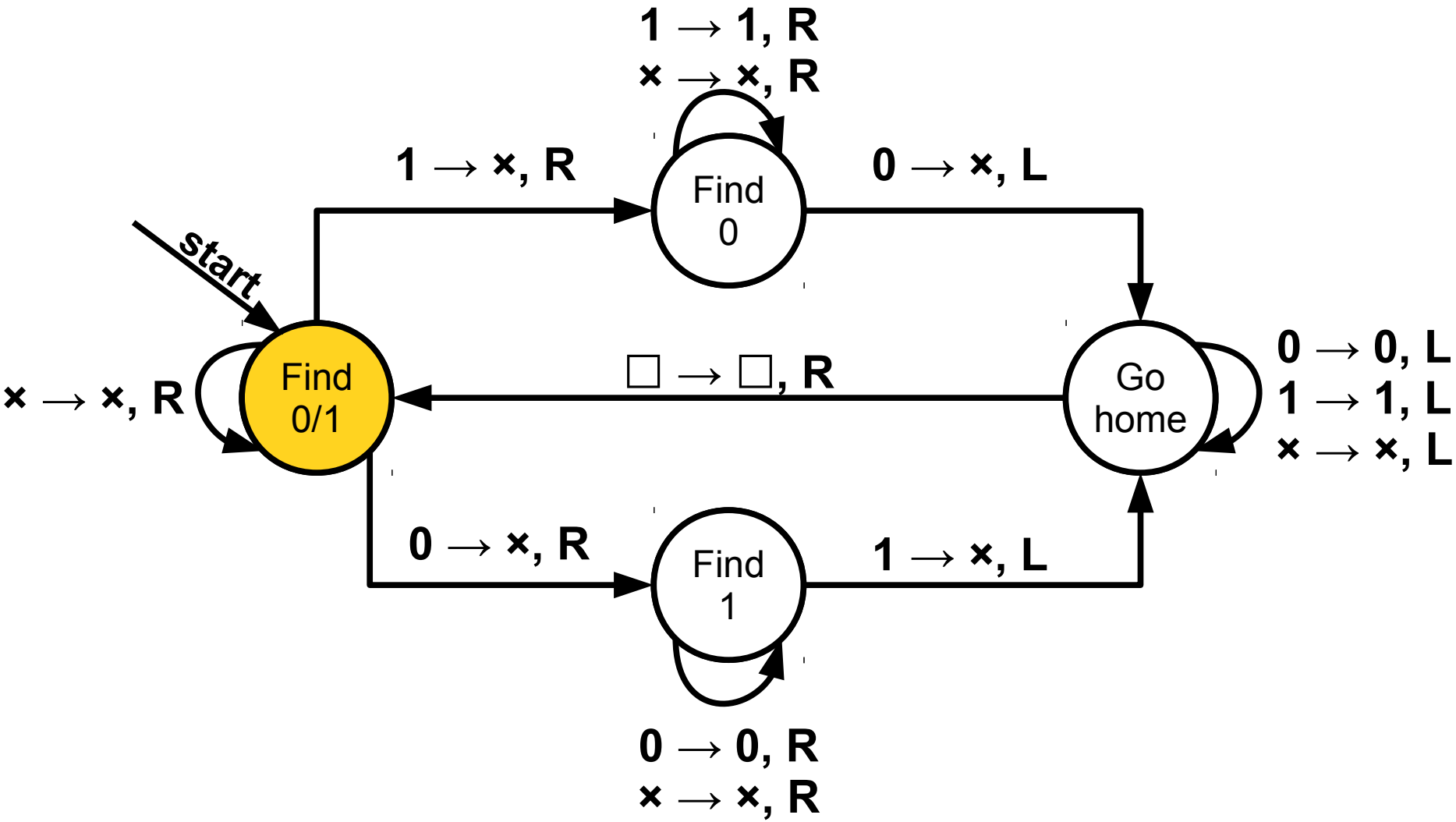
1 → 1, R
× → ×, R
1 → ×, R
Find 0
0 → ×, L
start
× → ×, R
Find 0/1
□ → □, R
Go home
0 → 0, L
1 → 1, L
× → ×, L
0 → ×, R
Find 1
1 → ×, L
0 → 0, R
× → ×, R

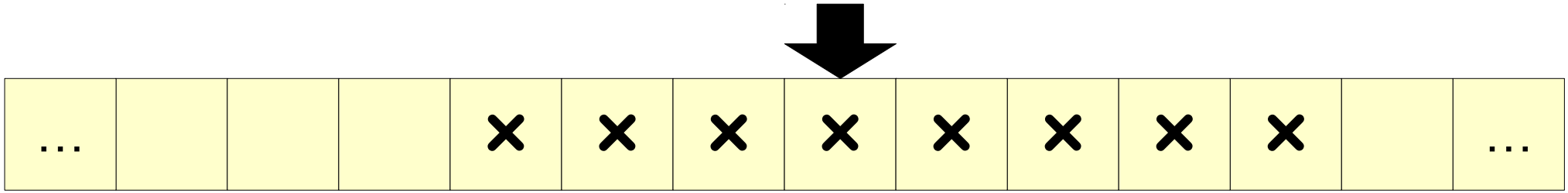
…
×
×
×
×
×
×
×
×
×
…

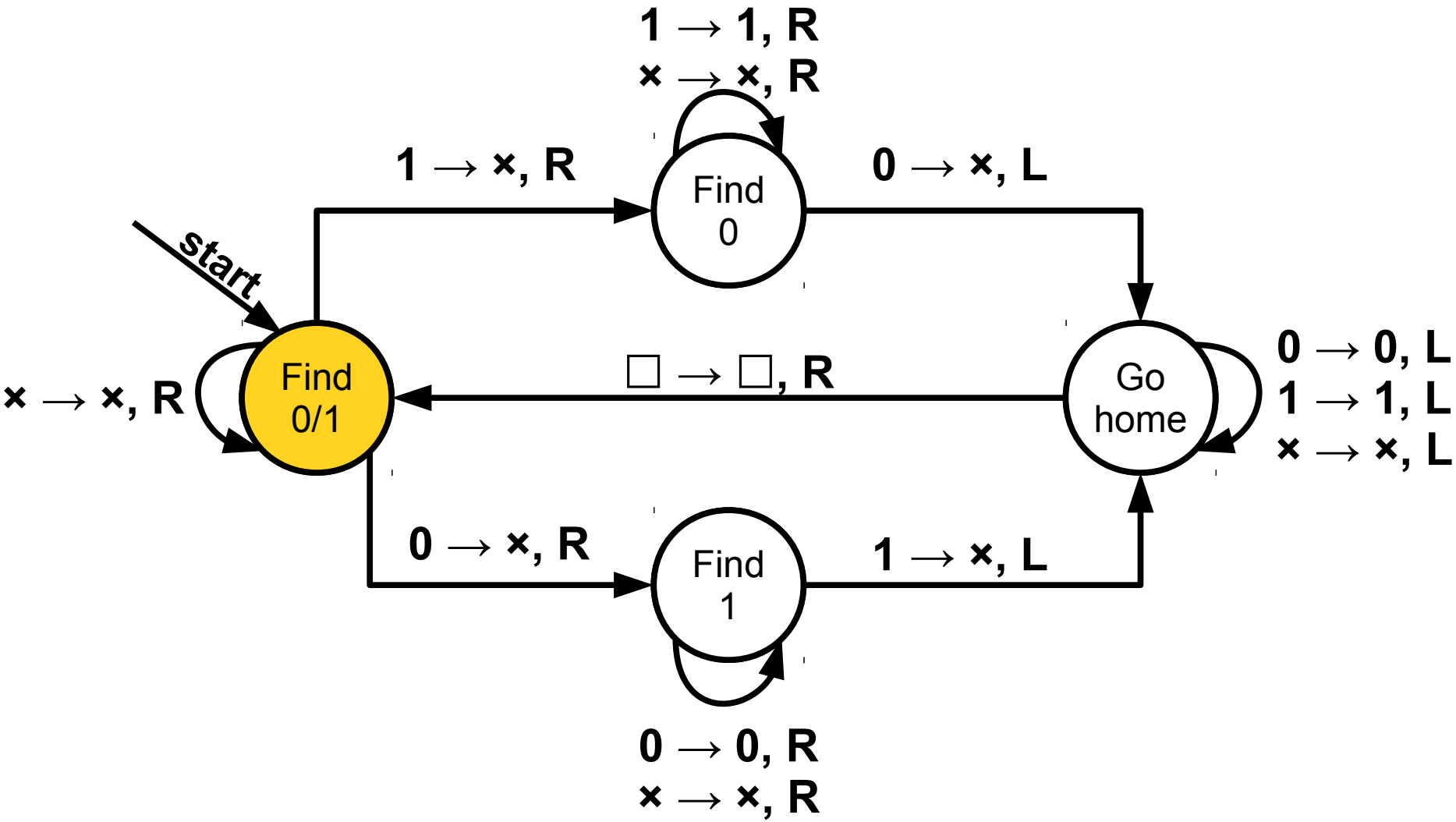
1 → 1, R
× → ×, R
1 → ×, R
0 → ×, L
start
Find 0
Find 0/1
× → ×, R
□ → □, R
Go home
0 → 0, L
1 → 1, L
× → ×, L
0 → ×, R
Find 1
1 → ×, L
0 → 0, R
× → ×, R

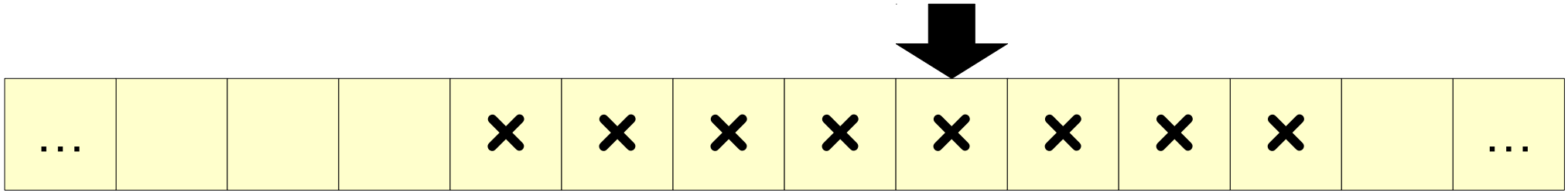
…
×
×
×
×
×
×
×
×
×
…

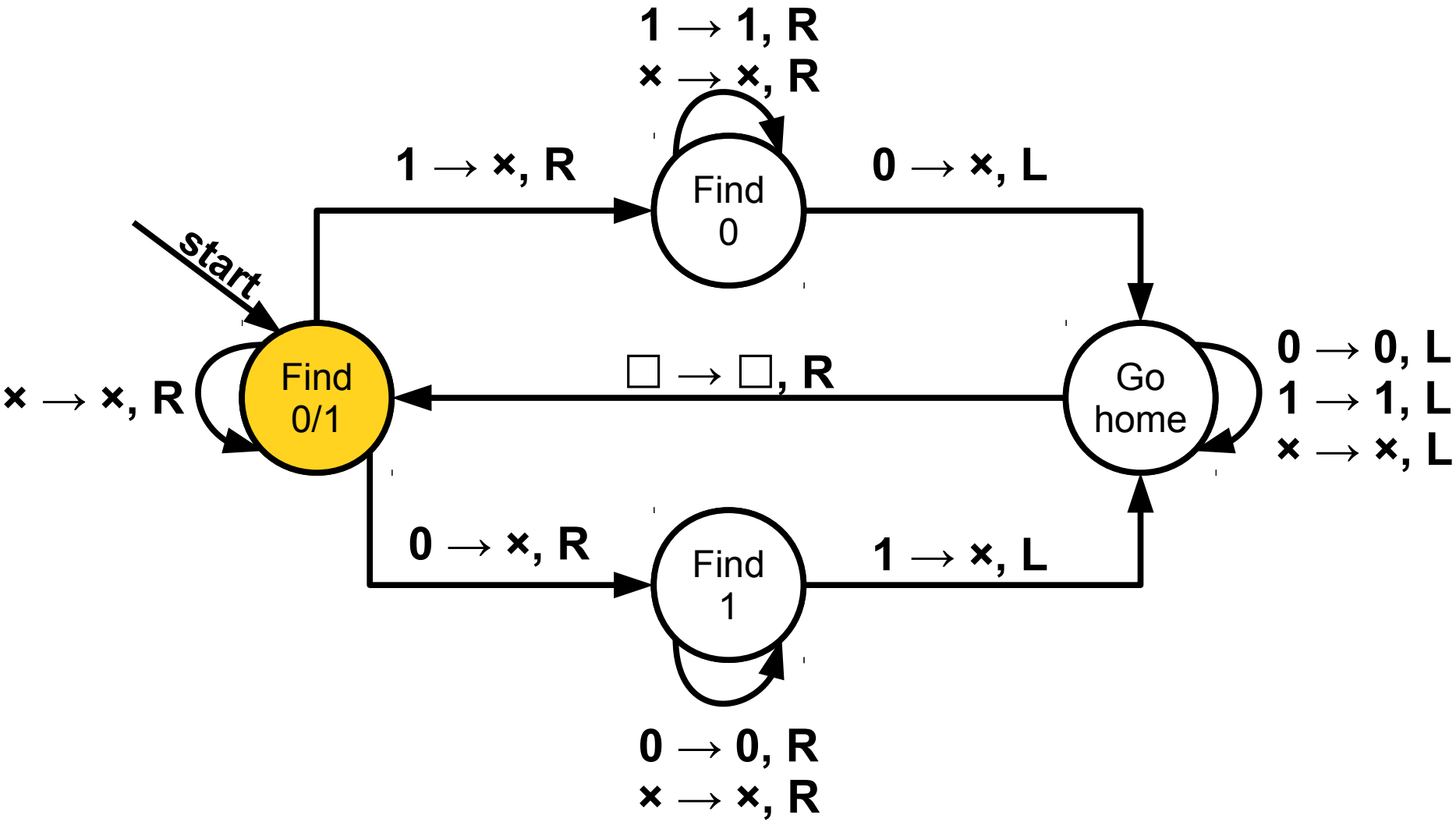
1 → 1, R
× → ×, R
1 → ×, R
0 → ×, L
start
Find 0
Find 0/1
× → ×, R
□ → □, R
Go home
0 → 0, L
1 → 1, L
× → ×, L
0 → ×, R
Find 1
1 → ×, L
0 → 0, R
× → ×, R

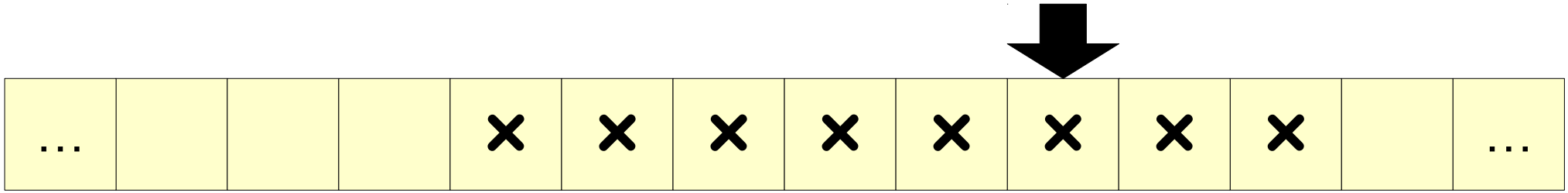
…
×
×
×
×
×
×
×
×
…

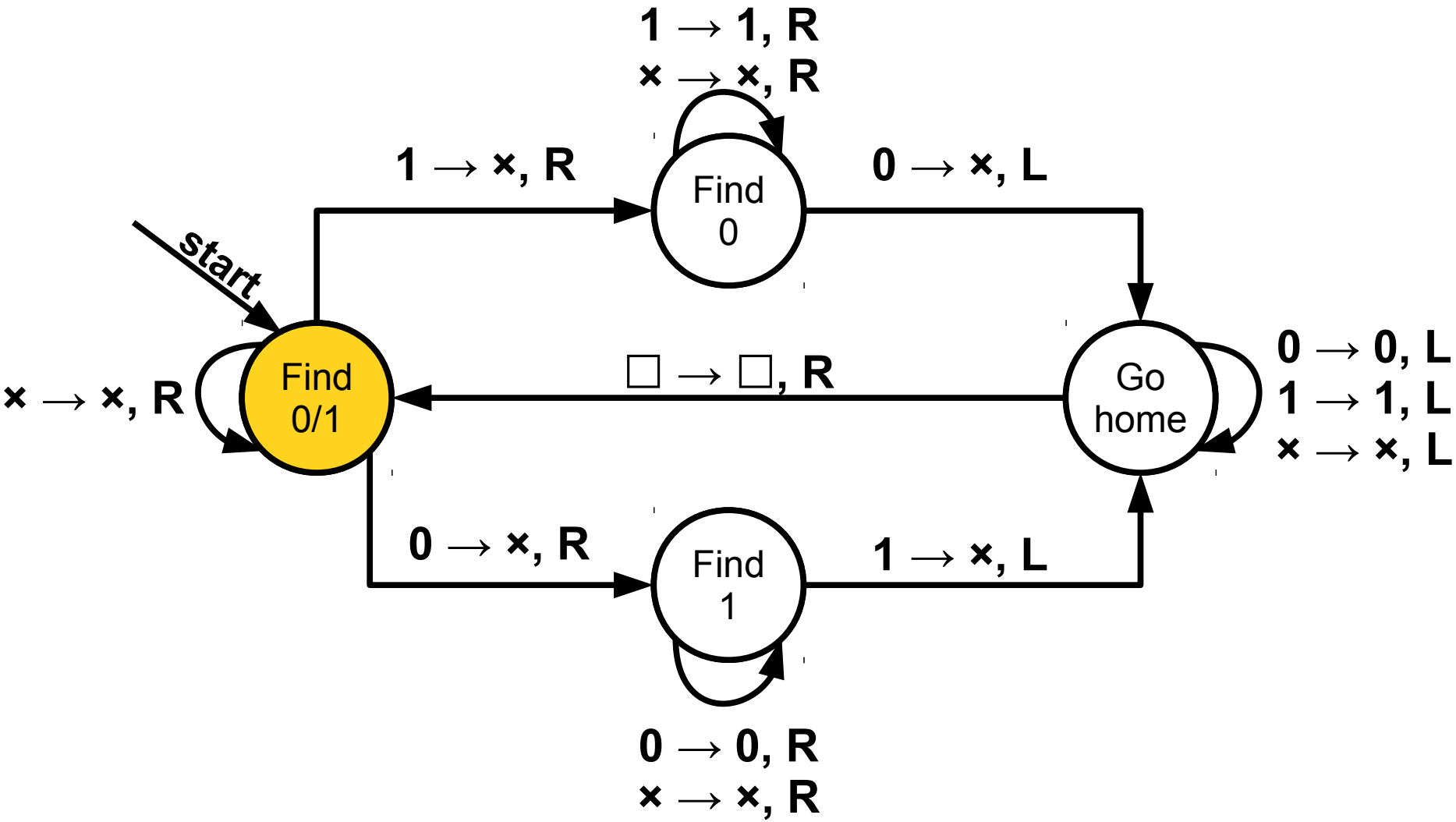
1 → 1, R
× → ×, R
1 → ×, R
Find 0
0 → ×, L
start
× → ×, R
Find 0/1
□ → □, R
Go home
0 → 0, L
1 → 1, L
× → ×, L
0 → ×, R
Find 1
1 → ×, L
0 → 0, R
× → ×, R

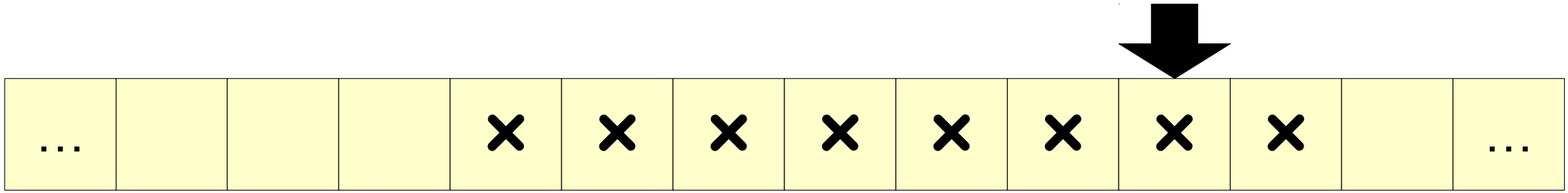
…
×
×
×
×
×
×
×
×
…

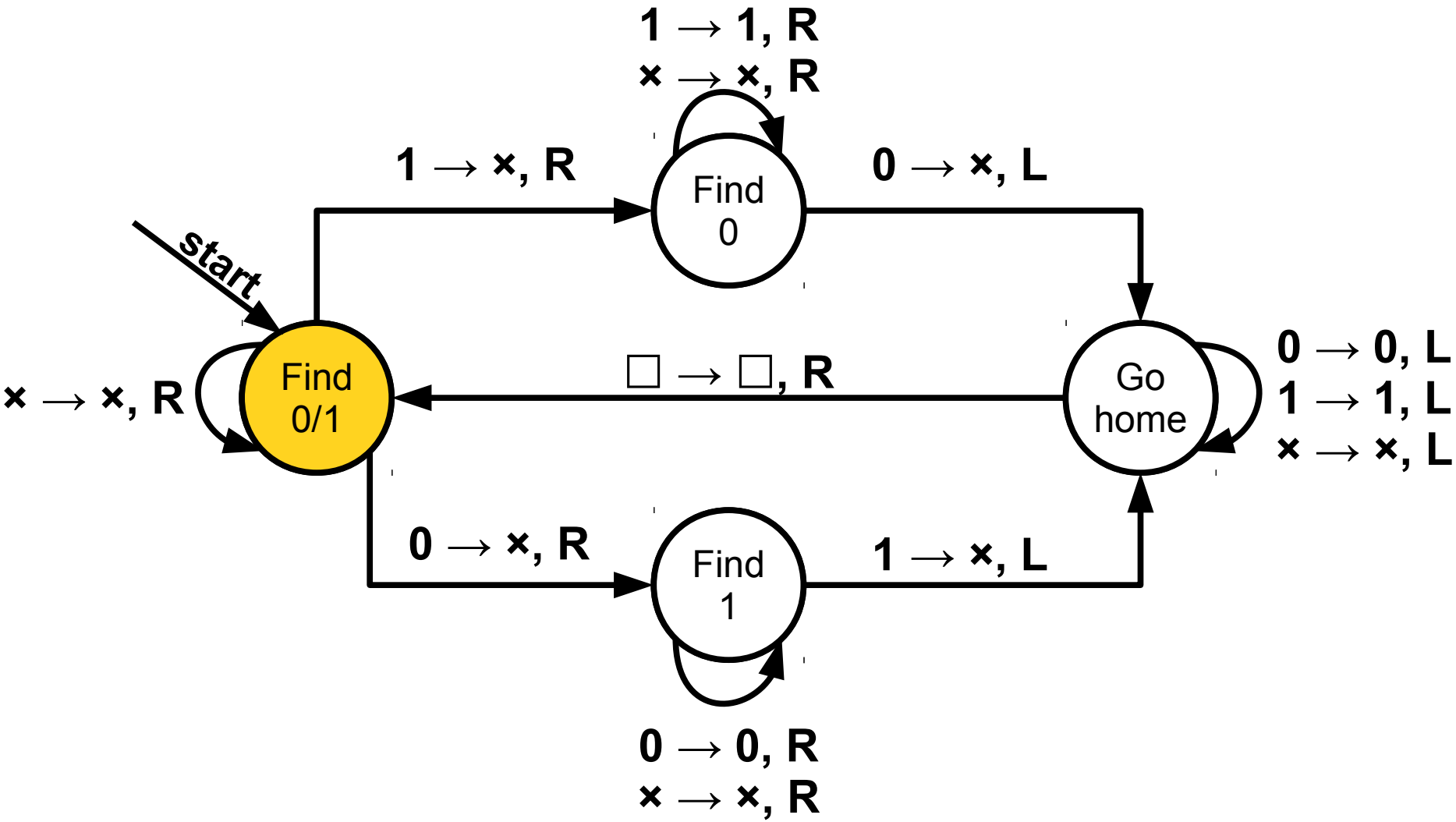
1 → 1, R
× → ×, R
1 → ×, R
Find 0
0 → ×, L
start
× → ×, R
Find 0/1
□ → □, R
Go home
0 → 0, L
1 → 1, L
× → ×, L
0 → ×, R
Find 1
1 → ×, L
0 → 0, R
× → ×, R

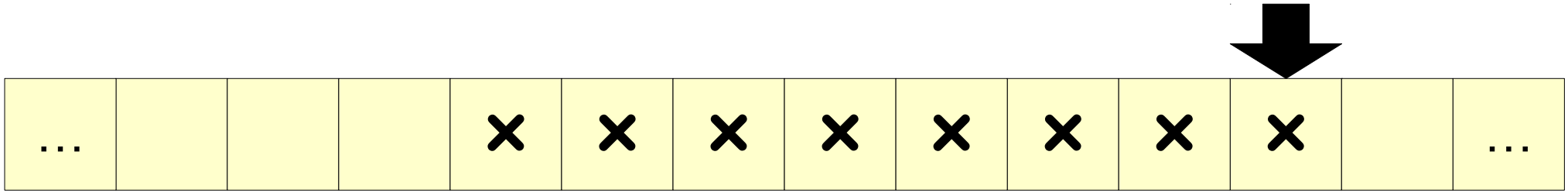
…
×
×
×
×
×
×
×
×
…

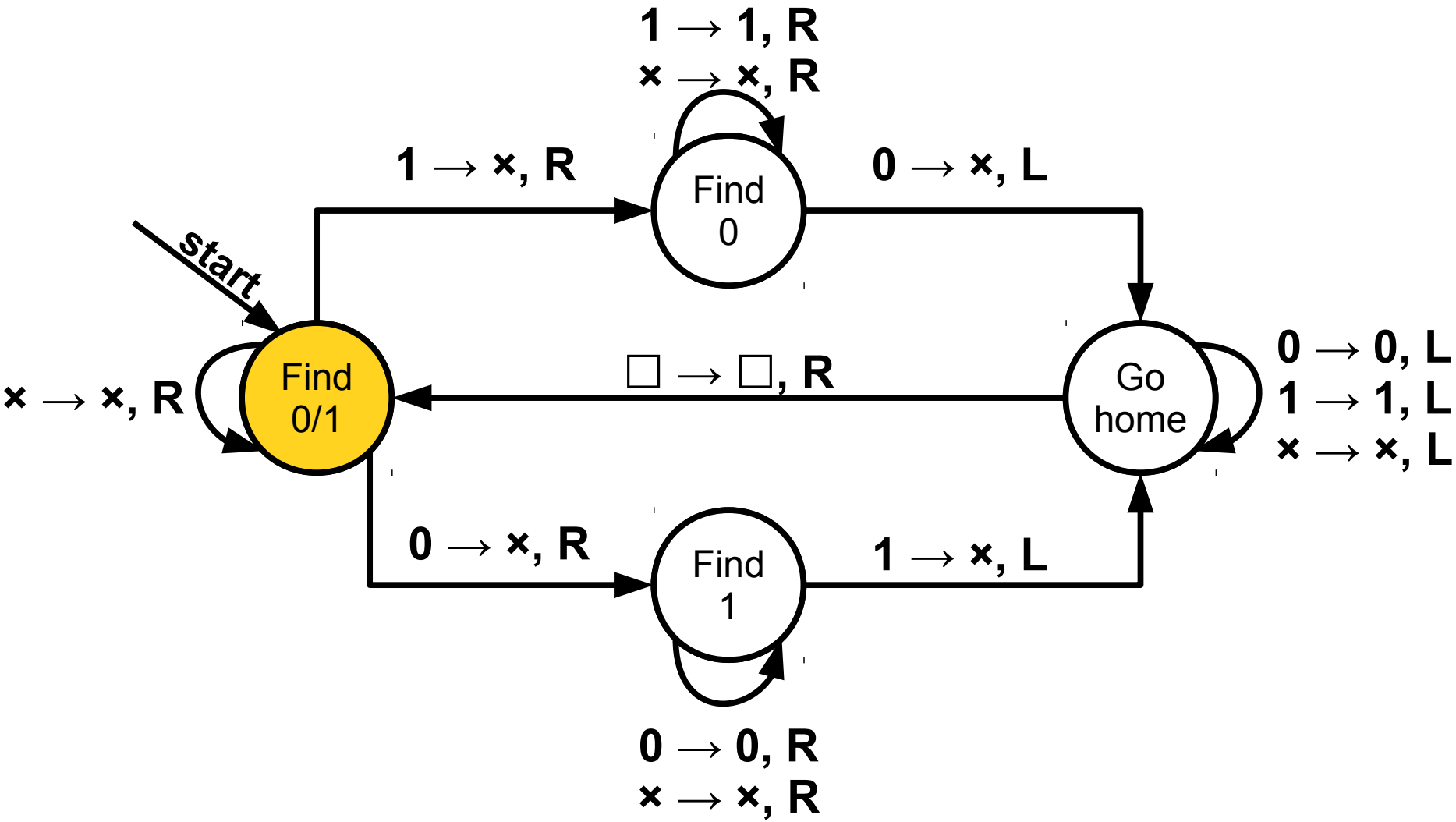
1 → 1, R
× → ×, R
1 → ×, R
0 → ×, L
start
Find 0
Find 0/1
× → ×, R
□ → □, R
Go home
0 → 0, L
1 → 1, L
× → ×, L
0 → ×, R
Find 1
1 → ×, L
0 → 0, R
× → ×, R

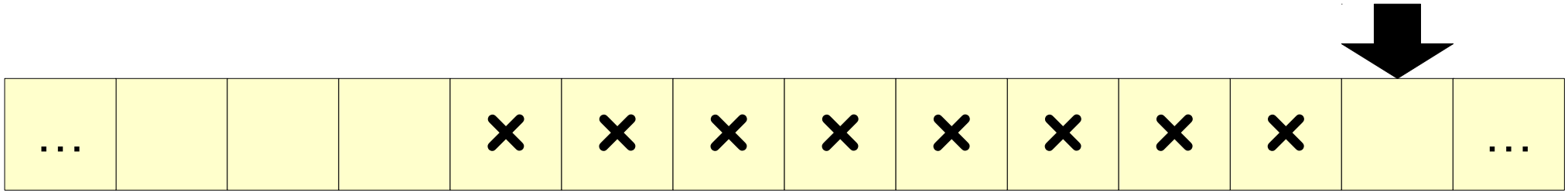
…
×
×
×
×
×
×
×
×
×
…

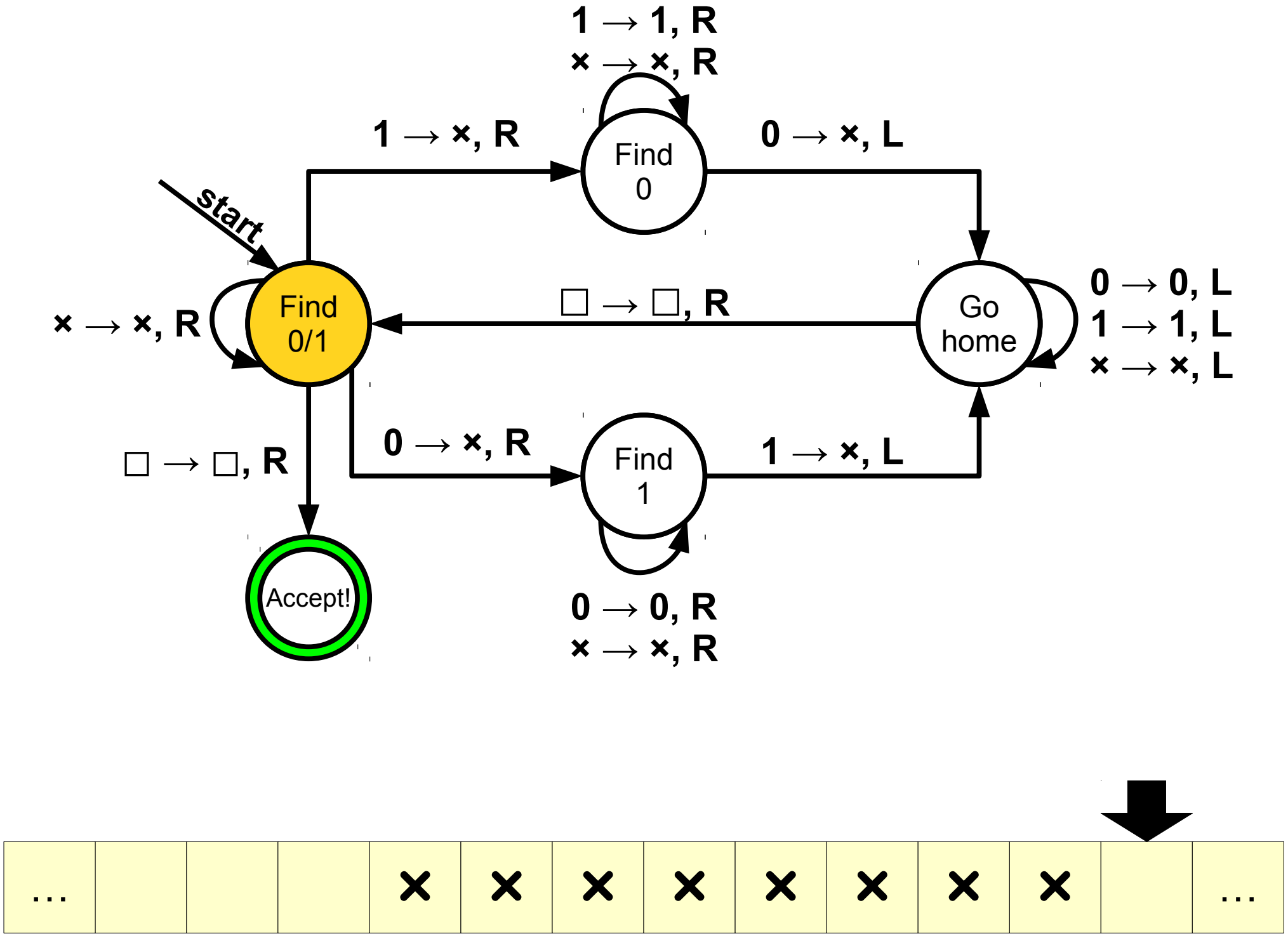
1 → 1, R
× → ×, R
1 → ×, R
Find 0
0 → ×, L
start
Find 0/1
× → ×, R
□ → □, R
Go home
0 → 0, L
1 → 1, L
× → ×, L
0 → ×, R
Find 1
1 → ×, L
□ → □, R
Accept!
0 → 0, R
× → ×, R
…
×
…

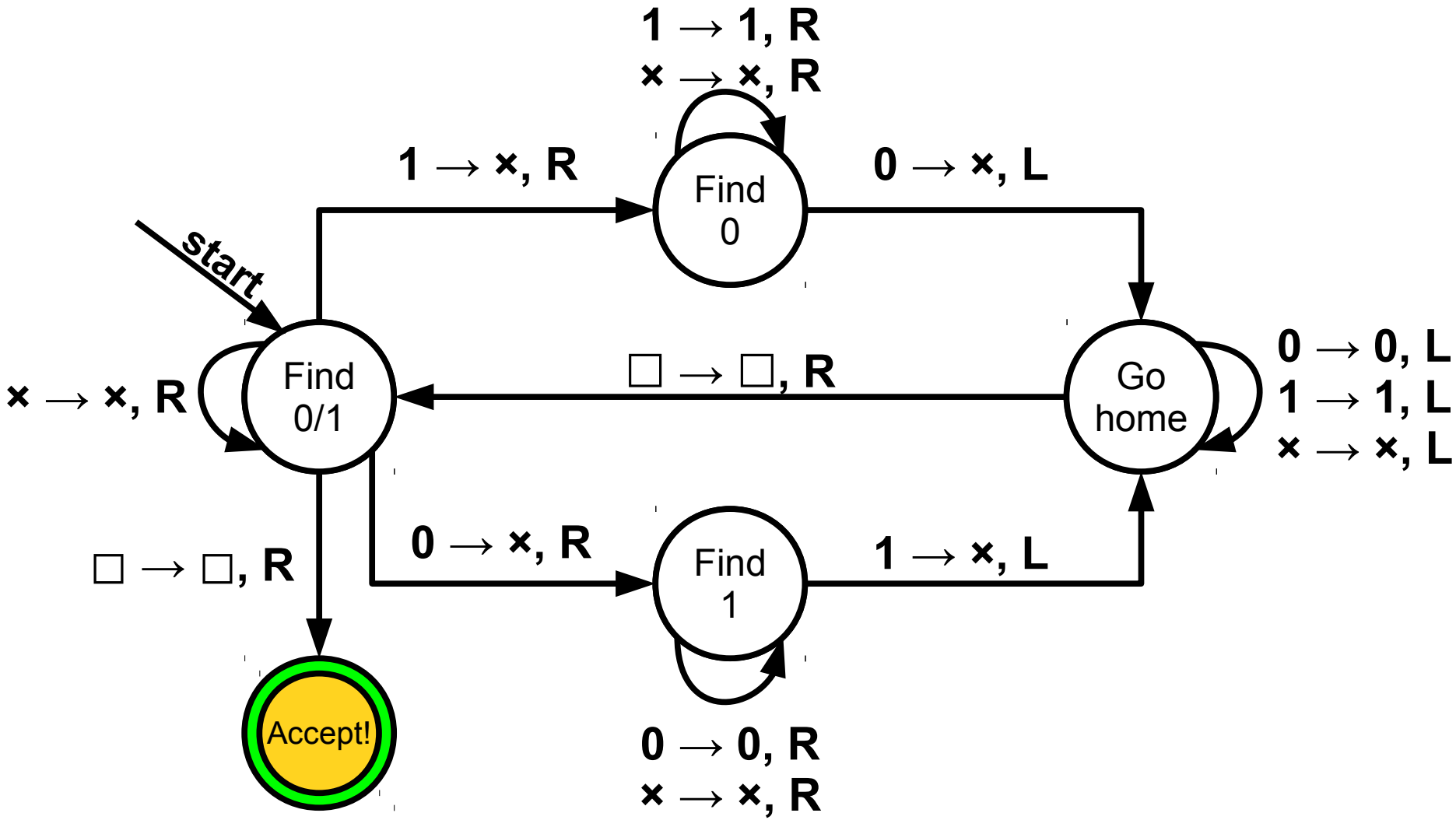
1 → 1, R
× → ×, R
1 → ×, R
Find 0
0 → ×, L
start
Find 0/1
× → ×, R
□ → □, R
Go home
0 → 0, L
1 → 1, L
× → ×, L
0 → ×, R
Find 1
1 → ×, L
□ → □, R
Accept!
0 → 0, R
× → ×, R

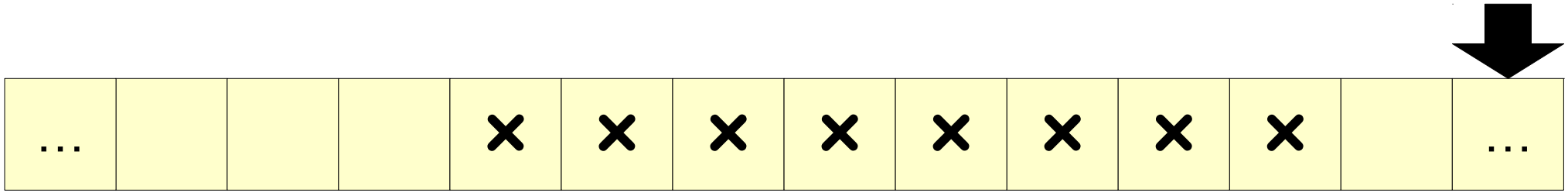
…
×
×
×
×
×
×
×
×
×
…

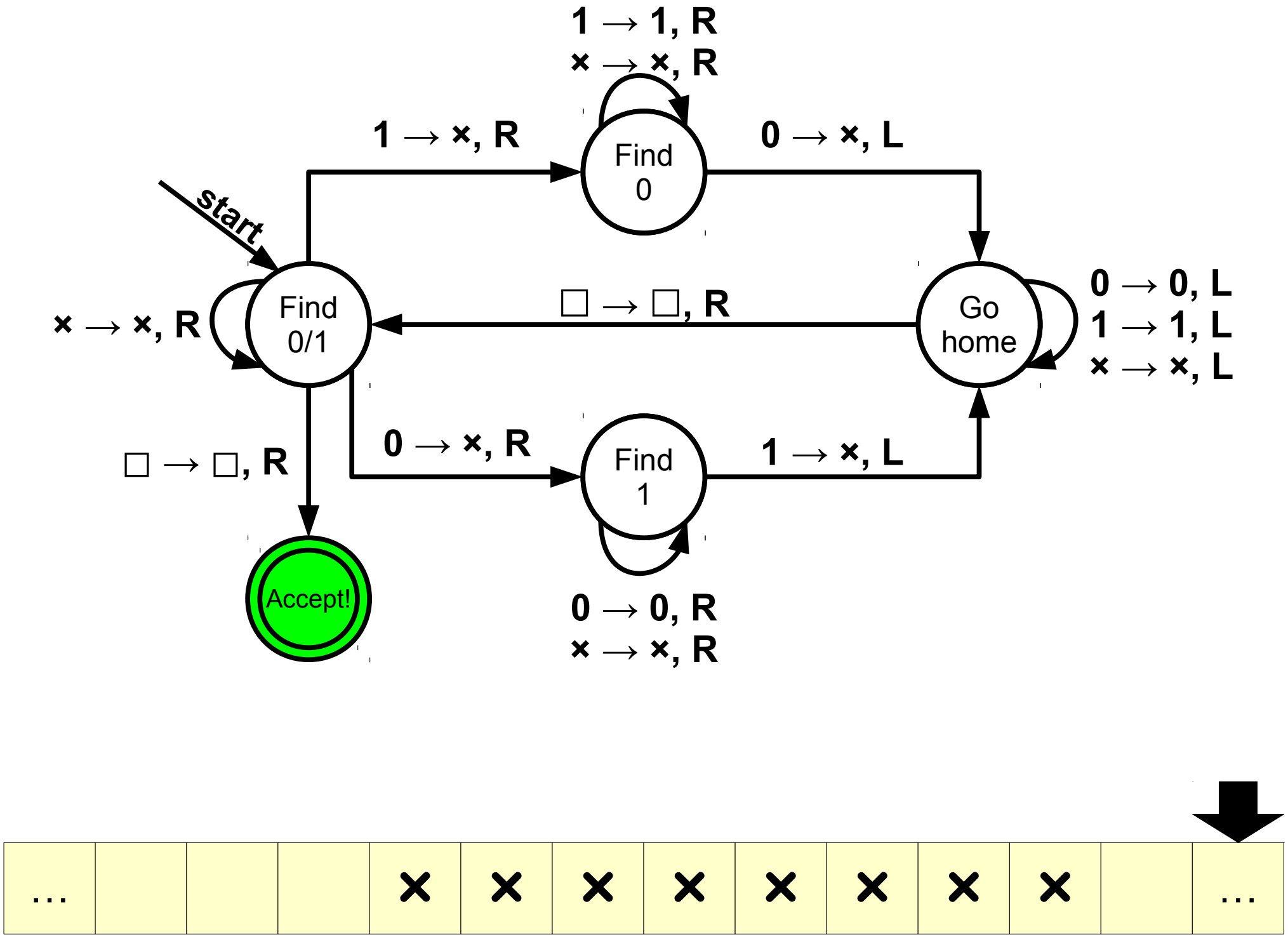
1 → 1, R
× → ×, R
1 → ×, R
Find 0
0 → ×, L
start
Find 0/1
× → ×, R
□ → □, R
Go home
0 → 0, L
1 → 1, L
× → ×, L
□ → □, R
0 → ×, R
Find 1
1 → ×, L
Accept!
0 → 0, R
× → ×, R
…
×
×
×
×
×
×
×
×
…

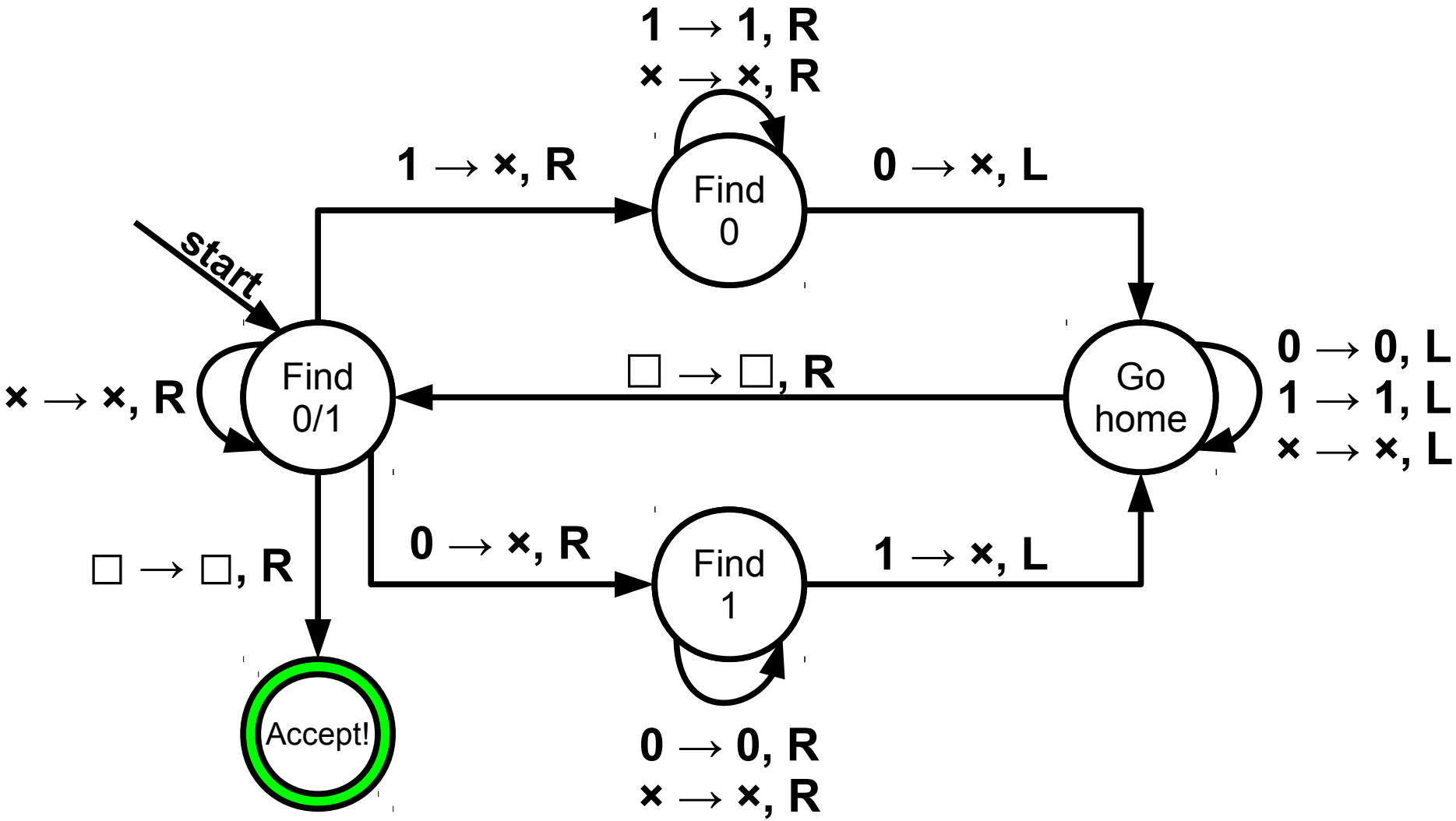
1 → 1, R
× → ×, R
1 → ×, R
Find 0
0 → ×, L
start
Find 0/1
× → ×, R
□ → □, R
Go home
0 → 0, L
1 → 1, L
× → ×, L
0 → ×, R
Find 1
1 → ×, L
□ → □, R
Accept!
0 → 0, R
× → ×, R

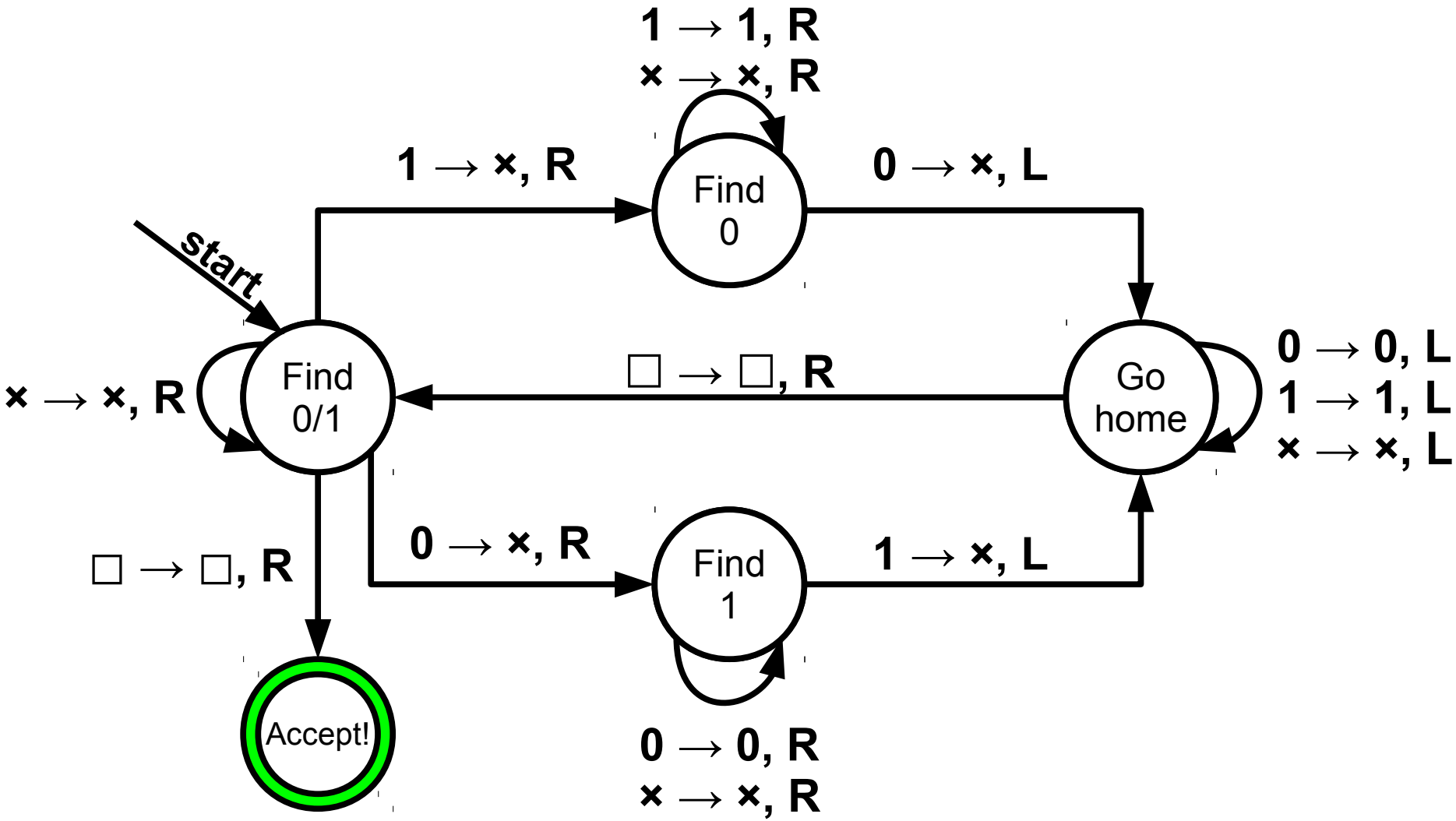

Going forward, we'll ignore the missing transitions and pretend they implicitly reject.

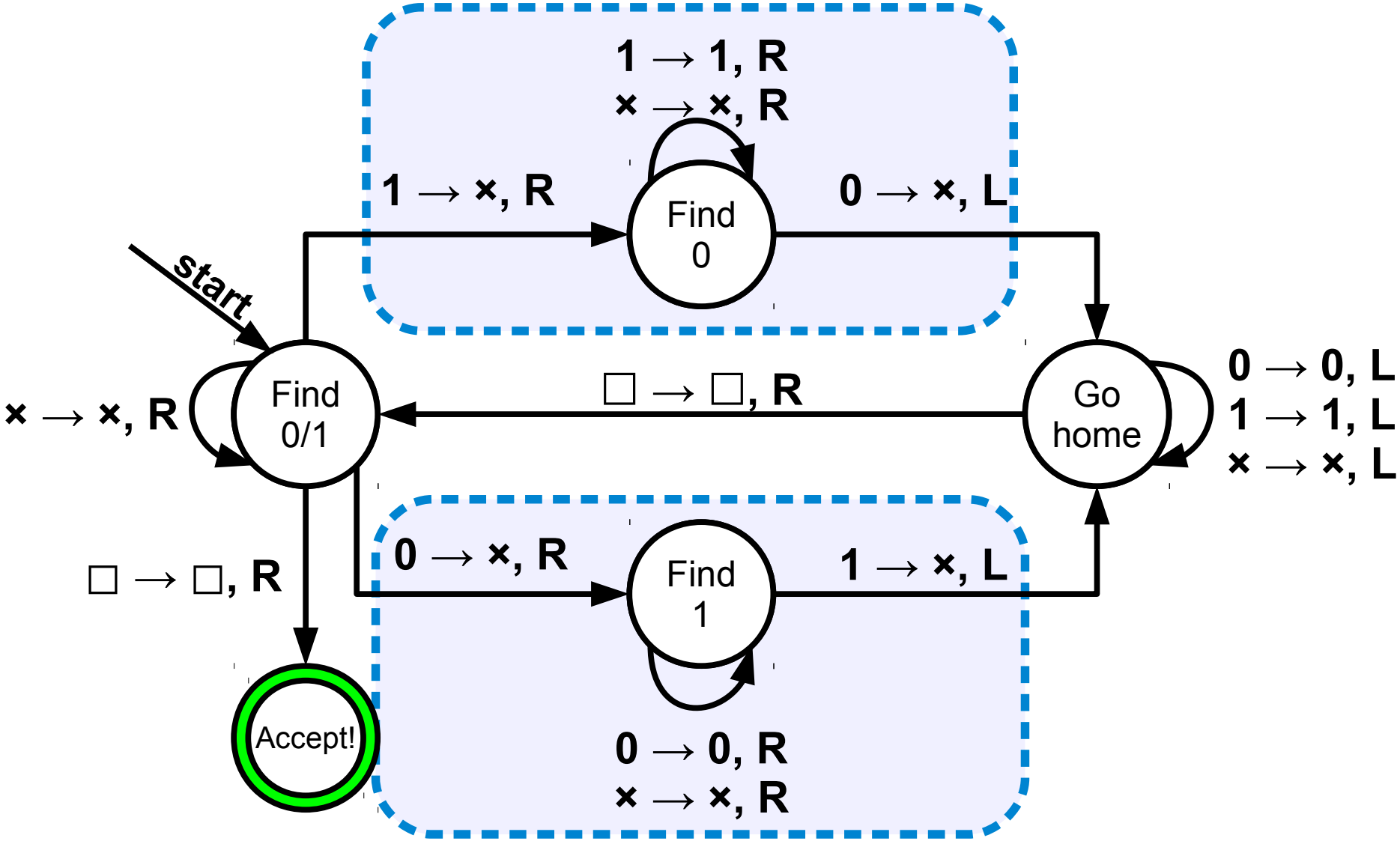
1 → 1, R
× → ×, R
1 → ×, R
Find 0
0 → ×, L
start
Find 0/1
× → ×, R
□ → □, R
Go home
0 → 0, L
1 → 1, L
× → ×, L
0 → ×, R
Find 1
1 → ×, L
□ → □, R
Accept!
0 → 0, R
× → ×, R

Constant Storage

- Sometimes, a TM needs to remember some additional information that can't be put on the tape.
- In this case, you can use similar techniques from DFAs and introduce extra states into the TM's finite-state control.
- The finite-state control can only remember one of finitely many things, but that might be all that you need!

Time-Out for Announcements!

Problem Set Seven

- Problem Set Seven is due this Friday.
- Have questions? Stop by office hours or ask on Piazza!

Problem Set Five

- We accidentally factored the extra credit problem into the point total on PS5.
- We're aware of this and will fix it when computing final grades.
- Sorry about that... though we do recommend that you stress out less about details like this! ☺

Second Midterm Exam

- The second midterm exam is next **Monday, November 16** from 7PM – 10PM.
  - Locations TBA.
- Cumulative exam with a focus on material from Lectures 10 – 18 and PS4 – 6.
  - Main focus is on graphs, the pigeonhole principle, induction, finite automata, regular expressions, and regular languages.
  - Will *not* test the Myhill-Nerode theorem, CFGs, or Turing machines.
  - Since everything builds on itself in this course, the exam may require topics from earlier in the course.
- As before, you get one double-sided, 8.5” × 11” sheet of notes during the exam.

Second Midterm Exam

- As before, we'll be releasing practice problems all throughout this week.
- We have a practice midterm exam coming up on Wednesday from 7PM – 10PM, location TBA.
- Let us know if there are any particular topics you want more practice with. We can then release extra practice problems on those topics.

Your Questions

“How do I go from relying on grades for self-esteem and validation to truly believing that they don't define my worth? On an intellectual level I understand this, but I don't know how to take it to heart.”

This is a good question. And it's a hard one to answer. I asked Jerry Cain about this one and got some really good advice. For starters, let's just admit that this is hard. I was terrible at this. Jerry Cain admits that he wasn't good at it either and that it took a while to get his footing.

One of the reasons this is hard is that you can't just do this in a vacuum. You need to figure out what you consider important. If you have something that really matters to you that isn't just your grades, it is a lot easier to start caring less about your GPA and more about who you are as a person. Jerry also mentioned a good point: the *classes* here at Stanford aren't the most valuable part of the experience. The *learning* is valuable, but the personal connections you make are the most valuable. Keep that in mind – don't let your education get in the way of your learning.

And go talk to Jerry. Like, seriously.

“It's easy to feel like an impostor at a place like Stanford. Did you ever feel that way? Has it gotten better/worse as you got older?”

Oh totally. Freshman year was really rough for me, and I'm going to politely decline to elaborate on why that was.

I think that most people, when encountering a major change in environment, go through a period like that. At Google, for example, they specifically watch out for employees in the period from 6ish to 12ish months after joining, since many of them run into the same sorts of problems that you hit when arriving at Stanford.

It absolutely gets better once you get settled in, have a better sense of what normalcy is, have a better sense of how you fit into the bigger picture, and have a sense of what people actually expect out of you. It takes time to get into a rhythm like this, but trust me, once you do, you're going to feel a lot better.

“Who are some people in your life who you know are truly happy/fulfilled? (Doesn't have to be specific names, but more descriptions about who they are/what they are doing). What makes them feel that way? What did it take for them to get there?”

Wow, you're asking hard questions today. ☺

Happiness and fulfillment are a process rather than a goal. You can do things that will make you happier, and you can do things that will make you feel more fulfilled, but you'll never achieve “complete” happiness and fulfillment.

The people I know who are happiest and who are most fulfilled are most typically people who have a really good sense of what's important to them. They know what not to worry about and what they need to focus their efforts on. I'm thinking of relatives, colleagues, friends, etc. who have something in their life that drives them to do things that matter to them.

“What's your favorite movie?”

Finally, a question on a lighter note. Here's a few of my favorites:

Epic:

“Seven Samurai” – some of the best storytelling, ever.
“Lawrence of Arabia” – it's amazing how well this holds up.

Drama:

“The Lives of Others” – bring a box of Kleenex for the end.
“Twelve Angry Men” – they just don't make movies like this anynmore.

Romantic:

“Casablanca” – there's a reason why it's on everyone's “best” lists.
“Amelie” – this movie is just too cute.

Comedy:

“Brazil” – technically a comedy, but extremely unsettling.
“Dr. Strangelove” – this gets better the more I watch it.
“Little Miss Sunshine” – it is so hard to stop laughing while watching this.

Horror:

“The Babadook” – the feminist take on horror movies. It's amazing.

Back to CS103!

Another TM Design

- Consider the following language over $\Sigma = \{\mathtt{0}, \mathtt{1}\}$:

$$L = \{\mathtt{0}^n\mathtt{1}^m \mid n, m \in \mathbb{N} \text{ and } m \text{ is a multiple of } n\}$$

- Is this language regular?
- How might we design a TM for this language?

An Observation

- We can recursively describe when one number m is a multiple of n:
  - If $m = 0$, then m is a multiple of n.
  - Otherwise, m is a multiple of n iff $m - n$ is a multiple of n.
- **Idea:** Repeatedly subtract n from m until m becomes zero (good!) or drops below zero (bad!)

The Challenge

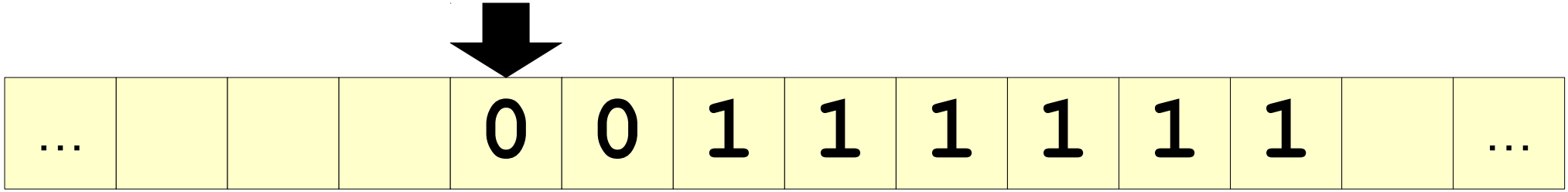

One Solution

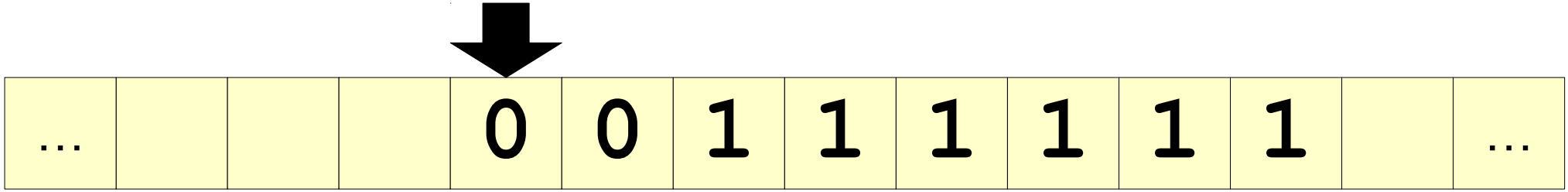

One Solution

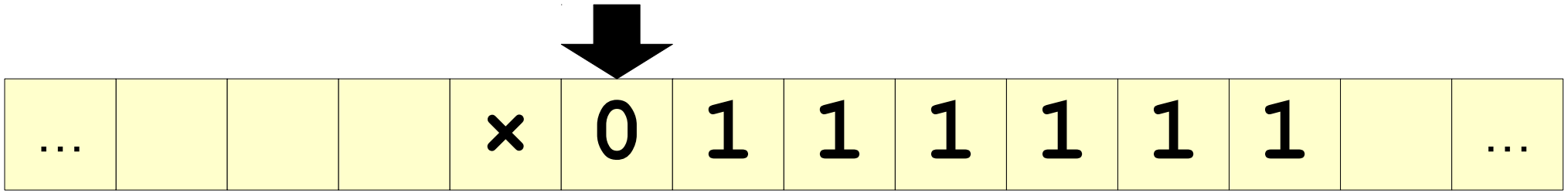

One Solution

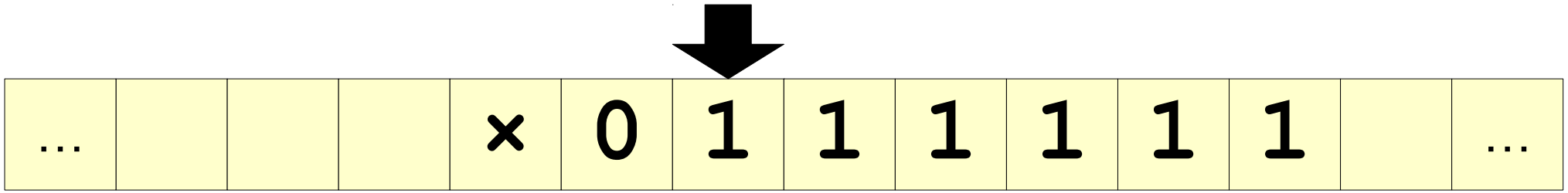

One Solution

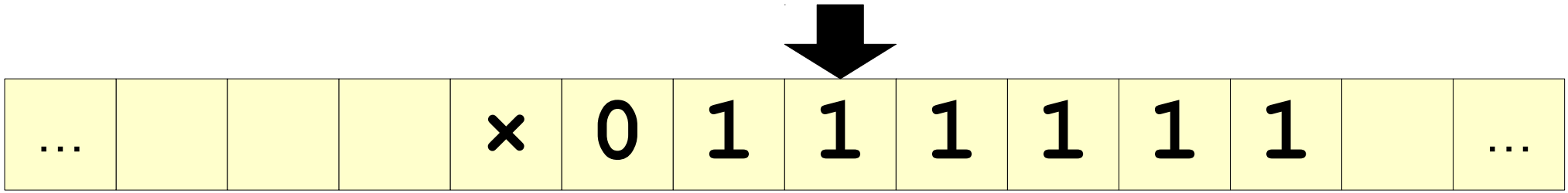

One Solution

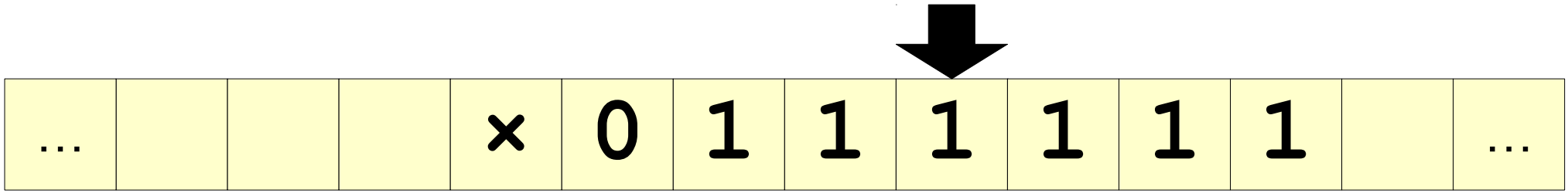

One Solution

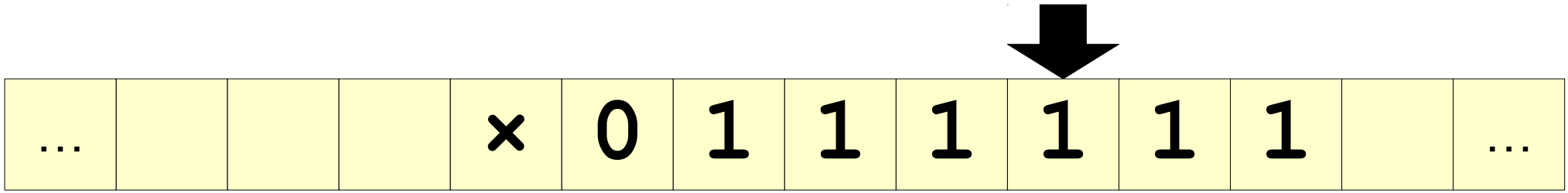

One Solution

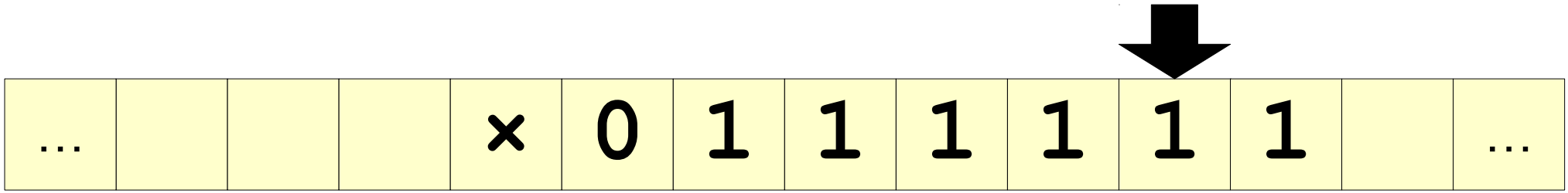

One Solution

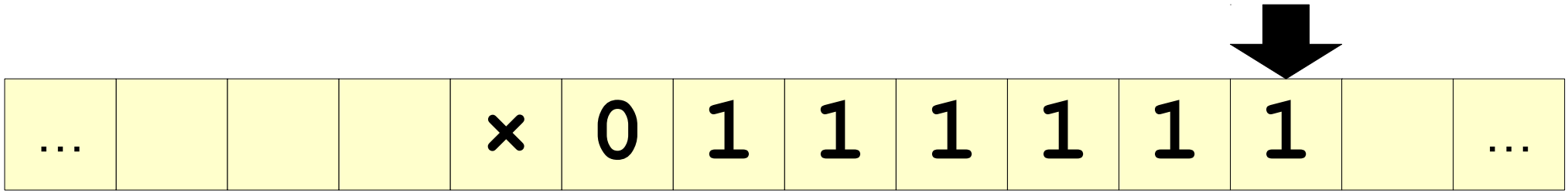

One Solution

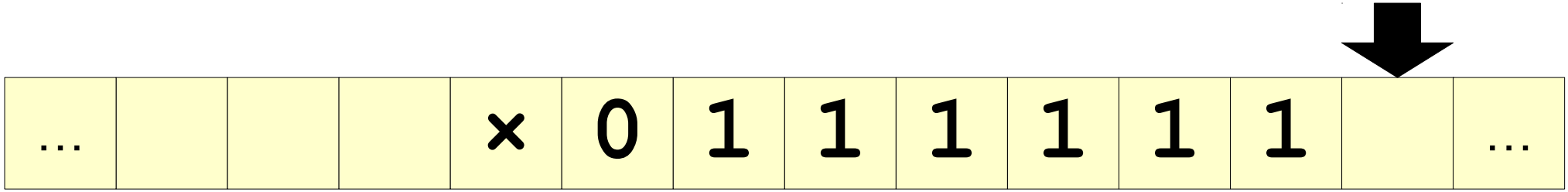

One Solution

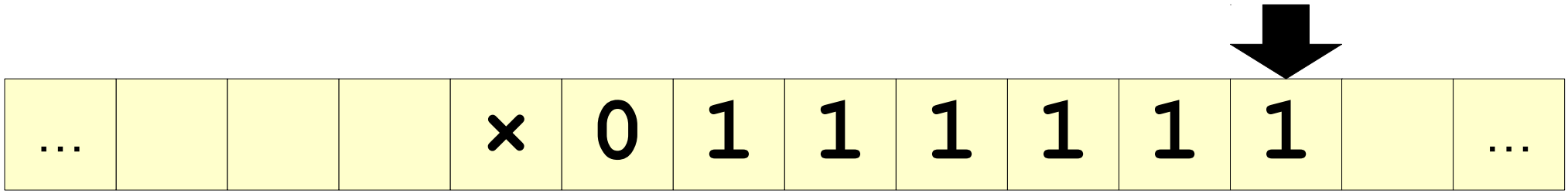

One Solution

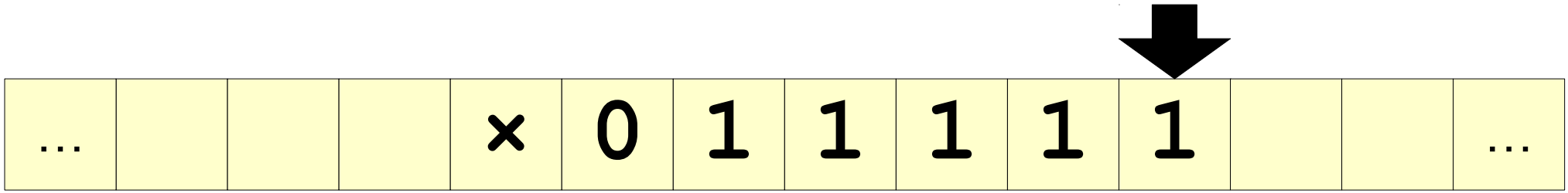

One Solution

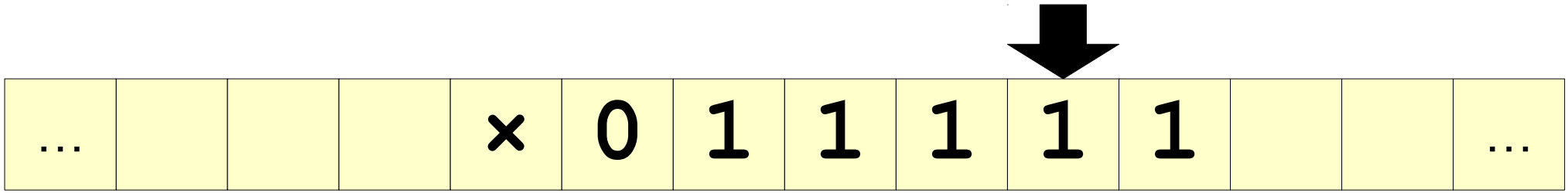

One Solution

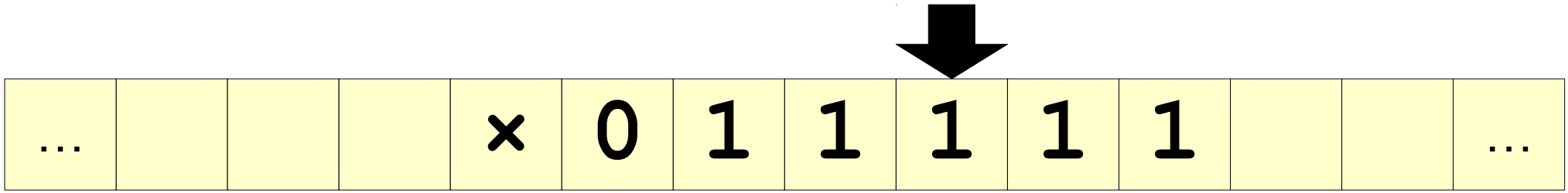

One Solution

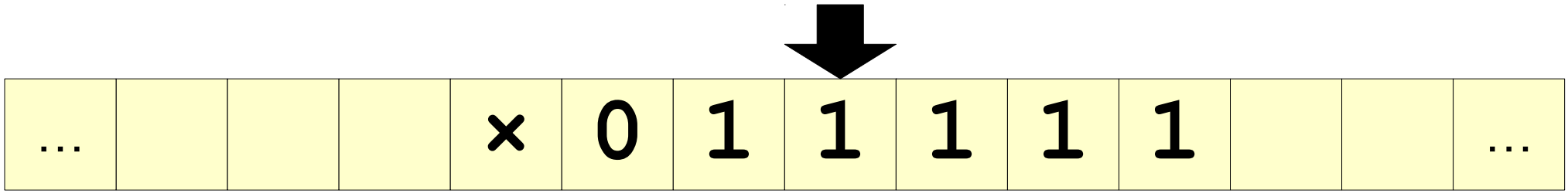

One Solution

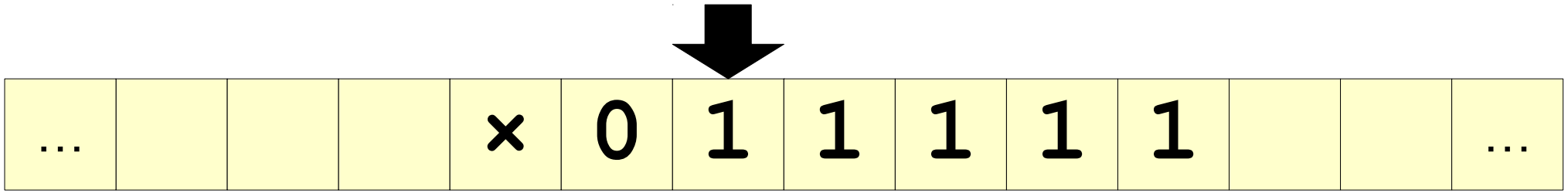

One Solution

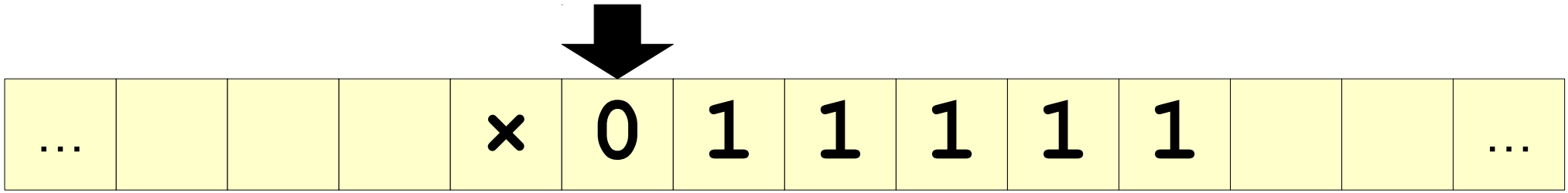

One Solution

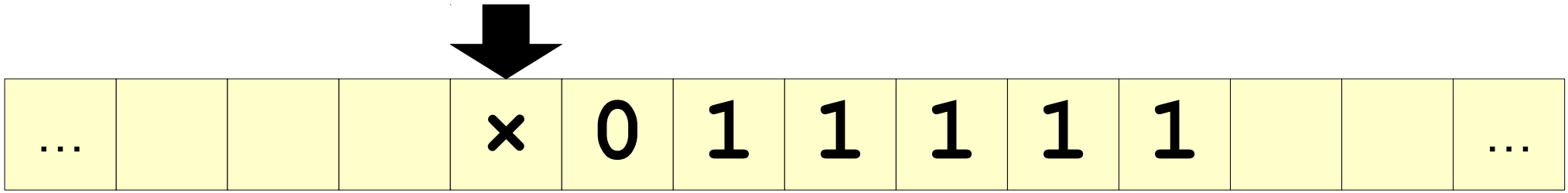

One Solution

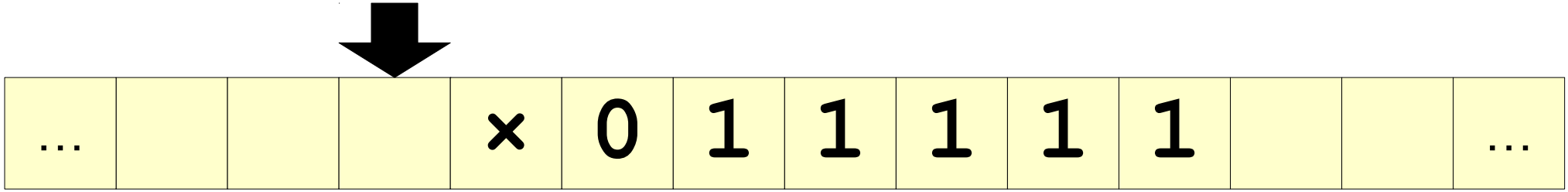

One Solution

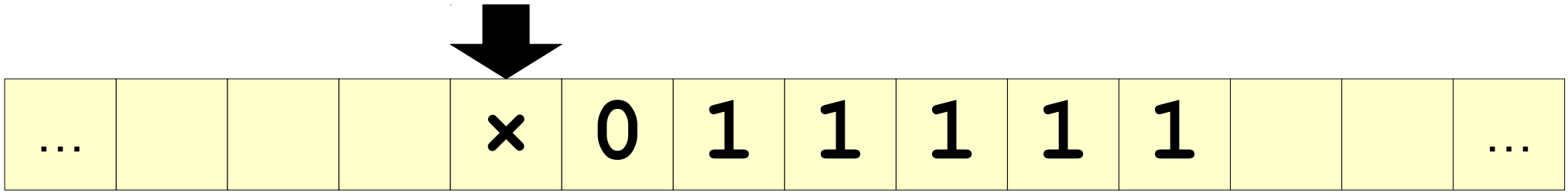

One Solution

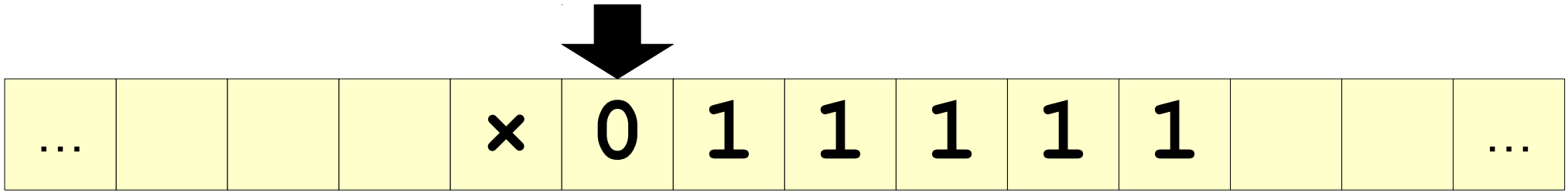

One Solution

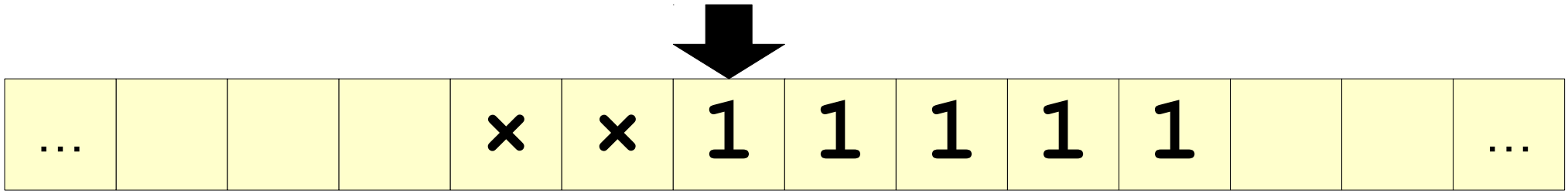

One Solution

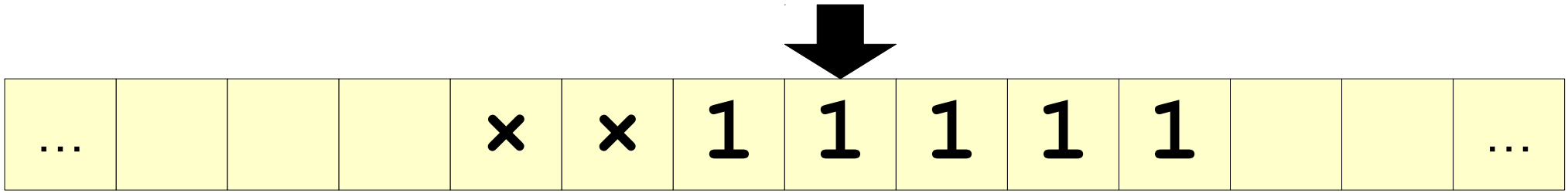

One Solution

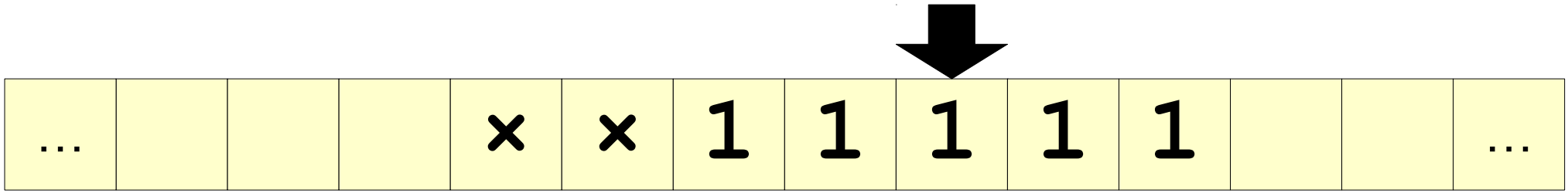

One Solution

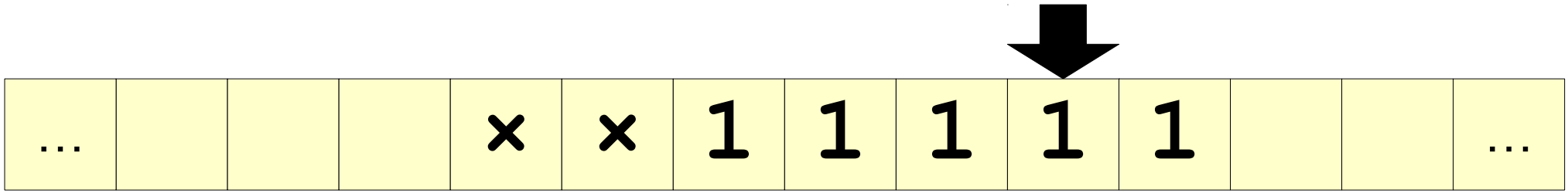

One Solution

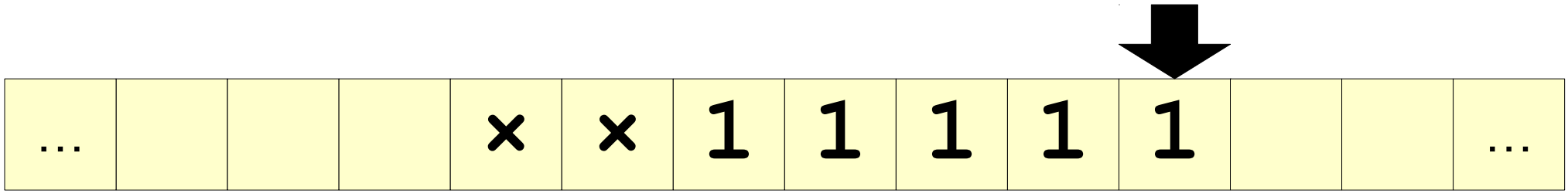

One Solution

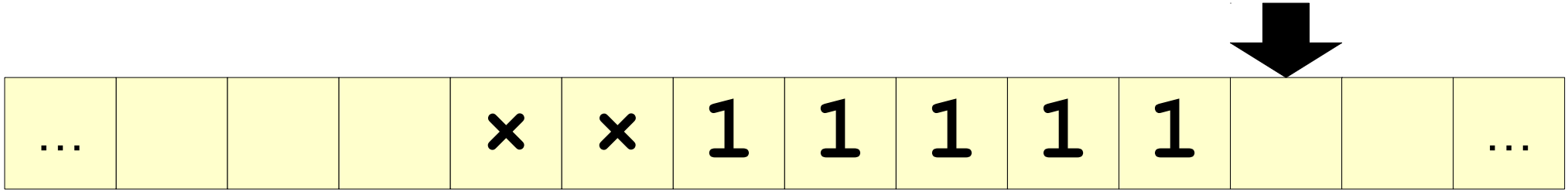

One Solution

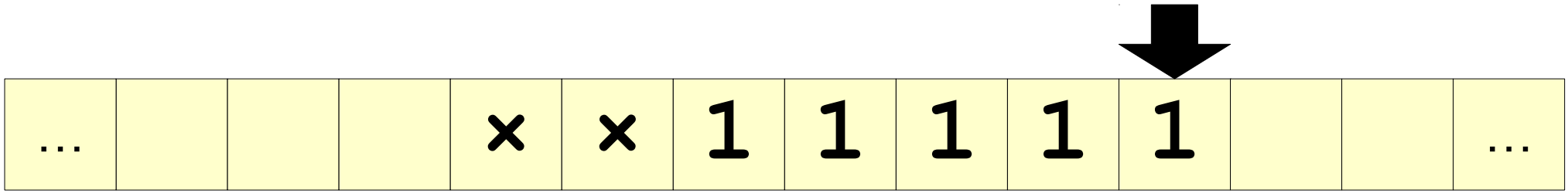

One Solution

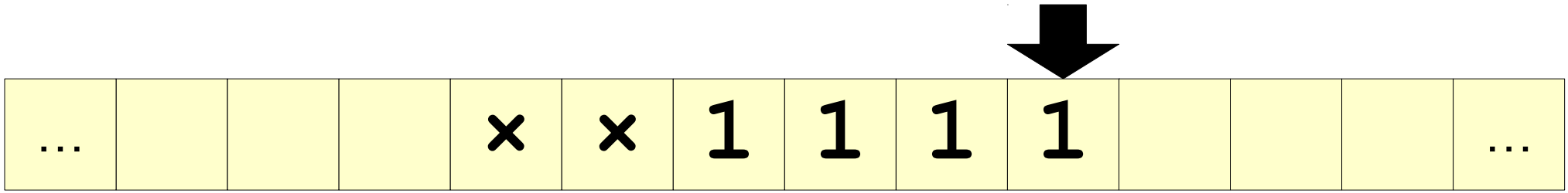

One Solution

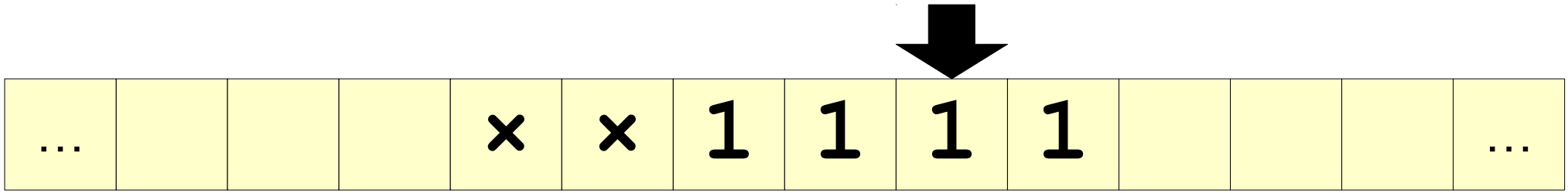

One Solution

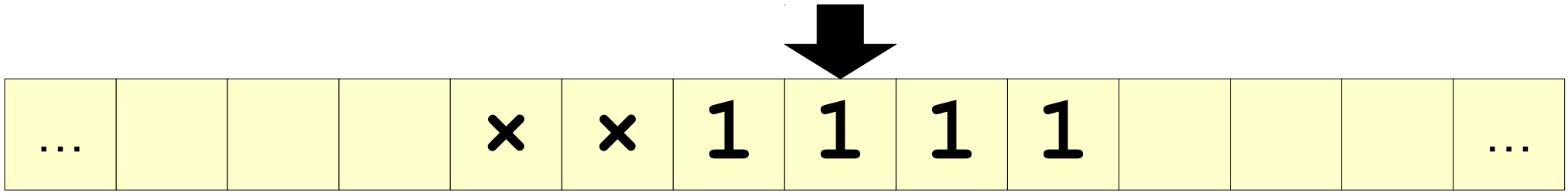

One Solution

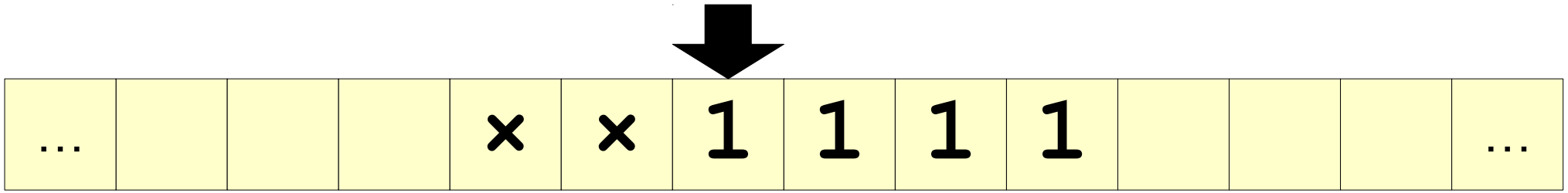

One Solution

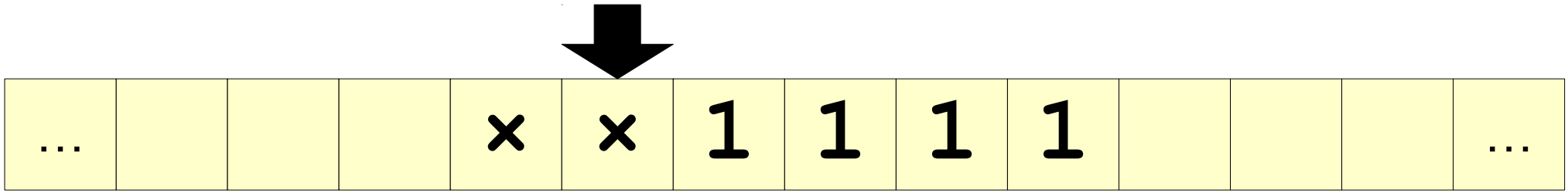

One Solution

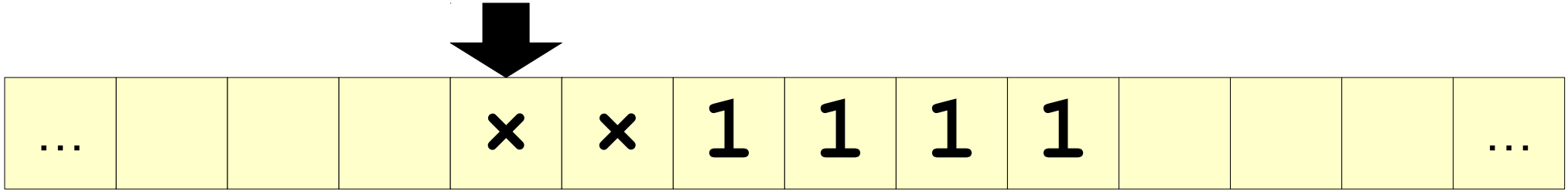

One Solution

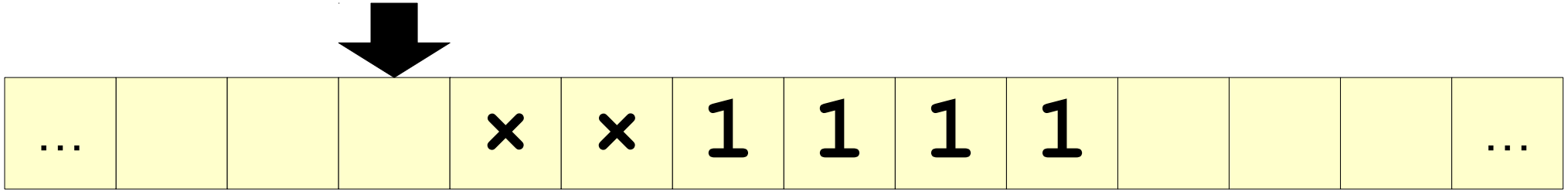

One Solution

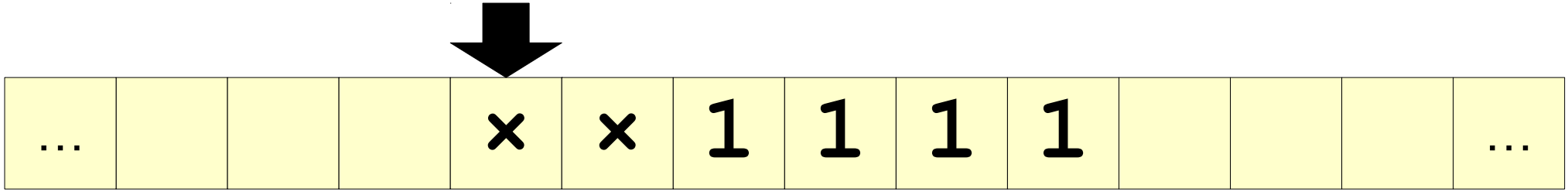

One Solution

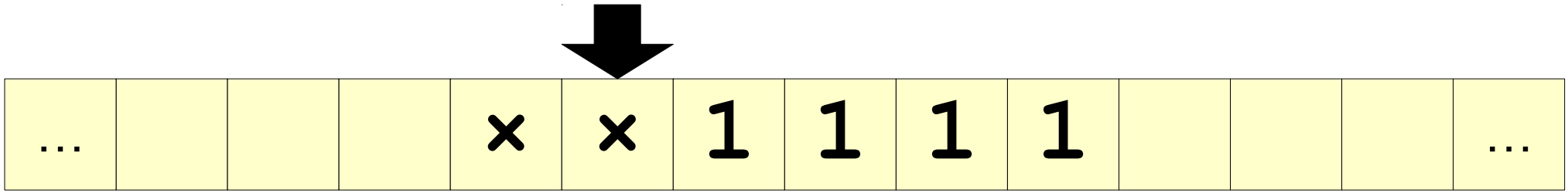

One Solution

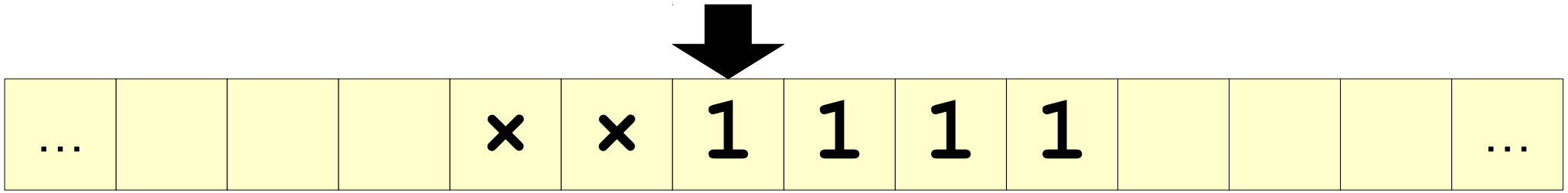

One Solution

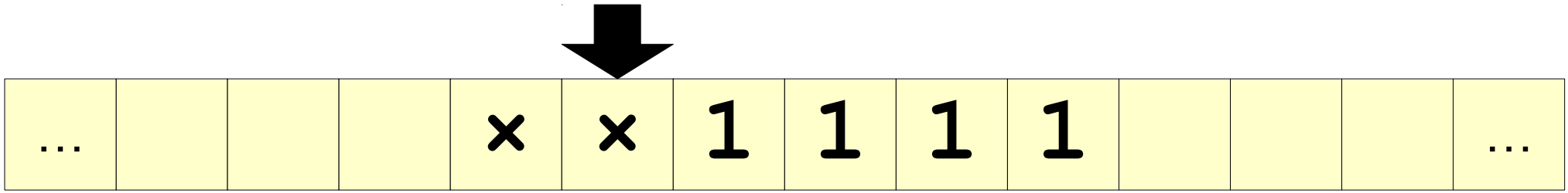

One Solution

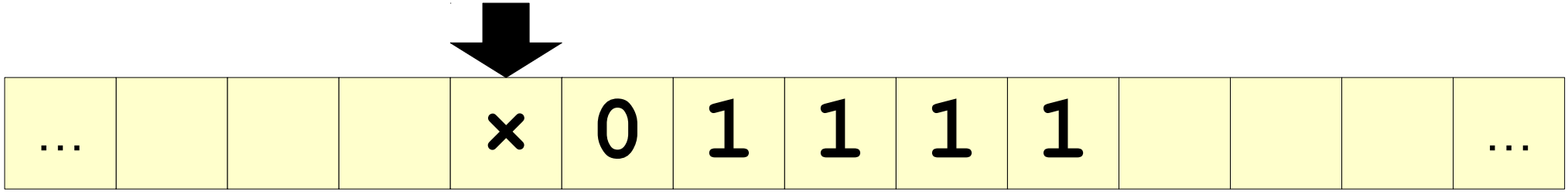

One Solution

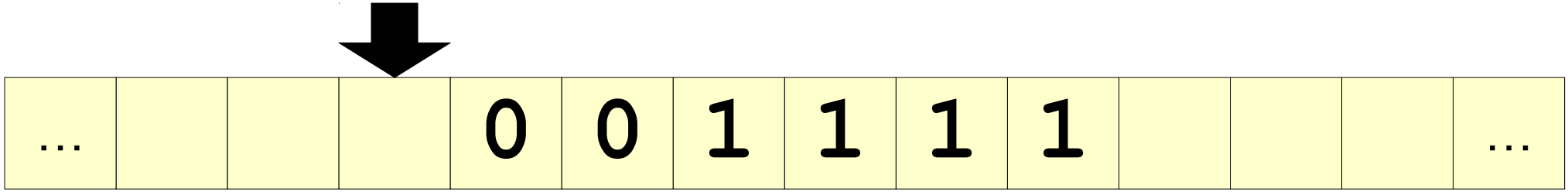

One Solution

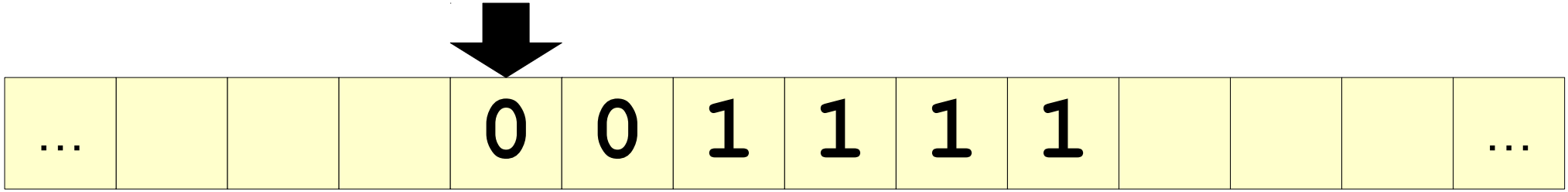

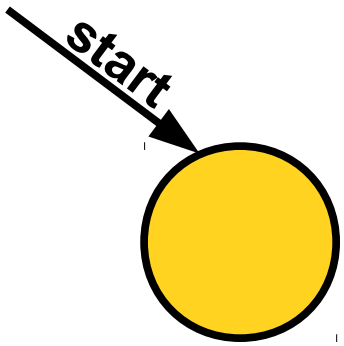
start

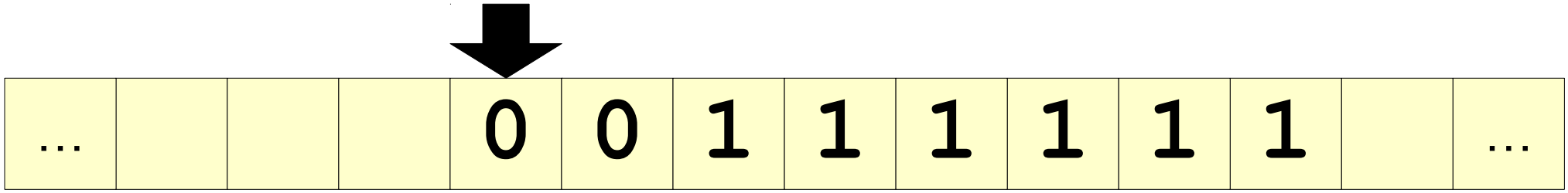
...
0
0
1
1
1
1
1
1
...

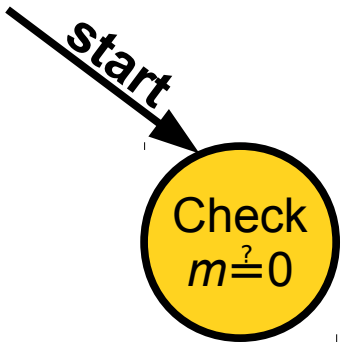

...				0	0	1	1	1	1	1	1		...

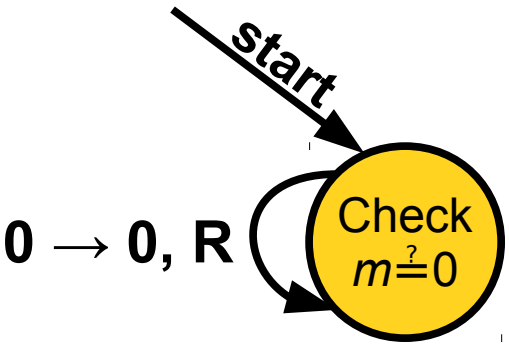

…				0	0	1	1	1	1	1	1		…

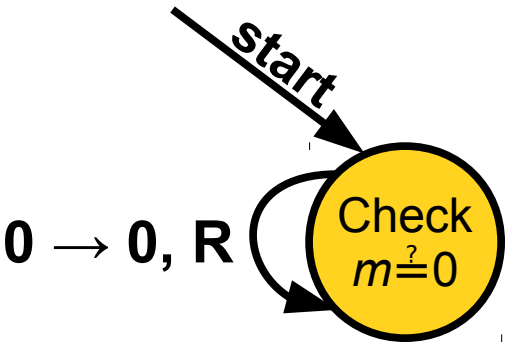
start
0 → 0, R
Check
m ≟ 0

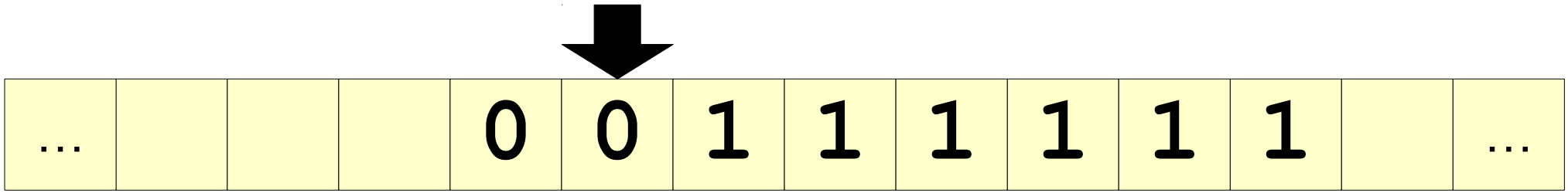
...
0
0
1
1
1
1
1
1
...

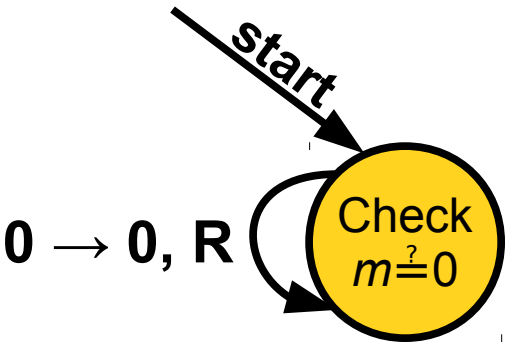

…				0	0	1	1	1	1	1	1		…

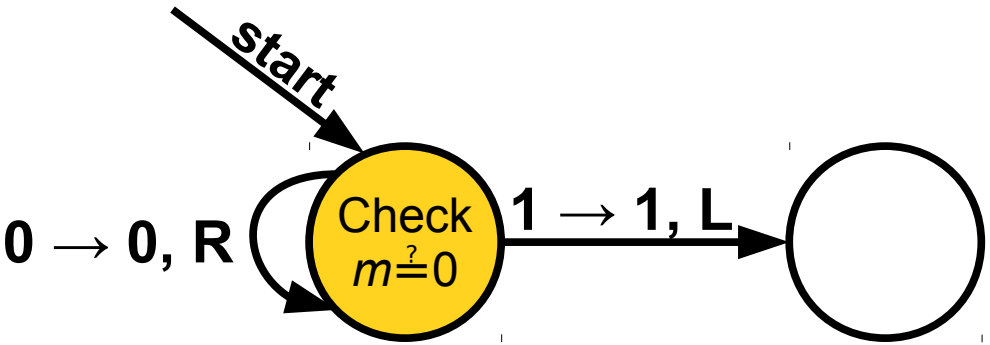
start
0 → 0, R
Check
m ≟ 0
1 → 1, L

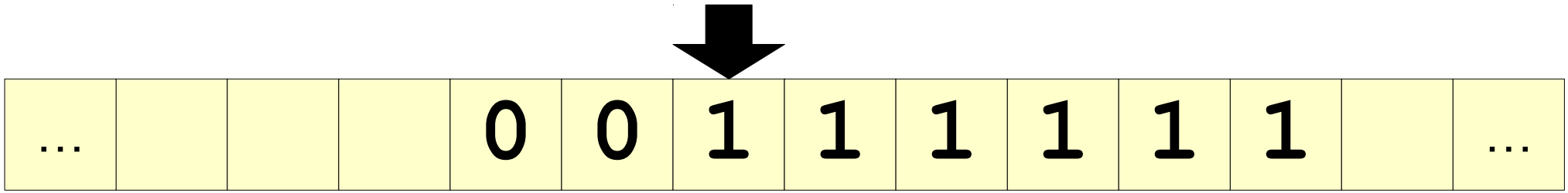
...
0
0
1
1
1
1
1
1
...

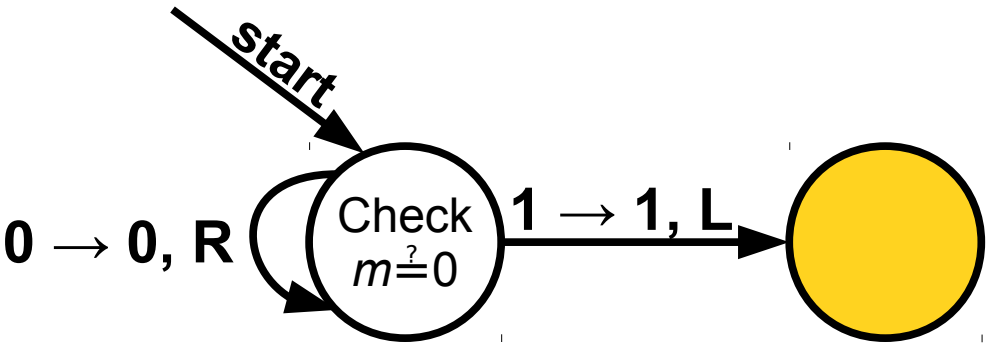
start
0 → 0, R
Check
m ≟ 0
1 → 1, L

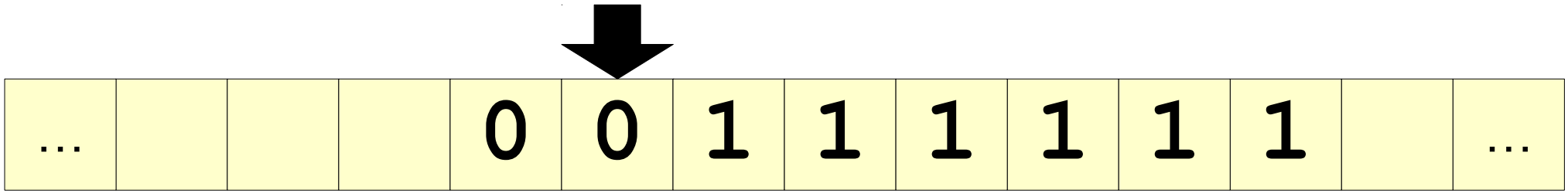
...
0
0
1
1
1
1
1
1
...

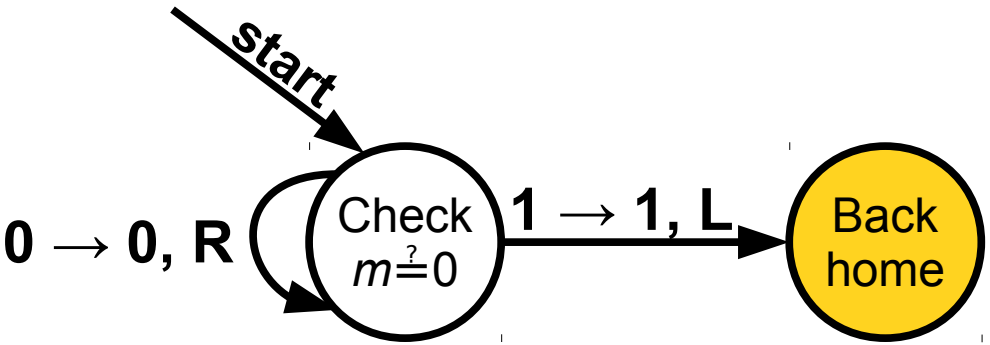
start
0 → 0, R
Check
m ≟ 0
1 → 1, L
Back
home

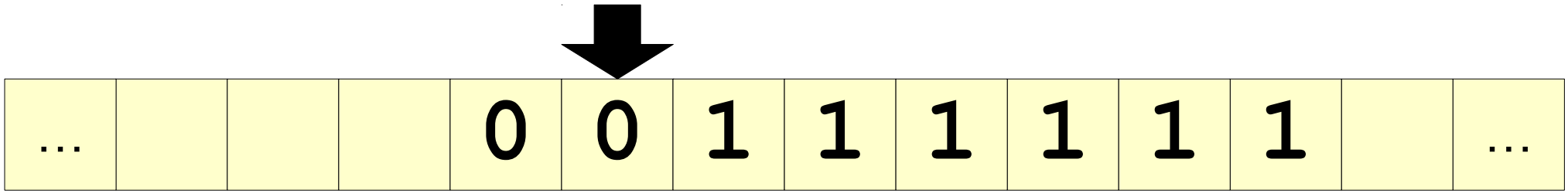
...
0
0
1
1
1
1
1
1
...

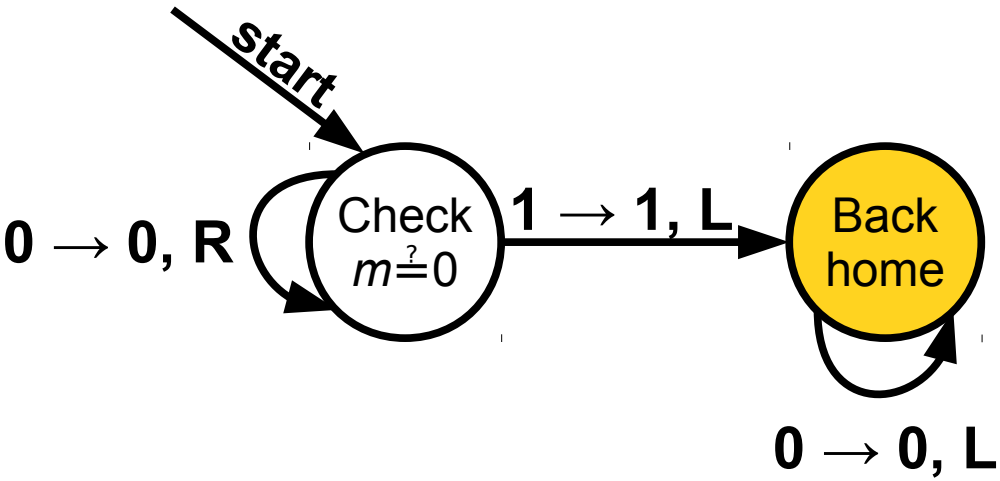
start
0 → 0, R
Check
m ≟ 0
1 → 1, L
Back
home
0 → 0, L

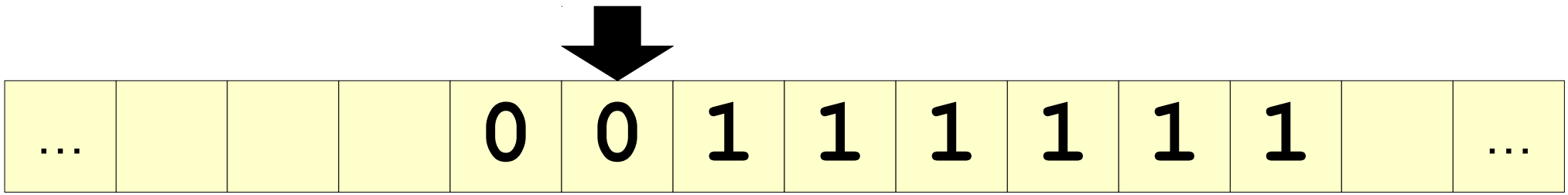
...
0
0
1
1
1
1
1
1
...

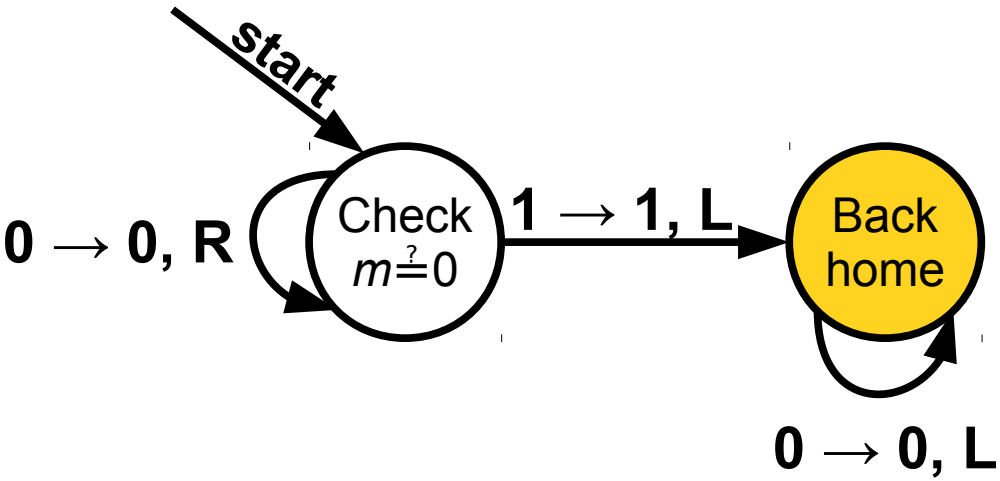
start
Check
$m \stackrel{?}{=} 0$
0 → 0, R
1 → 1, L
Back
home
0 → 0, L

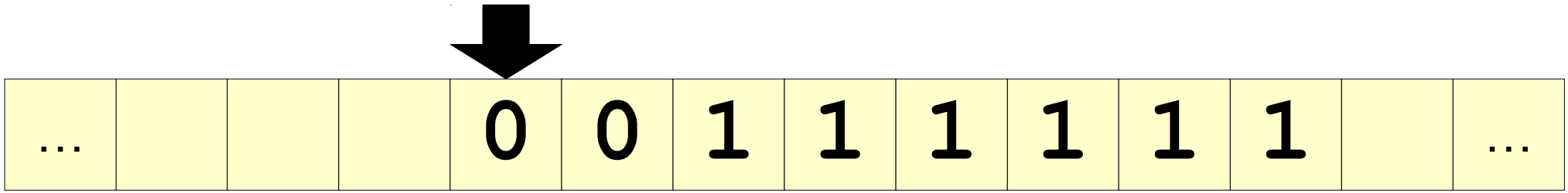
...
0 0 1 1 1 1 1 1
...

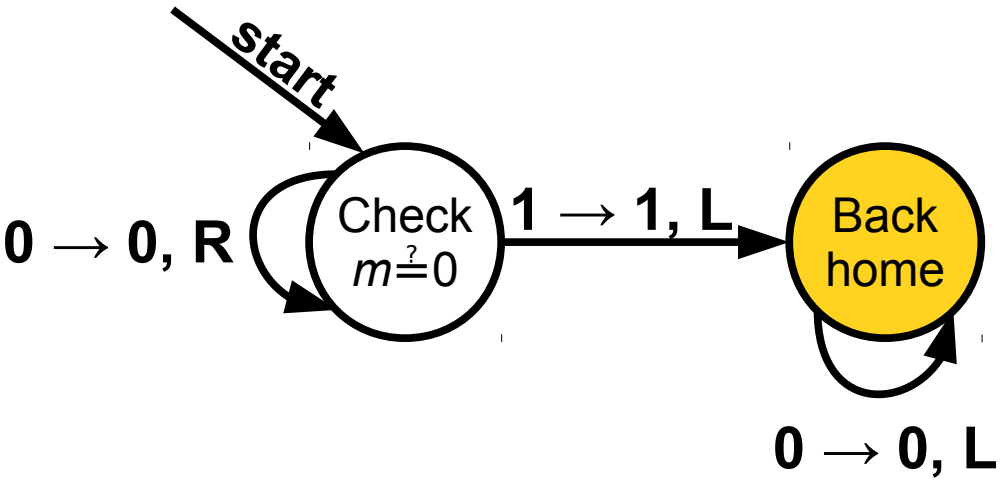
start
0 → 0, R
Check
m ≟ 0
1 → 1, L
Back
home
0 → 0, L

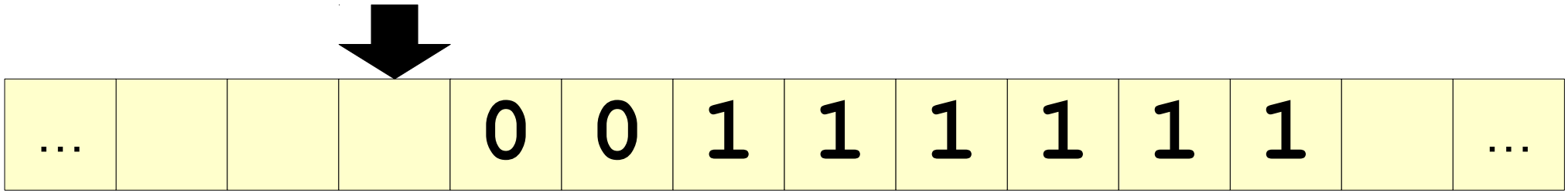
...
0 0 1 1 1 1 1 1
...

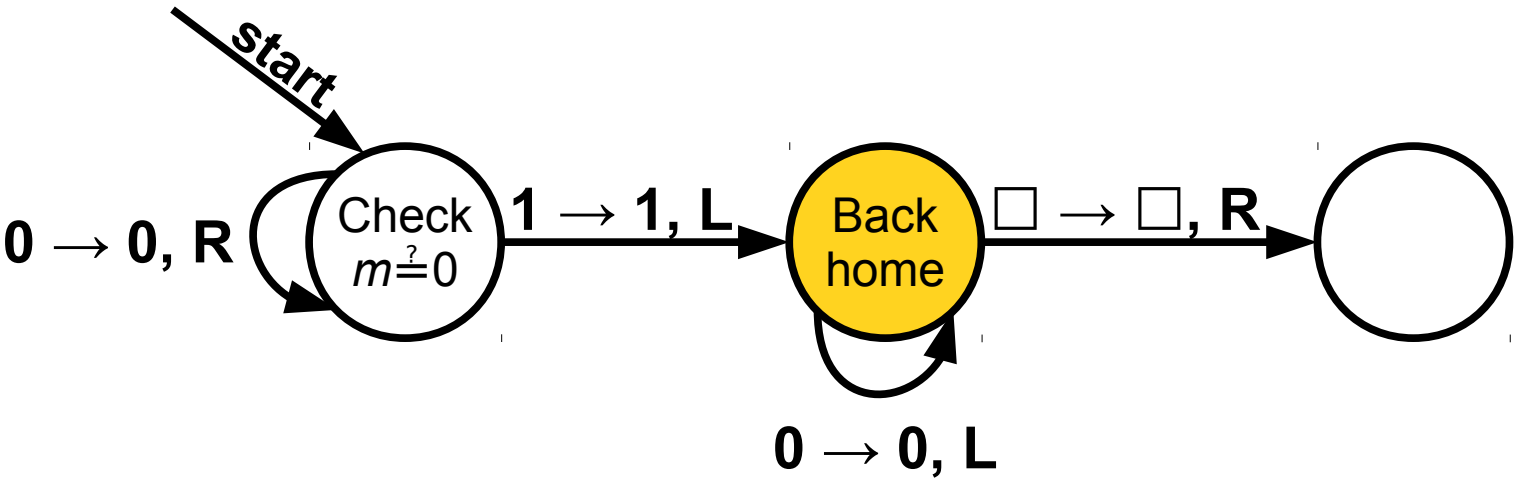
start
Check
$m \stackrel{?}{=} 0$
0 → 0, R
1 → 1, L
Back
home
□ → □, R
0 → 0, L

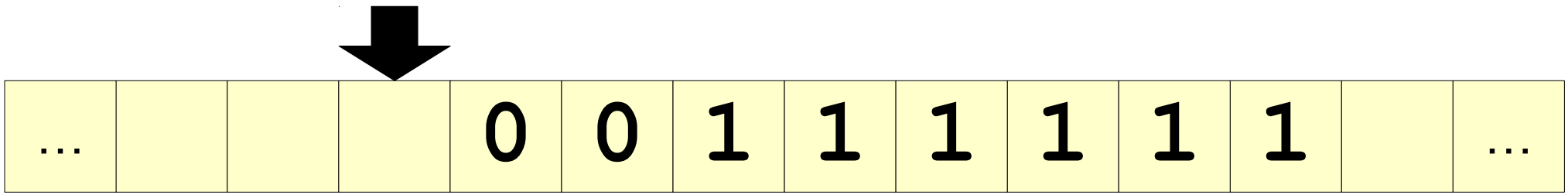
...
0 0 1 1 1 1 1 1
...

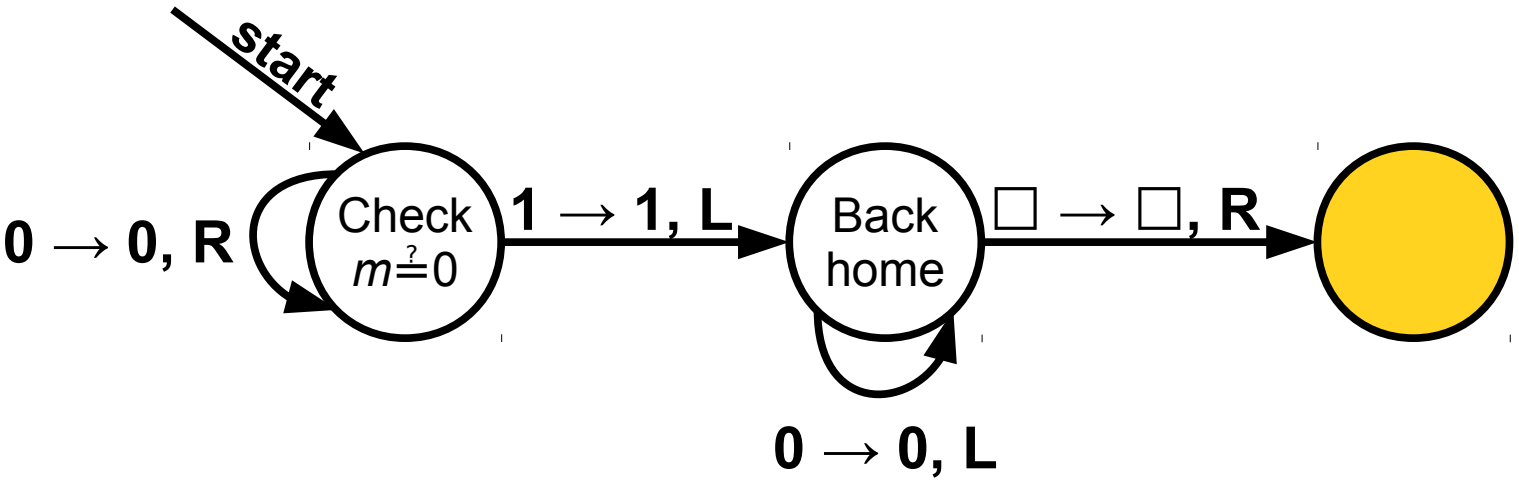
start
0 → 0, R
Check
m ≟ 0
1 → 1, L
Back
home
□ → □, R
0 → 0, L

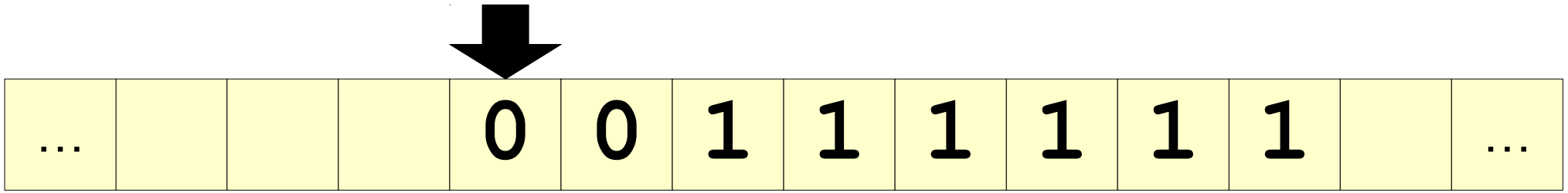
...
0
0
1
1
1
1
1
1
...

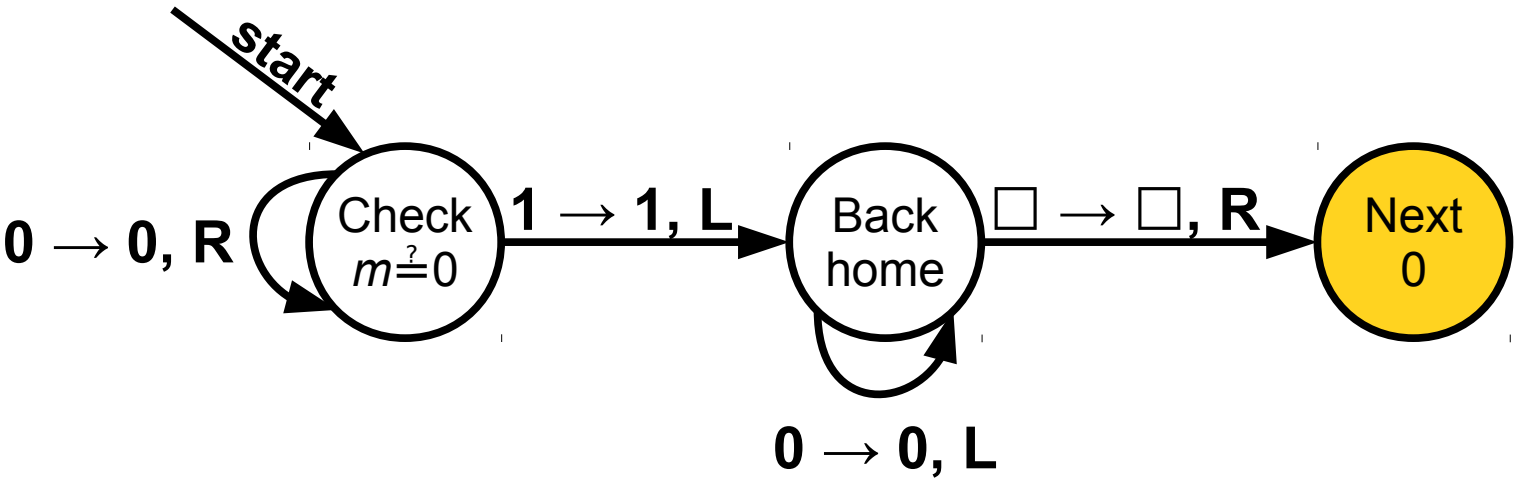
start
0 → 0, R
Check
m ≟ 0
1 → 1, L
Back
home
□ → □, R
Next
0
0 → 0, L

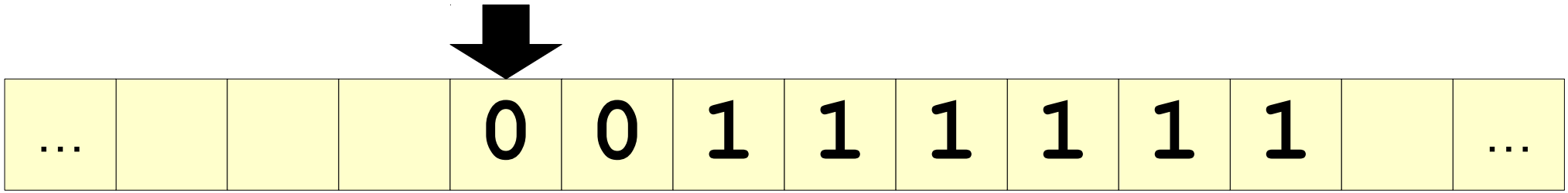
...
0
0
1
1
1
1
1
1
...

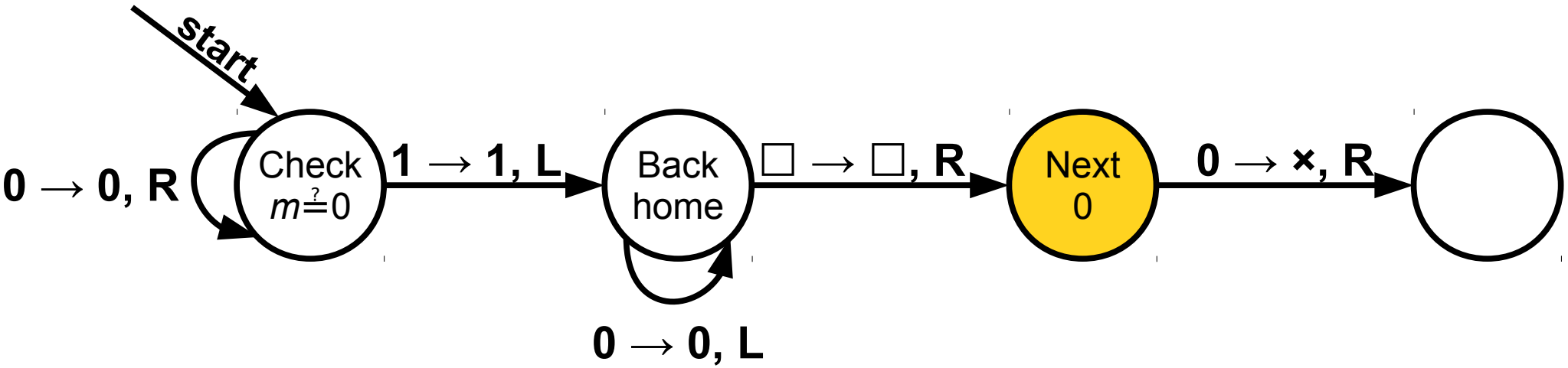
start
0 → 0, R
Check
m ≟ 0
1 → 1, L
Back
home
0 → 0, L
□ → □, R
Next
0
0 → ×, R

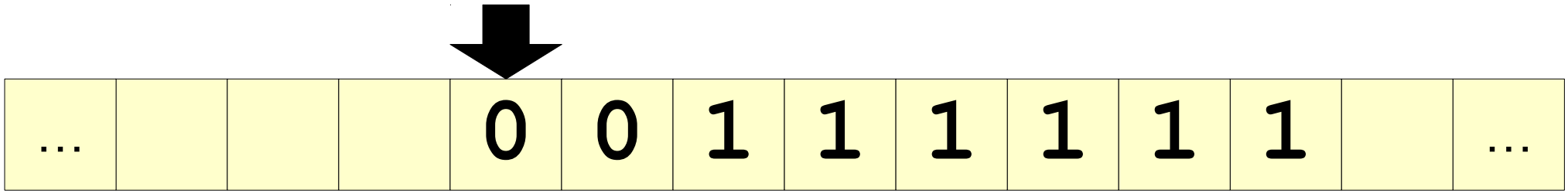
...
0 0 1 1 1 1 1 1
...

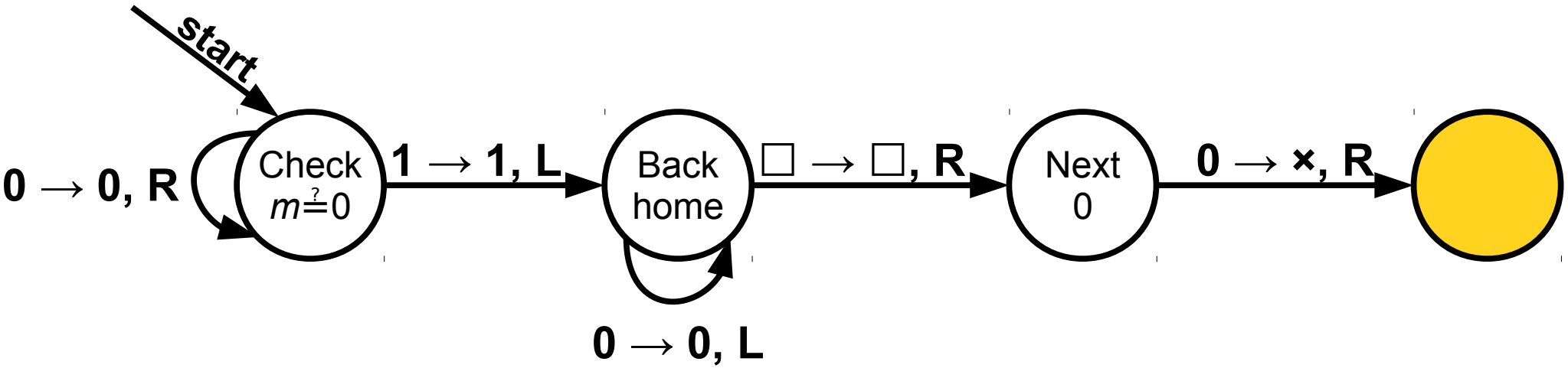
start
0 → 0, R
Check
m ≟ 0
1 → 1, L
Back
home
0 → 0, L
□ → □, R
Next
0
0 → ×, R

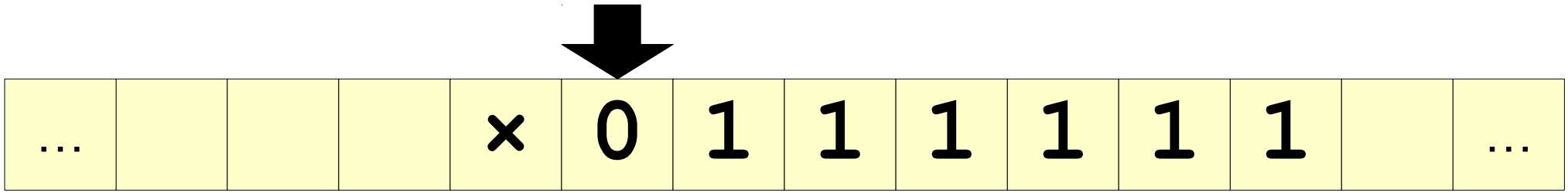
...
×
0
1
1
1
1
1
1
...

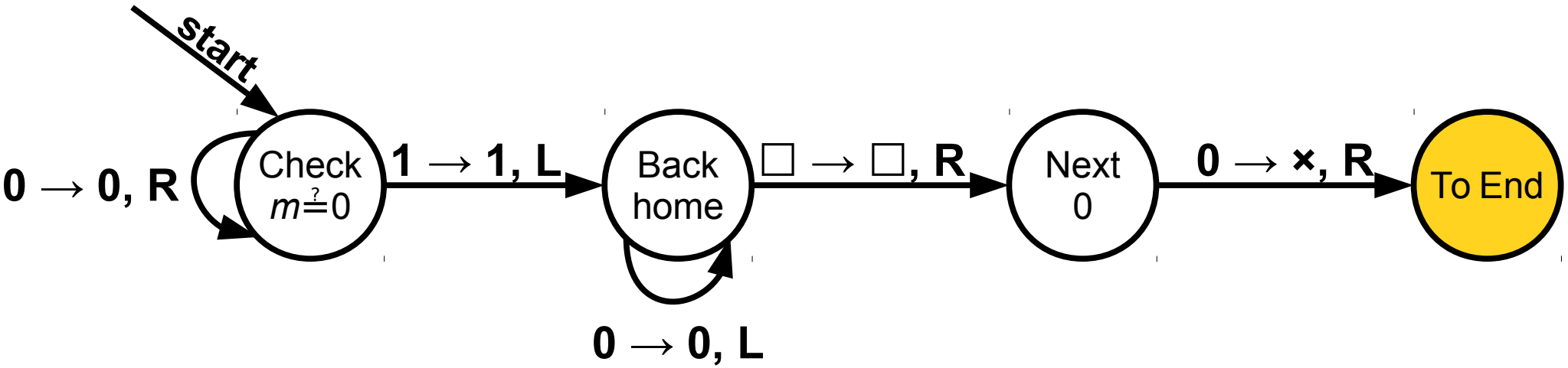
start
0 → 0, R
Check
m ≟ 0
1 → 1, L
Back
home
0 → 0, L
□ → □, R
Next
0
0 → ×, R
To End

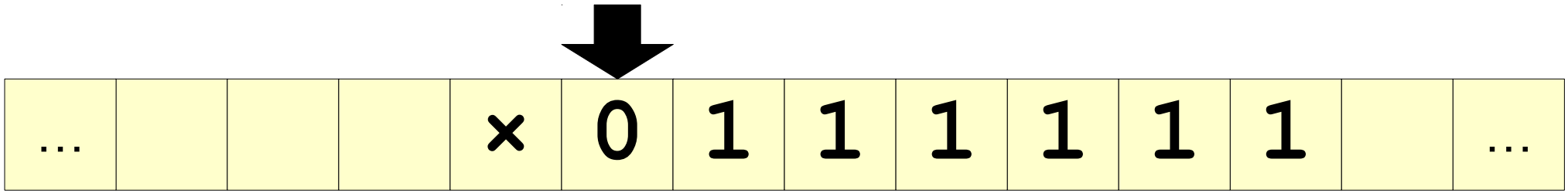
...
×
0
1
1
1
1
1
1
...

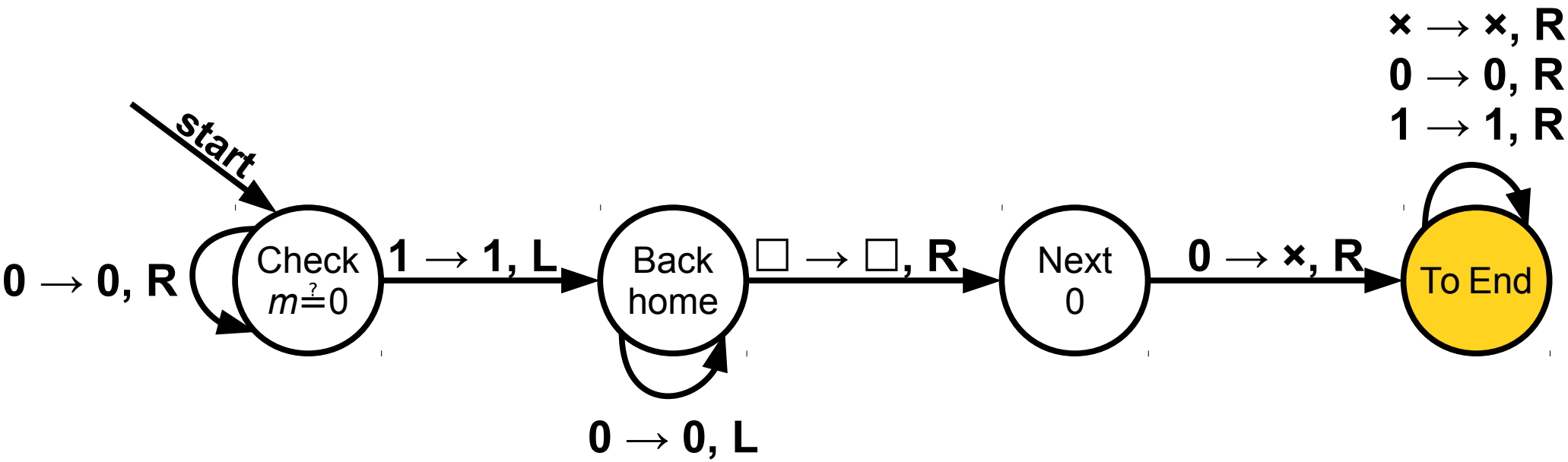
start
0 → 0, R
Check
m ≟ 0
1 → 1, L
Back
home
0 → 0, L
□ → □, R
Next
0
0 → ×, R
To End
× → ×, R
0 → 0, R
1 → 1, R

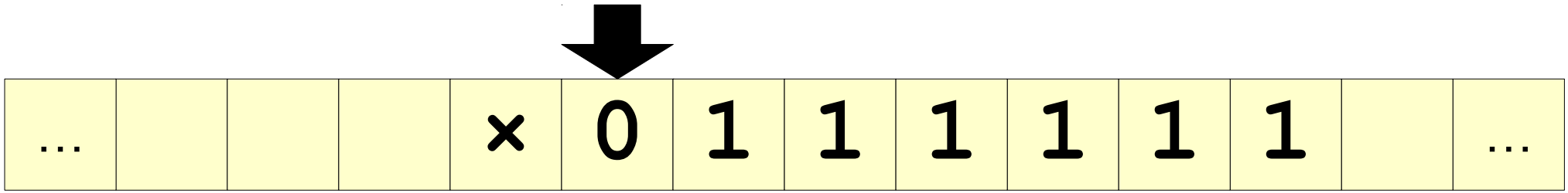
…
×
0
1
1
1
1
1
1
…

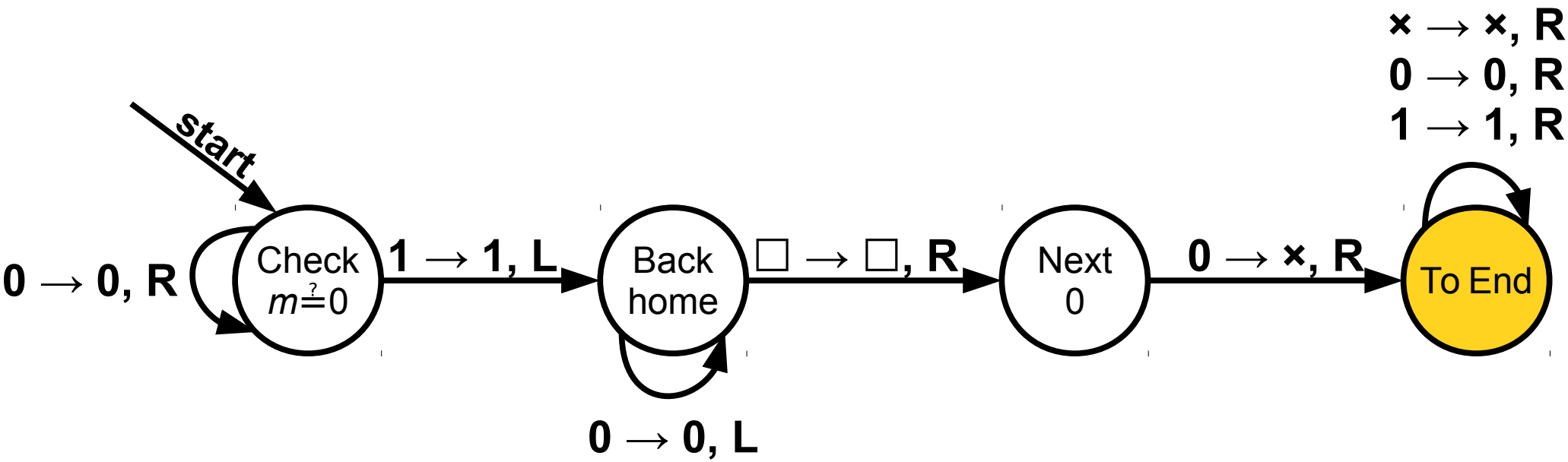
start
Check
$m \stackrel{?}{=} 0$
0 → 0, R
1 → 1, L
Back
home
0 → 0, L
□ → □, R
Next
0
0 → ×, R
To End
× → ×, R
0 → 0, R
1 → 1, R

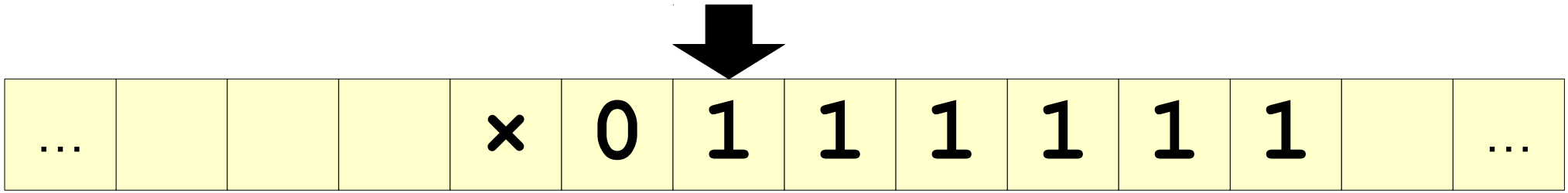
…
×
0
1
1
1
1
1
1
…

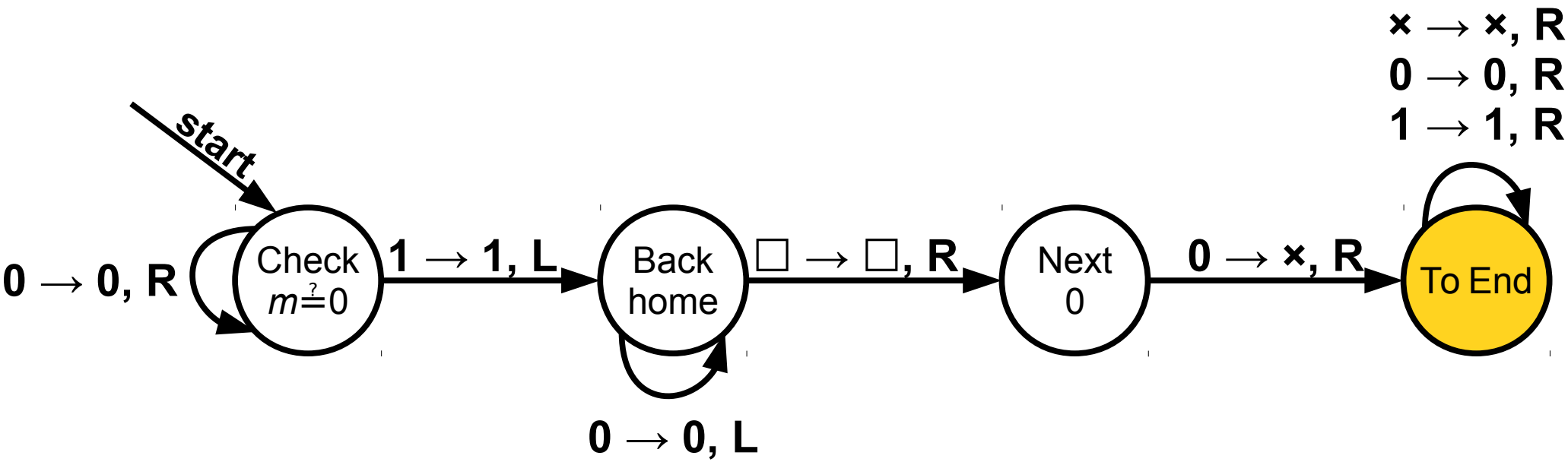
start
Check
$m \stackrel{?}{=} 0$
0 → 0, R
1 → 1, L
Back
home
0 → 0, L
□ → □, R
Next
0
0 → ×, R
To End
× → ×, R
0 → 0, R
1 → 1, R

…				×	0	1	1	1	1	1	1		…

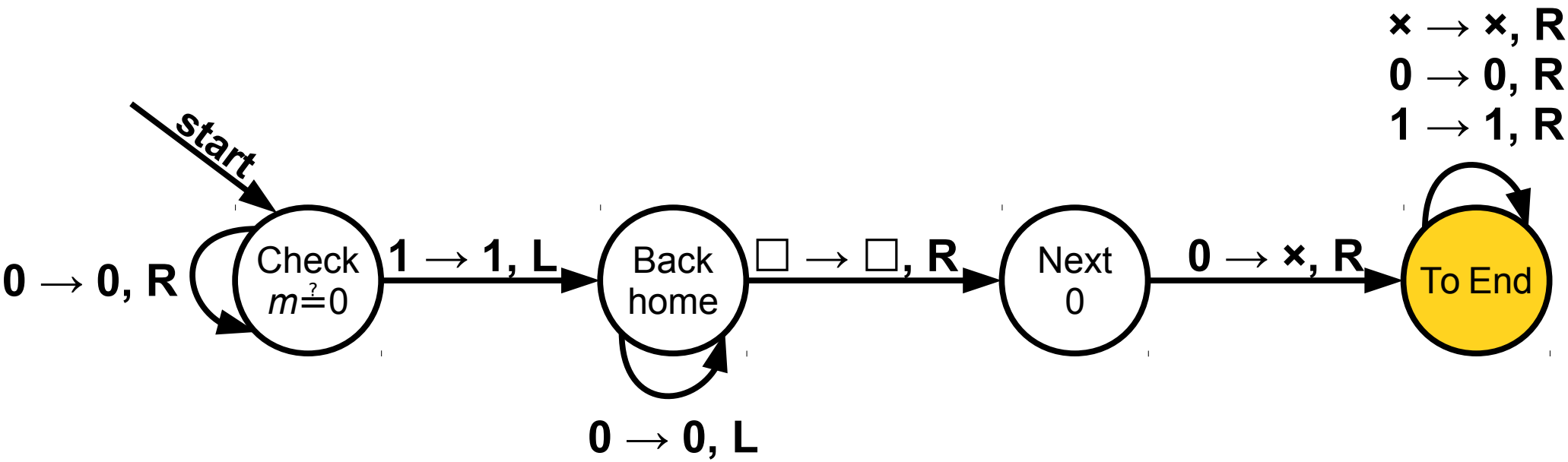
start
0 → 0, R
Check
m ≟ 0
1 → 1, L
Back
home
0 → 0, L
□ → □, R
Next
0
0 → ×, R
To End
× → ×, R
0 → 0, R
1 → 1, R

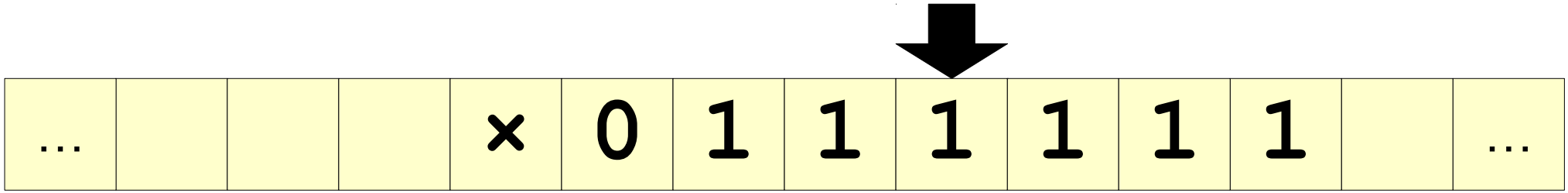
...
×
0
1
1
1
1
1
1
...

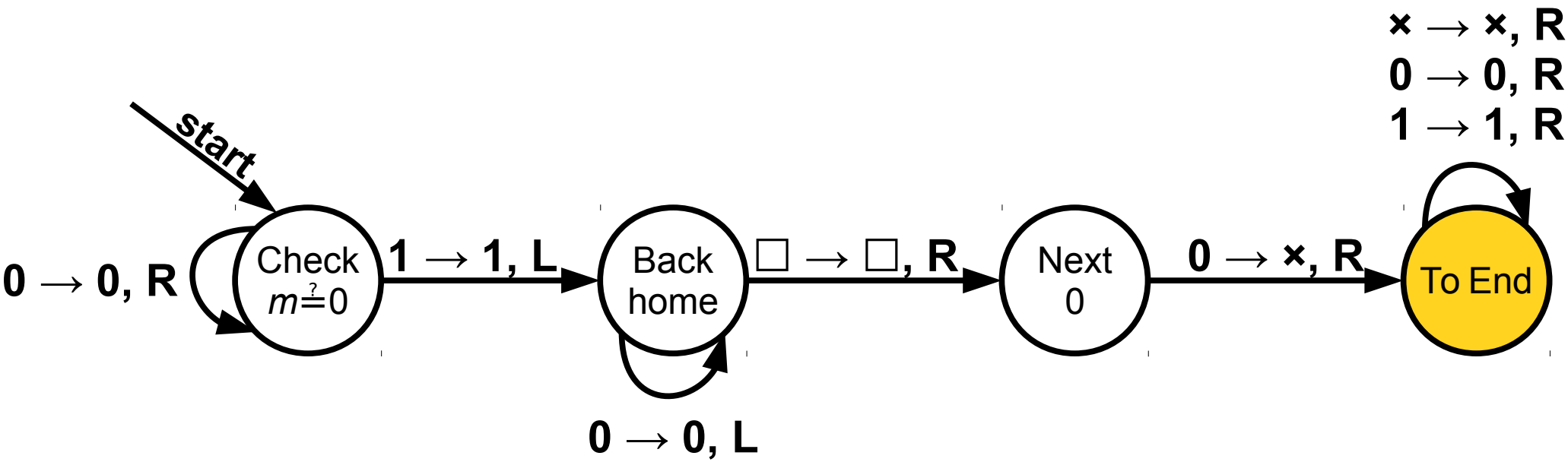
start
0 → 0, R
Check
m ≟ 0
1 → 1, L
Back
home
0 → 0, L
□ → □, R
Next
0
0 → ×, R
To End
× → ×, R
0 → 0, R
1 → 1, R

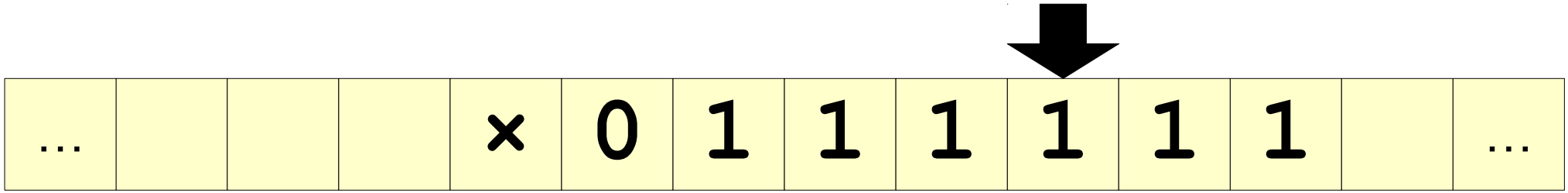
…
×
0
1
1
1
1
1
1
…

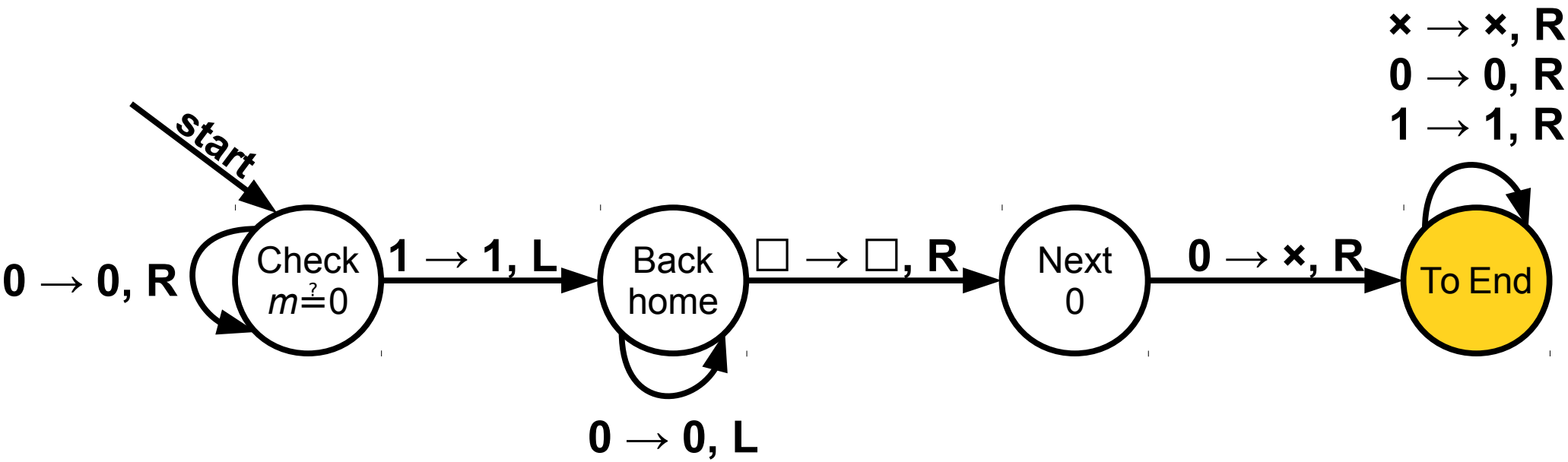
start
0 → 0, R
Check
m ≟ 0
1 → 1, L
Back
home
0 → 0, L
□ → □, R
Next
0
0 → ×, R
To End
× → ×, R
0 → 0, R
1 → 1, R

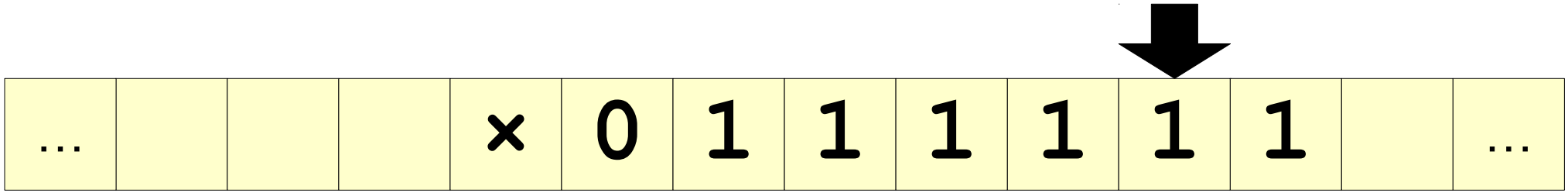
…
×
0
1
1
1
1
1
1
…

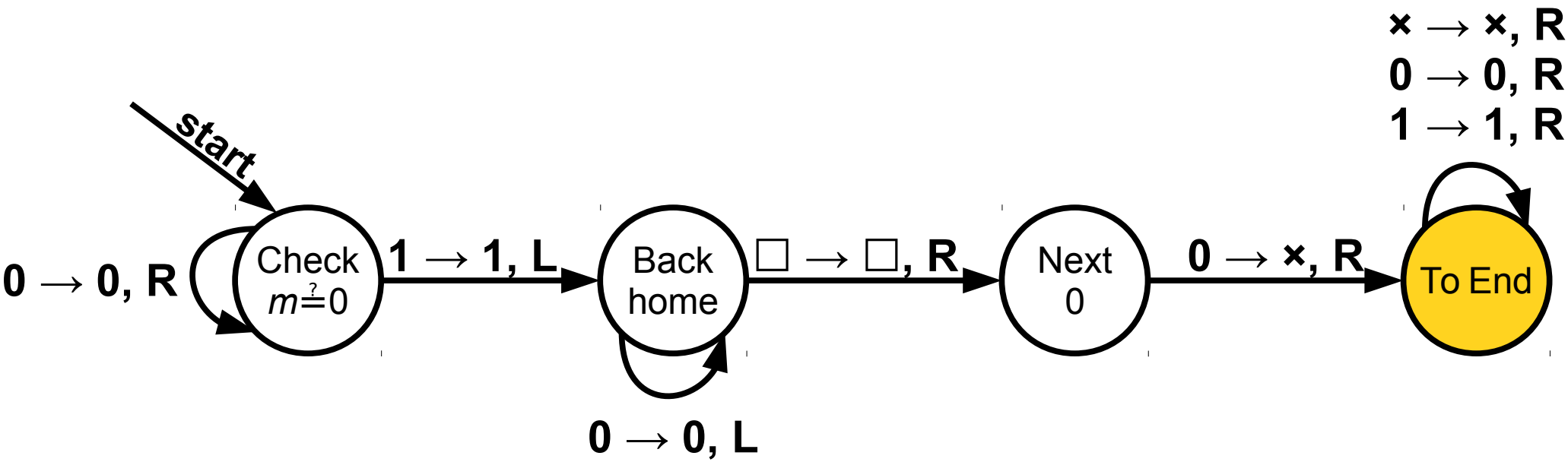
start
0 → 0, R
Check
m ?= 0
1 → 1, L
Back
home
0 → 0, L
□ → □, R
Next
0
0 → ×, R
To End
× → ×, R
0 → 0, R
1 → 1, R

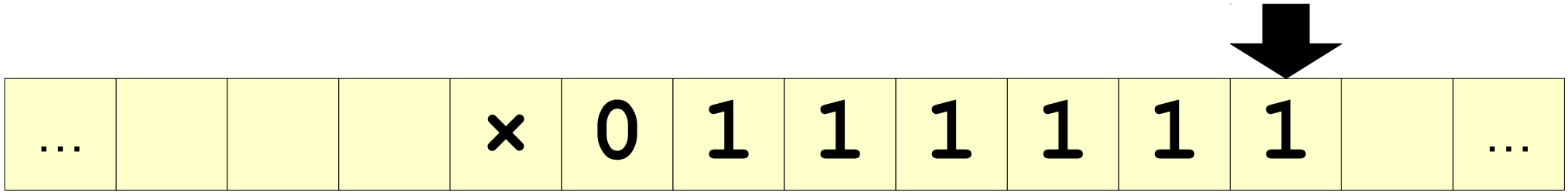
…
×
0
1
1
1
1
1
1
…

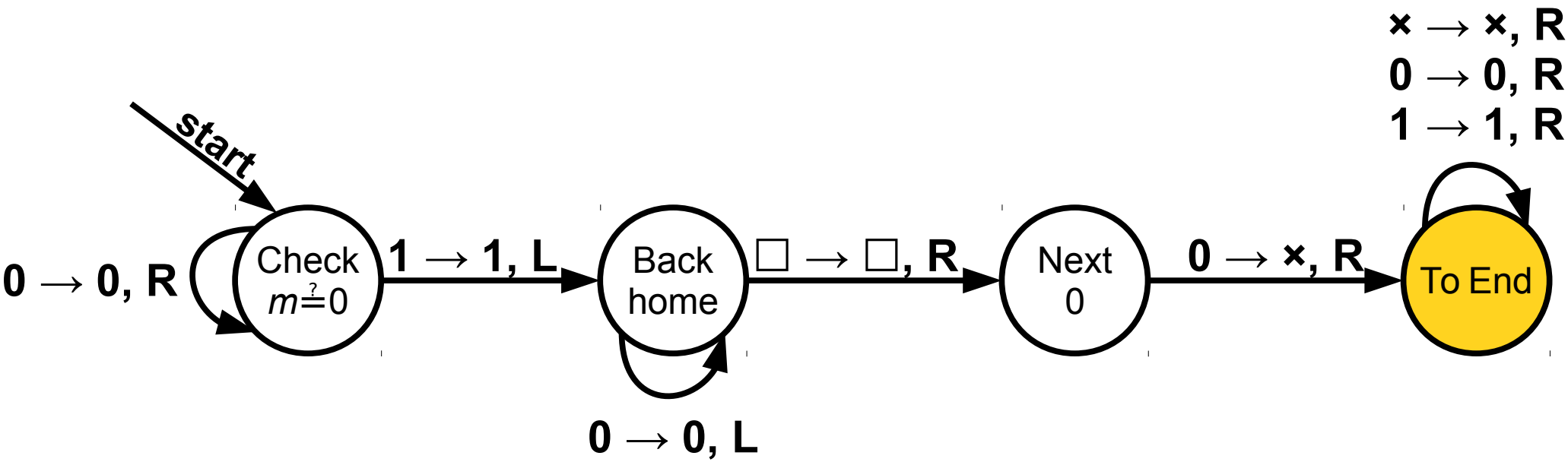
start
0 → 0, R
Check
m ≟ 0
1 → 1, L
Back
home
0 → 0, L
□ → □, R
Next
0
0 → ×, R
To End
× → ×, R
0 → 0, R
1 → 1, R

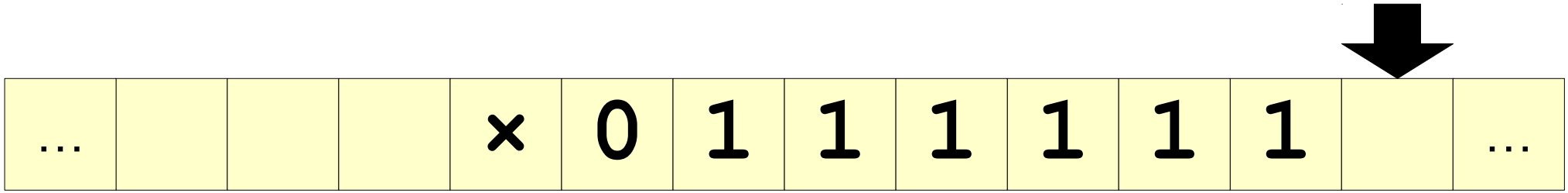
...
×
0
1
1
1
1
1
1
...

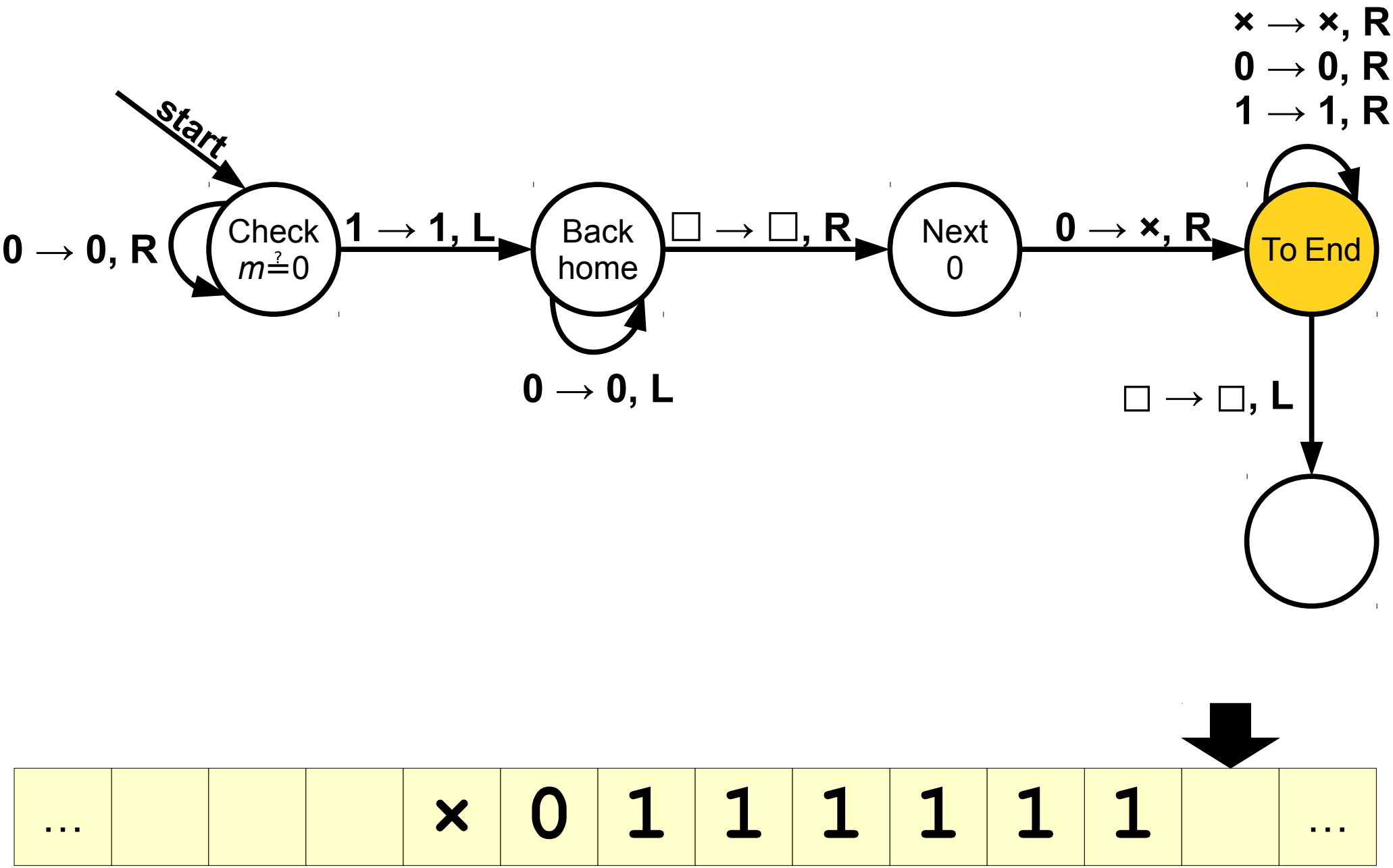
start
0 → 0, R
Check
m ?= 0
1 → 1, L
Back
home
0 → 0, L
□ → □, R
Next
0
0 → ×, R
To End
× → ×, R
0 → 0, R
1 → 1, R
□ → □, L
… × 0 1 1 1 1 1 1 …

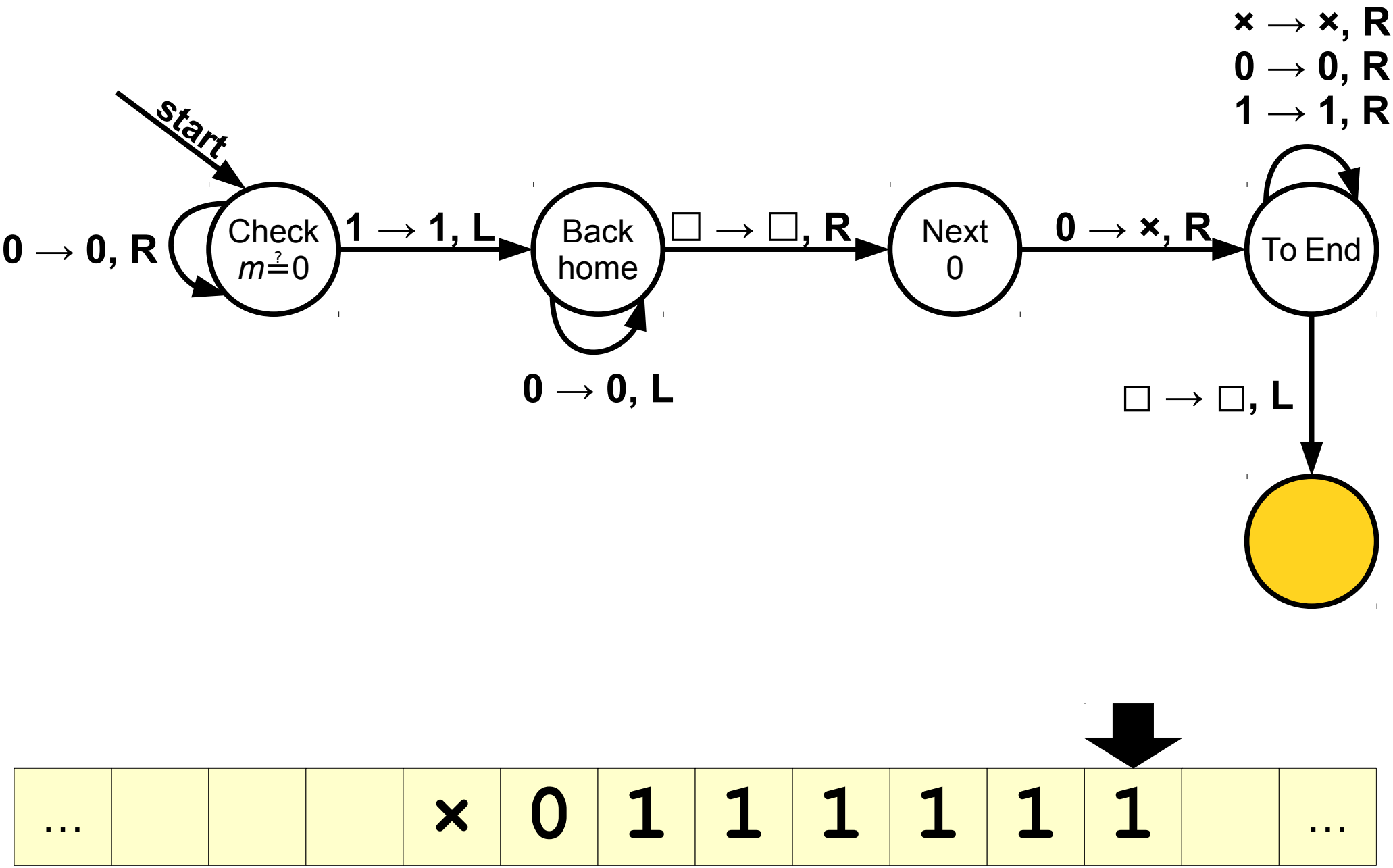
start
0 → 0, R
Check
m ?= 0
1 → 1, L
Back
home
0 → 0, L
□ → □, R
Next
0
0 → ×, R
To End
× → ×, R
0 → 0, R
1 → 1, R
□ → □, L
… × 0 1 1 1 1 1 1 …

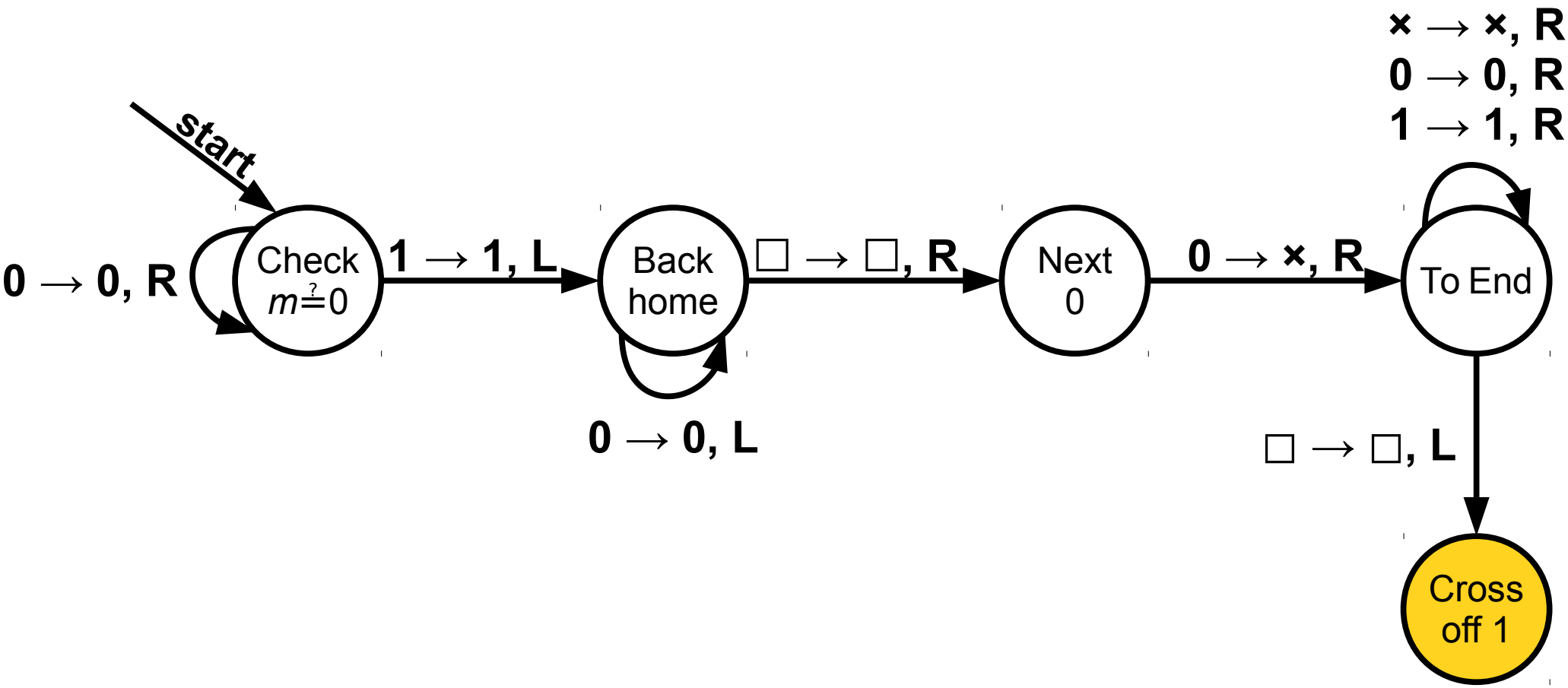
start
Check
$m \stackrel{?}{=} 0$
0 → 0, R
1 → 1, L
Back
home
0 → 0, L
□ → □, R
Next
0
0 → ×, R
To End
× → ×, R
0 → 0, R
1 → 1, R
□ → □, L
Cross
off 1

…				×	0	1	1	1	1	1	1		…

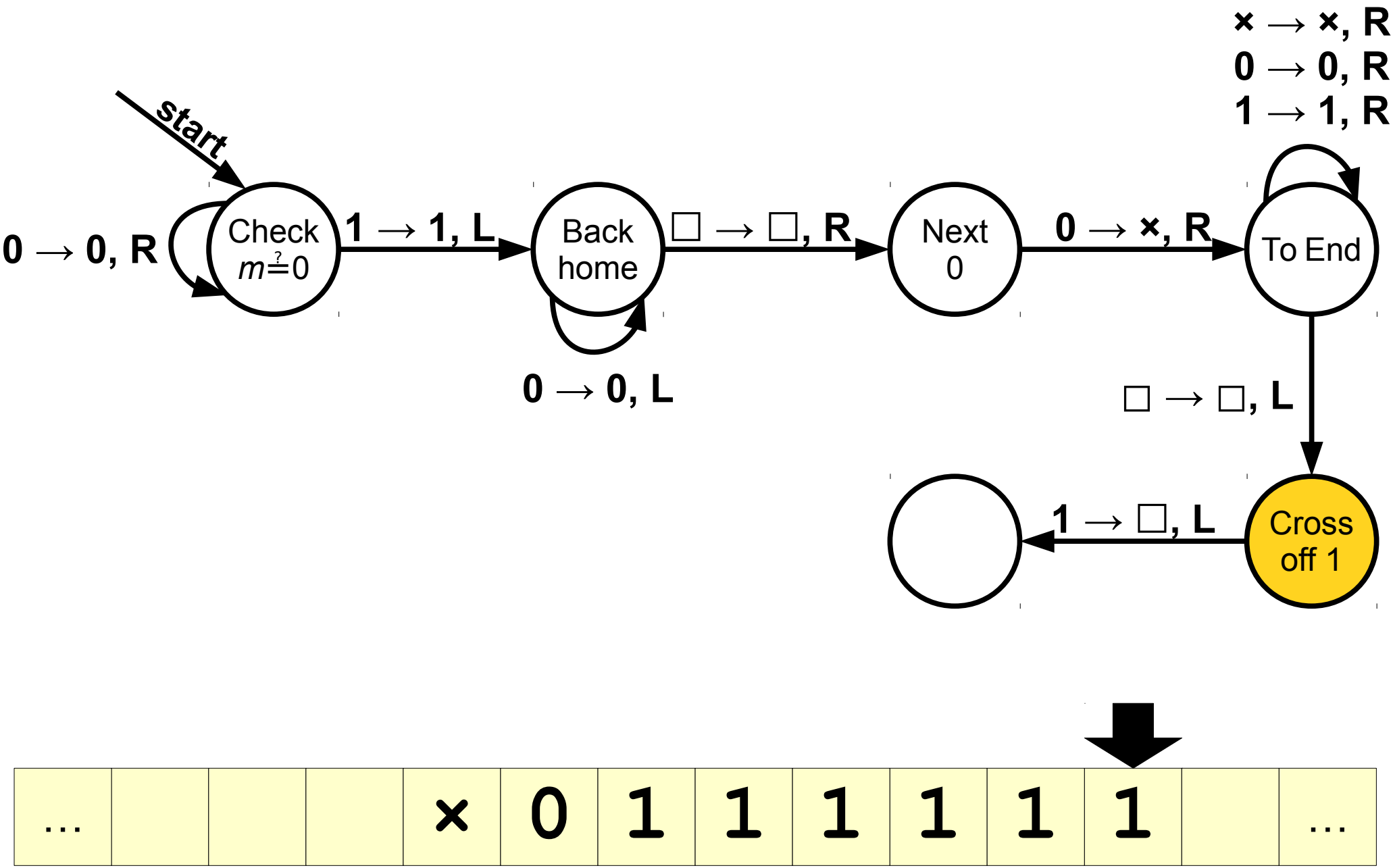
start
0 → 0, R
Check
m ?= 0
1 → 1, L
Back
home
0 → 0, L
□ → □, R
Next
0
0 → ×, R
× → ×, R
0 → 0, R
1 → 1, R
To End
□ → □, L
Cross
off 1
1 → □, L
…
×
0
1
1
1
1
1
1
…

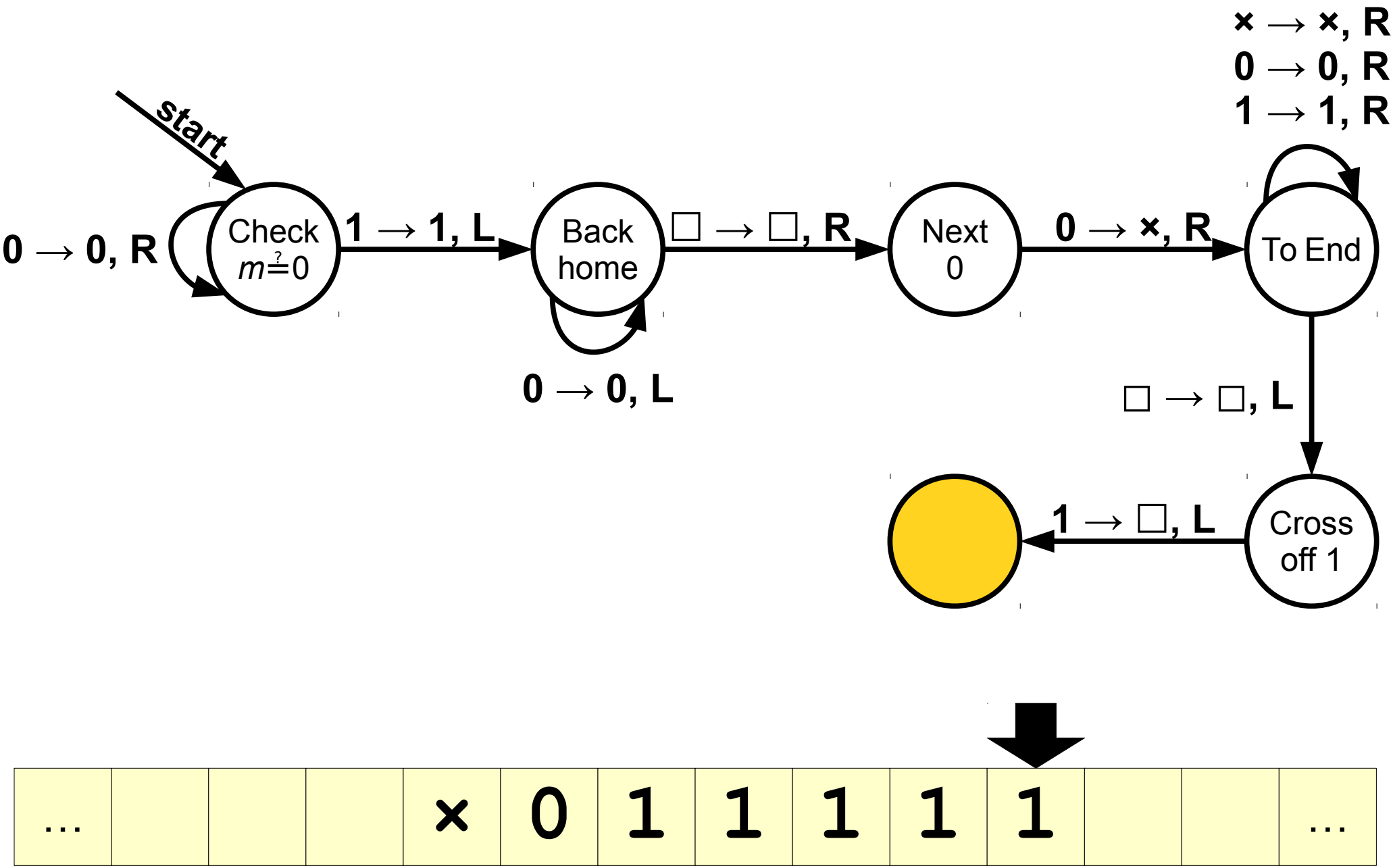
start
Check
$m \stackrel{?}{=} 0$
0 → 0, R
1 → 1, L
Back
home
0 → 0, L
□ → □, R
Next
0
0 → ×, R
To End
× → ×, R
0 → 0, R
1 → 1, R
□ → □, L
Cross
off 1
1 → □, L
…
×
0
1
1
1
1
1
…

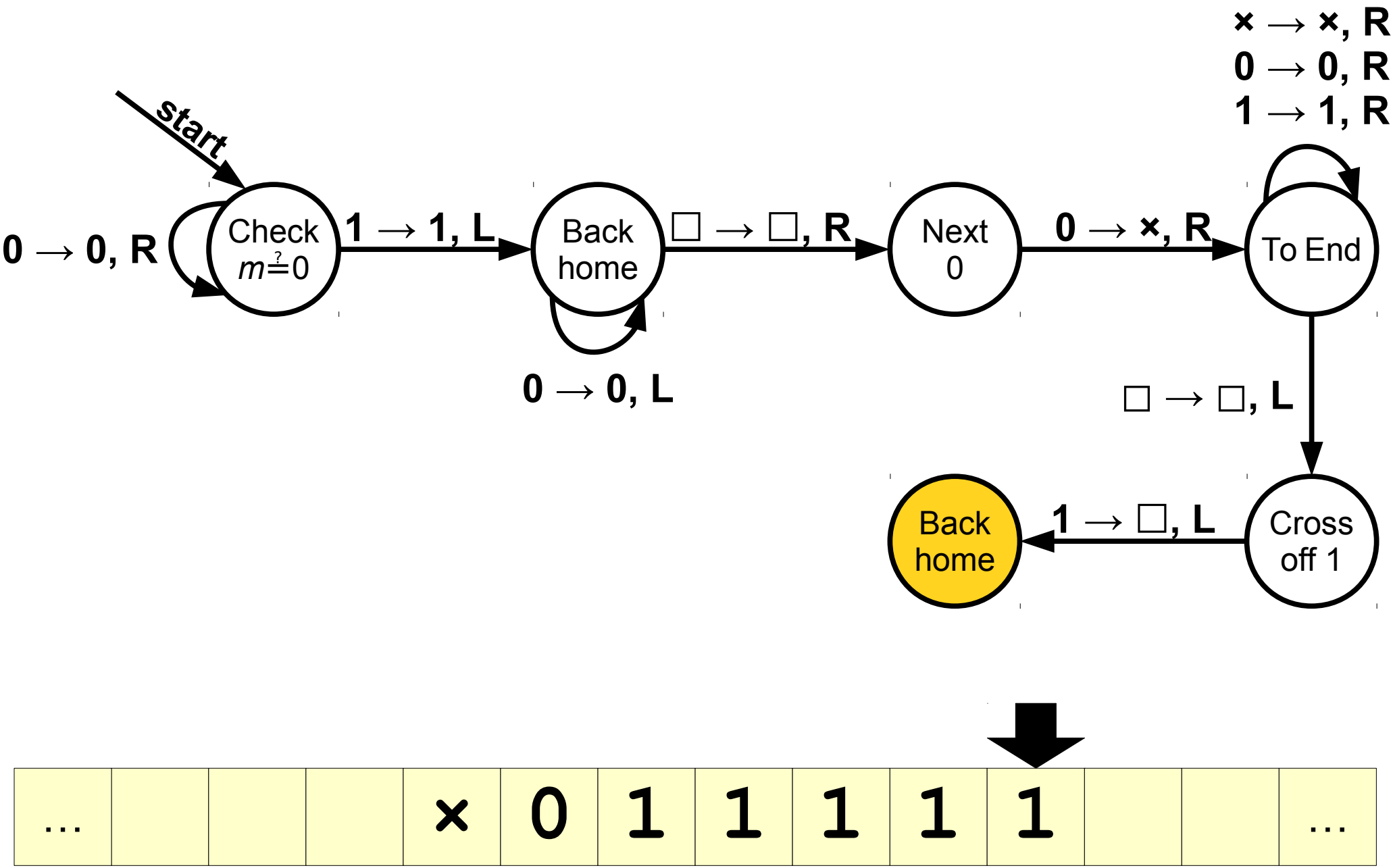
start
Check
$m \stackrel{?}{=} 0$
0 → 0, R
1 → 1, L
Back
home
0 → 0, L
□ → □, R
Next
0
0 → ×, R
To End
× → ×, R
0 → 0, R
1 → 1, R
□ → □, L
Cross
off 1
1 → □, L
Back
home
…
×
0
1
1
1
1
1
…

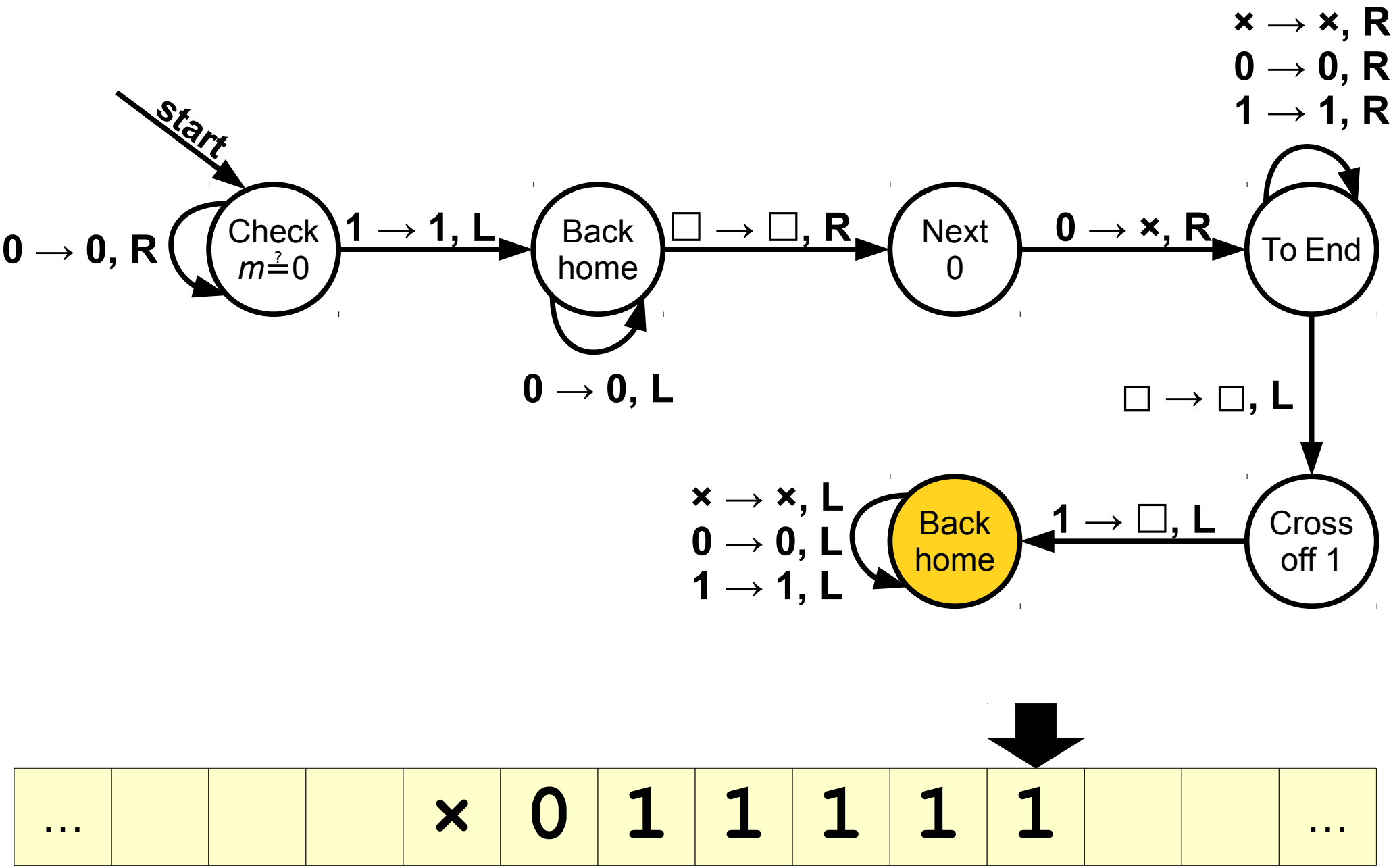
start
Check
m ≟ 0
0 → 0, R
1 → 1, L
Back
home
0 → 0, L
□ → □, R
Next
0
0 → ×, R
To End
× → ×, R
0 → 0, R
1 → 1, R
□ → □, L
Cross
off 1
1 → □, L
Back
home
× → ×, L
0 → 0, L
1 → 1, L
… × 0 1 1 1 1 1 …

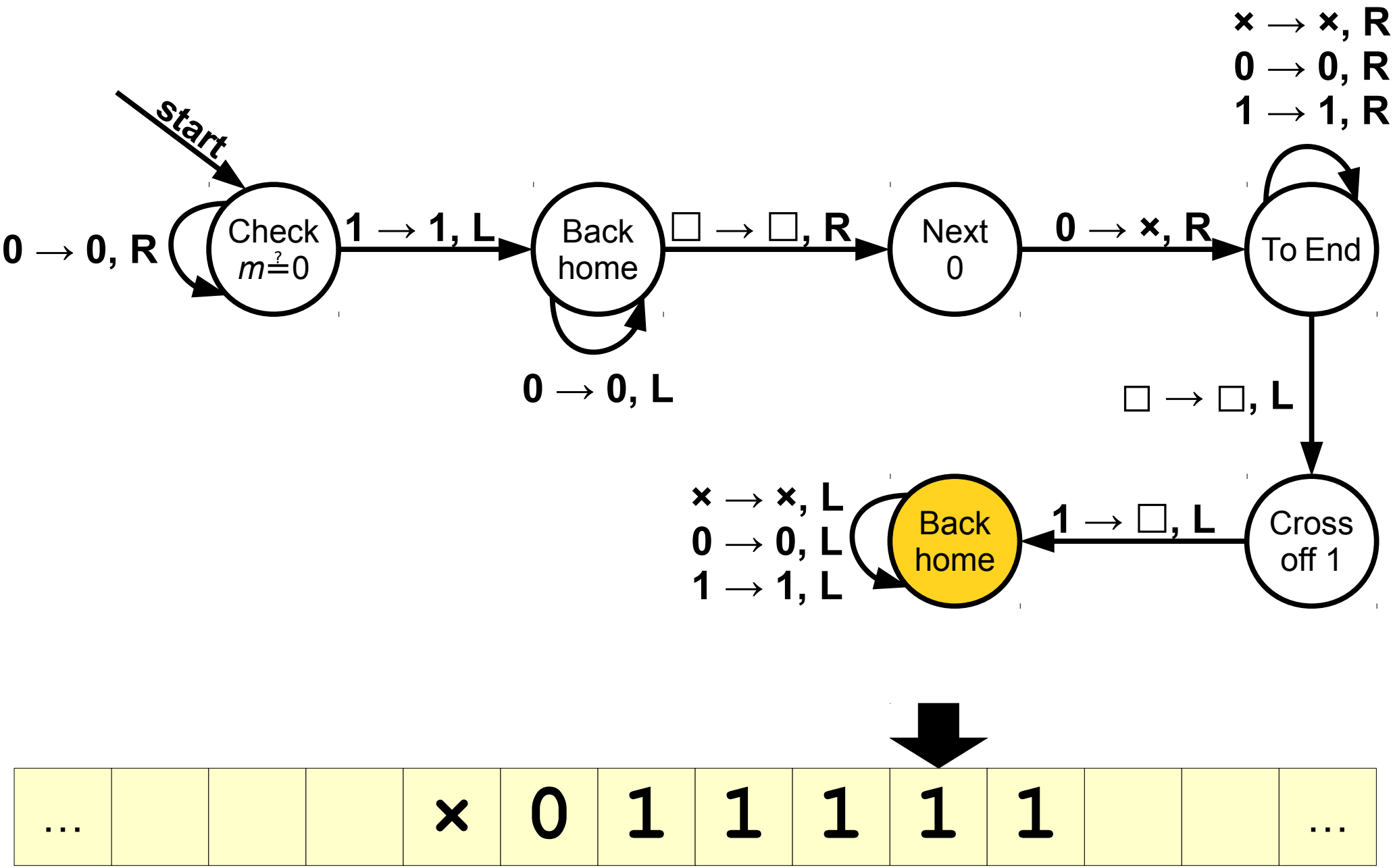
start
Check
m ?= 0
0 → 0, R
1 → 1, L
Back
home
0 → 0, L
□ → □, R
Next
0
0 → ×, R
To End
× → ×, R
0 → 0, R
1 → 1, R
□ → □, L
Cross
off 1
1 → □, L
Back
home
× → ×, L
0 → 0, L
1 → 1, L
… × 0 1 1 1 1 1 …

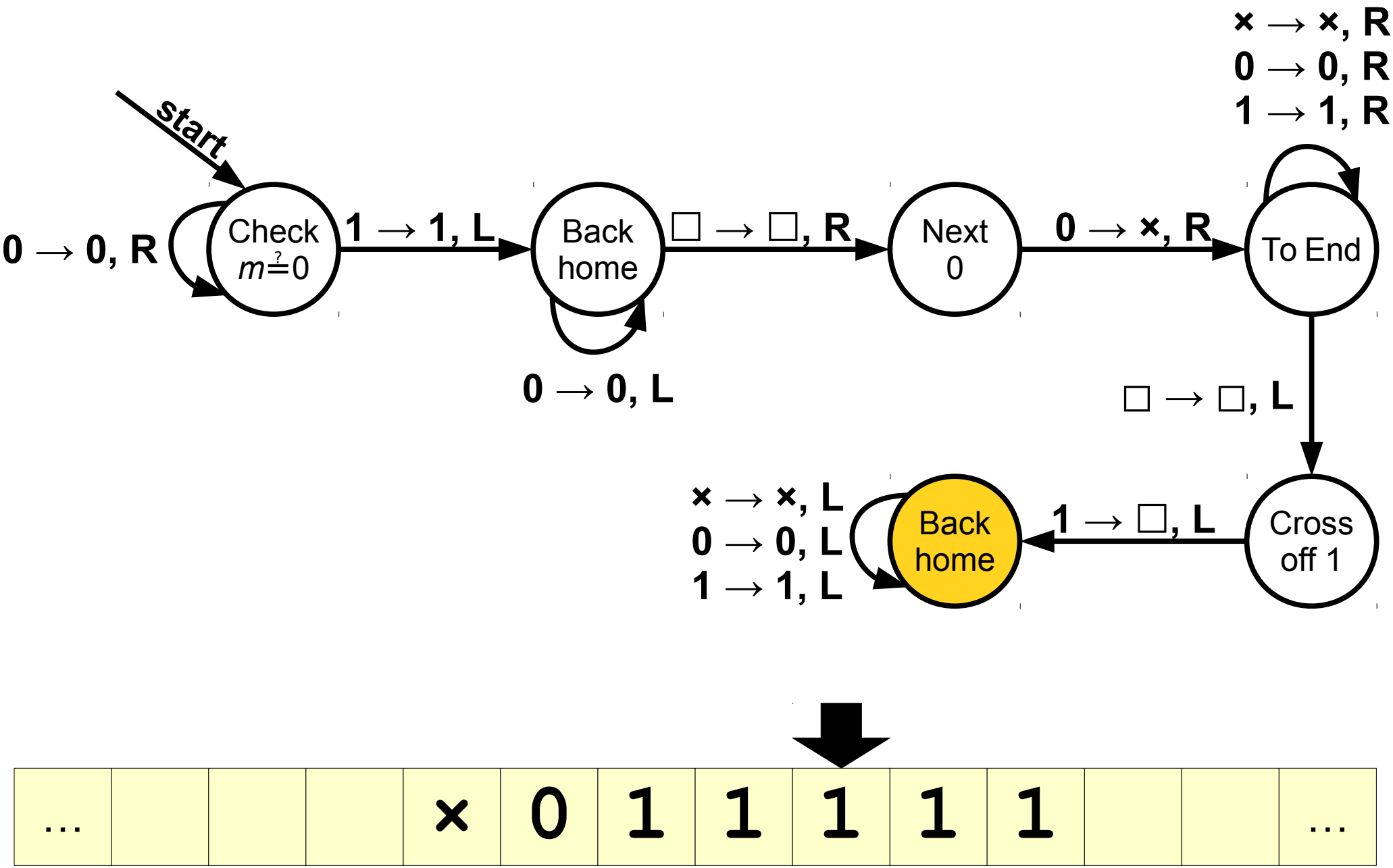
start
Check
m ?= 0
0 → 0, R
1 → 1, L
Back
home
0 → 0, L
□ → □, R
Next
0
0 → ×, R
To End
× → ×, R
0 → 0, R
1 → 1, R
□ → □, L
Cross
off 1
1 → □, L
Back
home
× → ×, L
0 → 0, L
1 → 1, L
… × 0 1 1 1 1 1 …

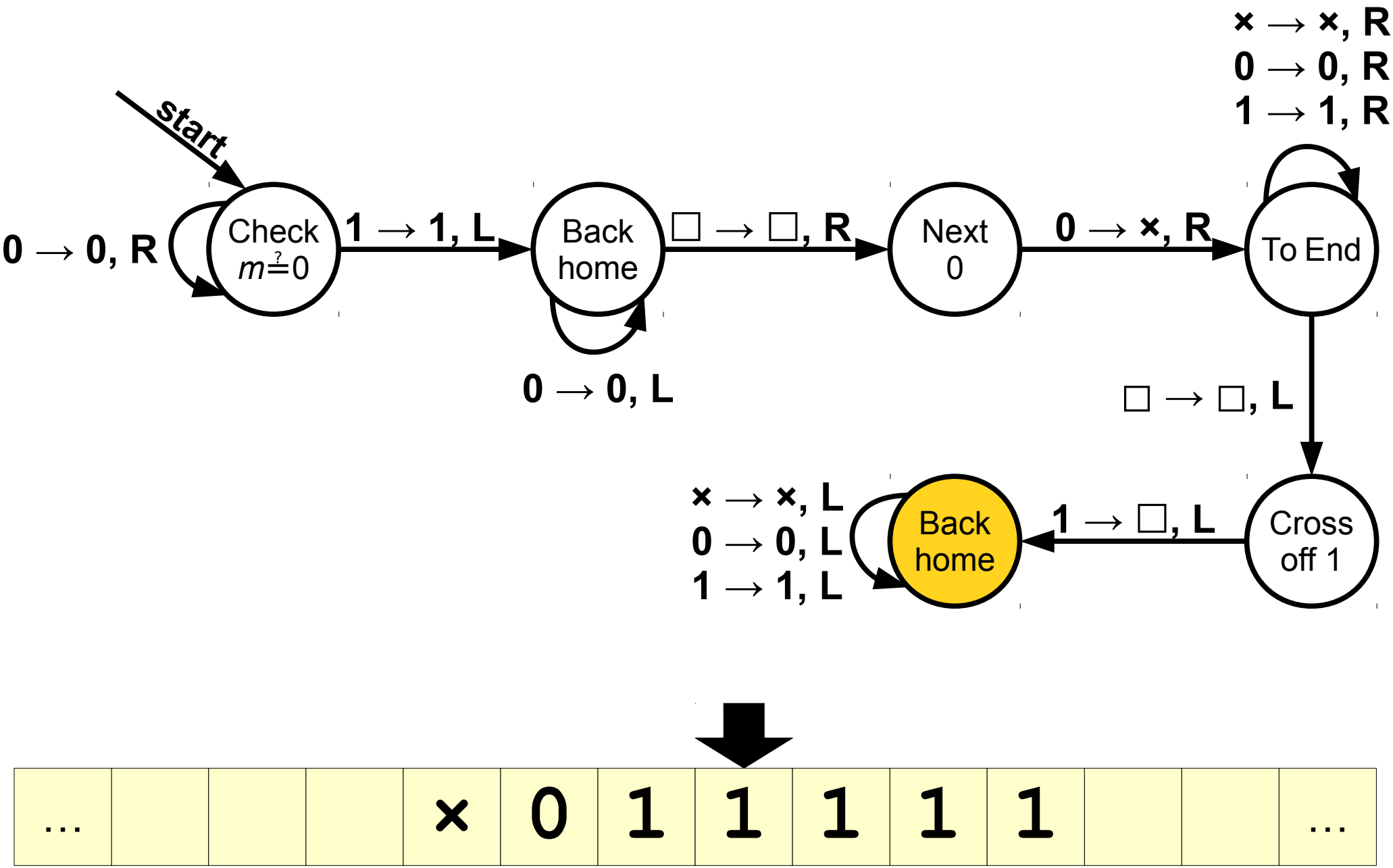
start
Check
m ?= 0
0 → 0, R
1 → 1, L
Back
home
0 → 0, L
□ → □, R
Next
0
0 → ×, R
To End
× → ×, R
0 → 0, R
1 → 1, R
□ → □, L
Cross
off 1
1 → □, L
Back
home
× → ×, L
0 → 0, L
1 → 1, L
… × 0 1 1 1 1 1 …

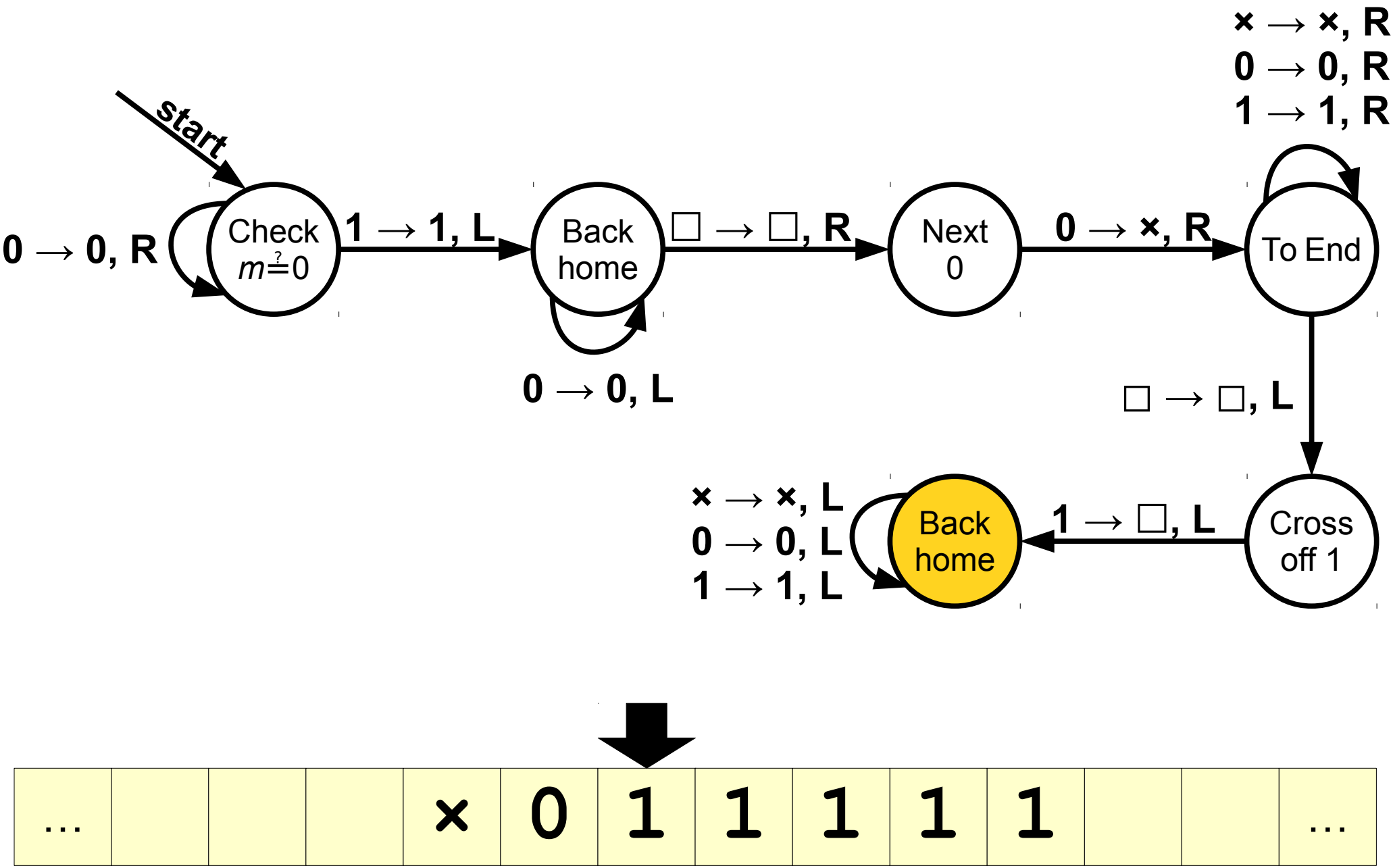
start
Check
m ≟ 0
0 → 0, R
1 → 1, L
Back
home
0 → 0, L
□ → □, R
Next
0
0 → ×, R
To End
× → ×, R
0 → 0, R
1 → 1, R
□ → □, L
Cross
off 1
1 → □, L
Back
home
× → ×, L
0 → 0, L
1 → 1, L
… × 0 1 1 1 1 1 …

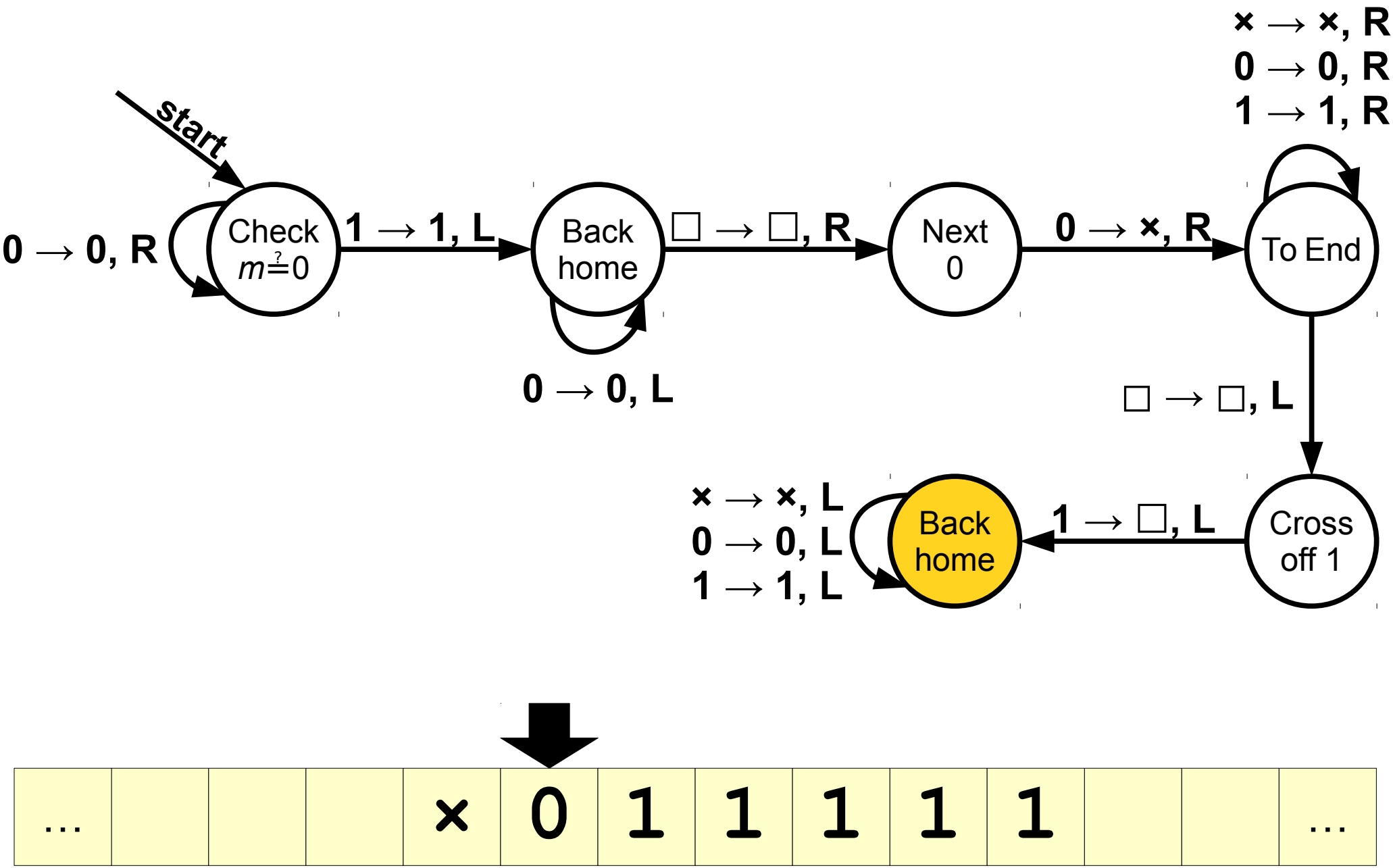
start
Check
m=?0
0 → 0, R
1 → 1, L
Back
home
0 → 0, L
□ → □, R
Next
0
0 → ×, R
To End
× → ×, R
0 → 0, R
1 → 1, R
□ → □, L
Cross
off 1
1 → □, L
Back
home
× → ×, L
0 → 0, L
1 → 1, L
...
×
0
1
1
1
1
1
...

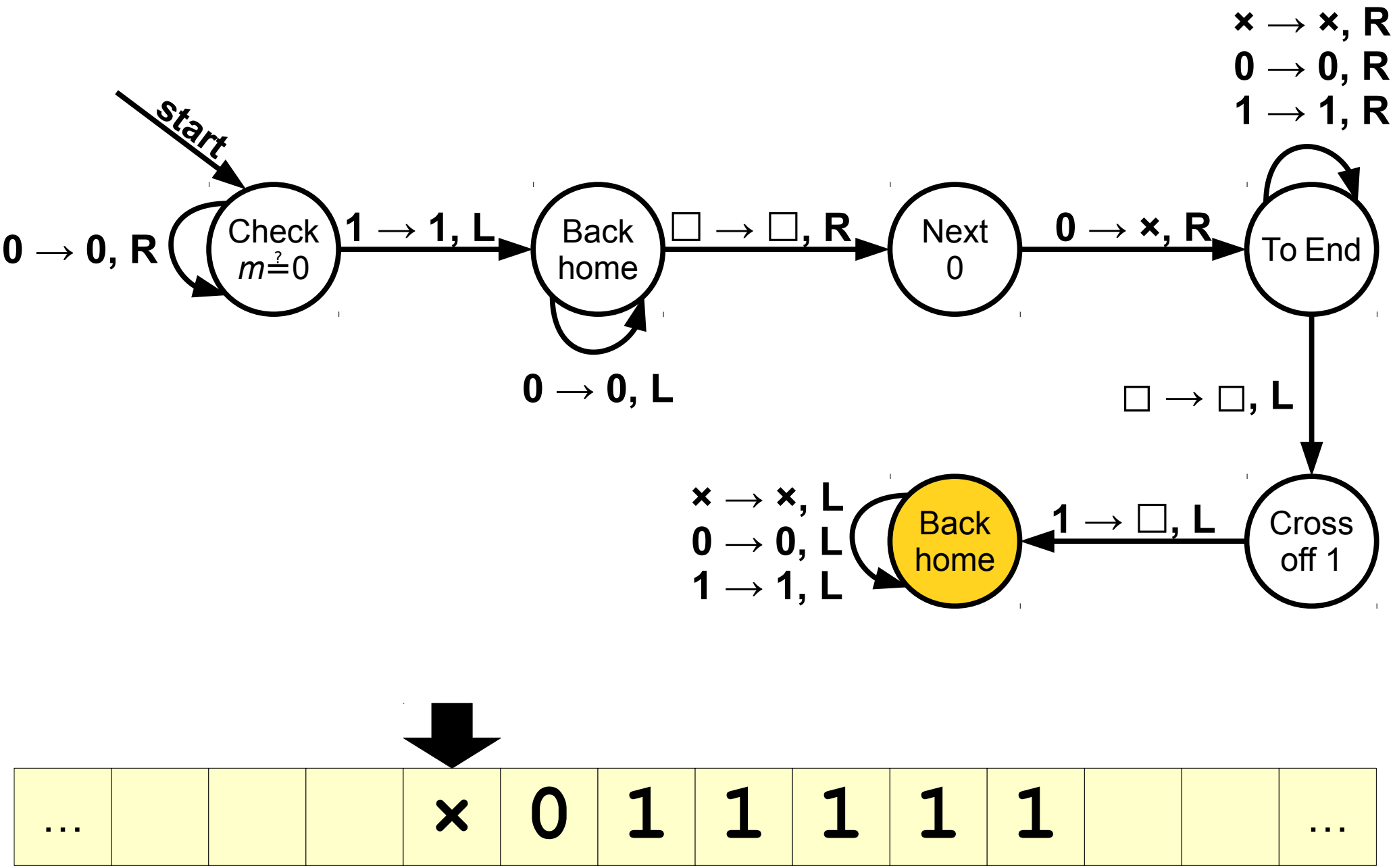
start
Check
m=?0
0 → 0, R
1 → 1, L
Back
home
0 → 0, L
□ → □, R
Next
0
0 → ×, R
To End
× → ×, R
0 → 0, R
1 → 1, R
□ → □, L
Cross
off 1
1 → □, L
Back
home
× → ×, L
0 → 0, L
1 → 1, L
...
×
0
1
1
1
1
1
...

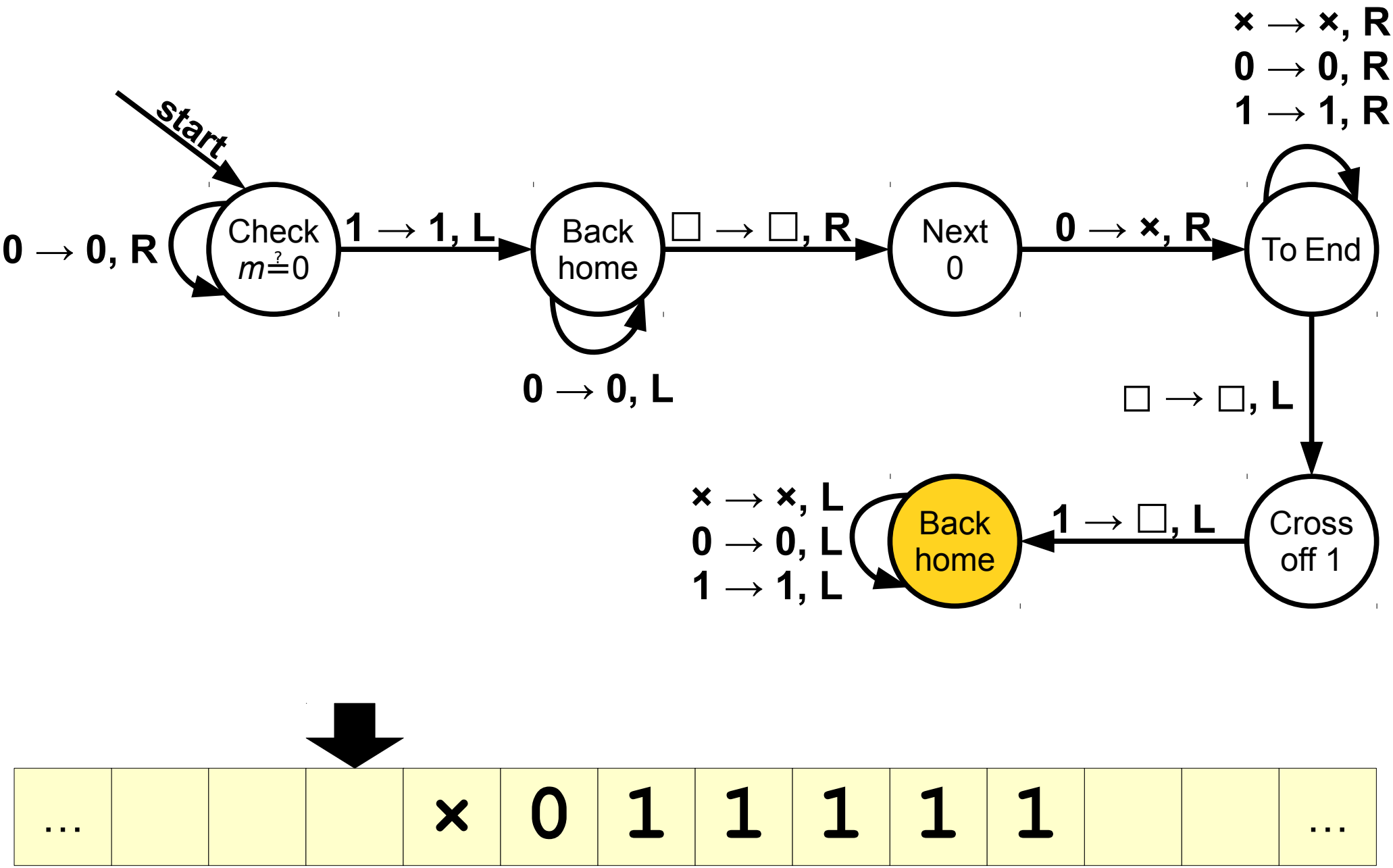
start
Check
m ?= 0
0 → 0, R
1 → 1, L
Back
home
0 → 0, L
□ → □, R
Next
0
0 → ×, R
To End
× → ×, R
0 → 0, R
1 → 1, R
□ → □, L
Cross
off 1
1 → □, L
Back
home
× → ×, L
0 → 0, L
1 → 1, L
…
×
0
1
1
1
1
1
…

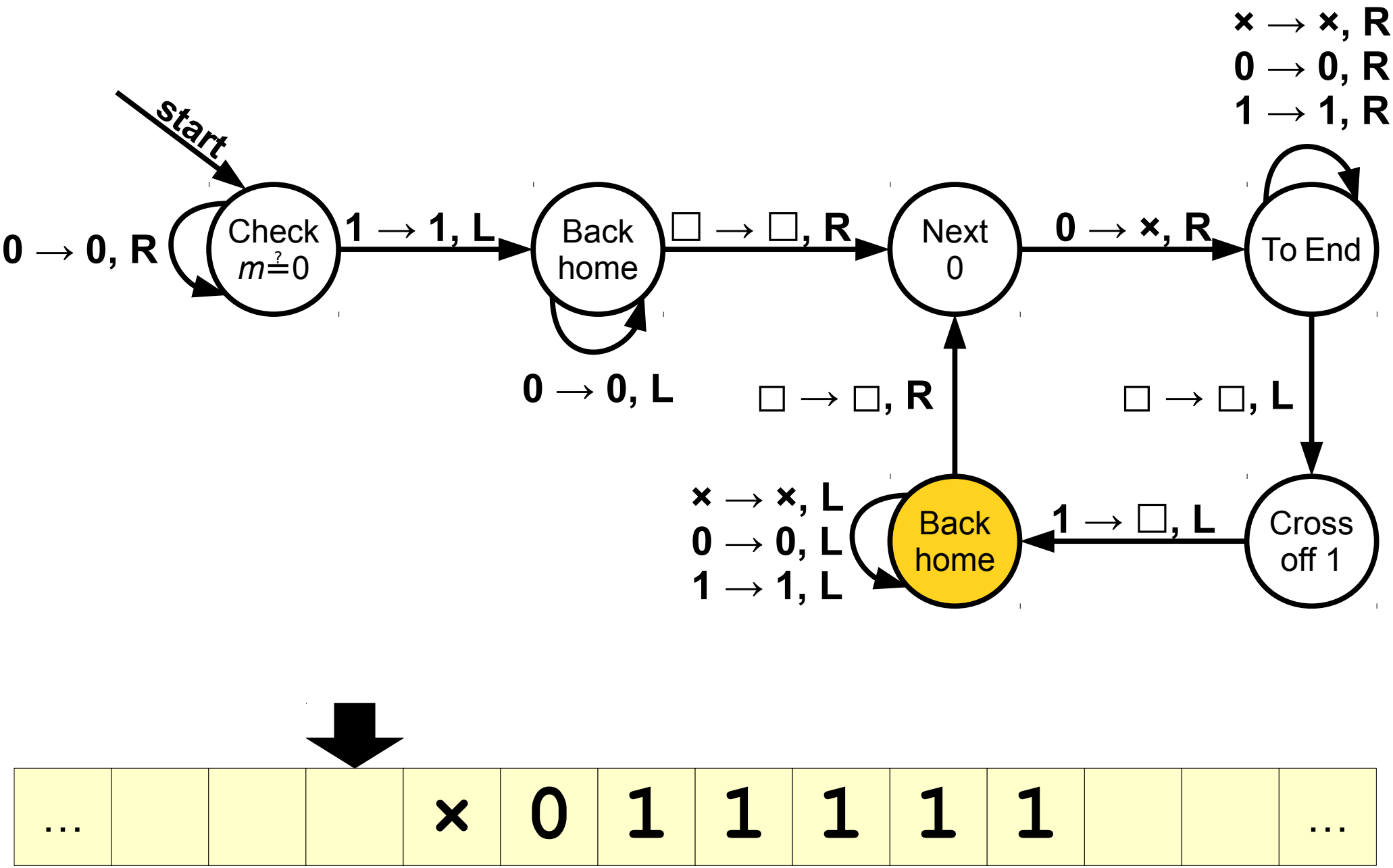
start
Check
m ?= 0
0 → 0, R
1 → 1, L
Back
home
0 → 0, L
□ → □, R
Next
0
0 → ×, R
To End
× → ×, R
0 → 0, R
1 → 1, R
□ → □, L
Cross
off 1
1 → □, L
Back
home
□ → □, R
× → ×, L
0 → 0, L
1 → 1, L
…
×
0
1
1
1
1
1
…

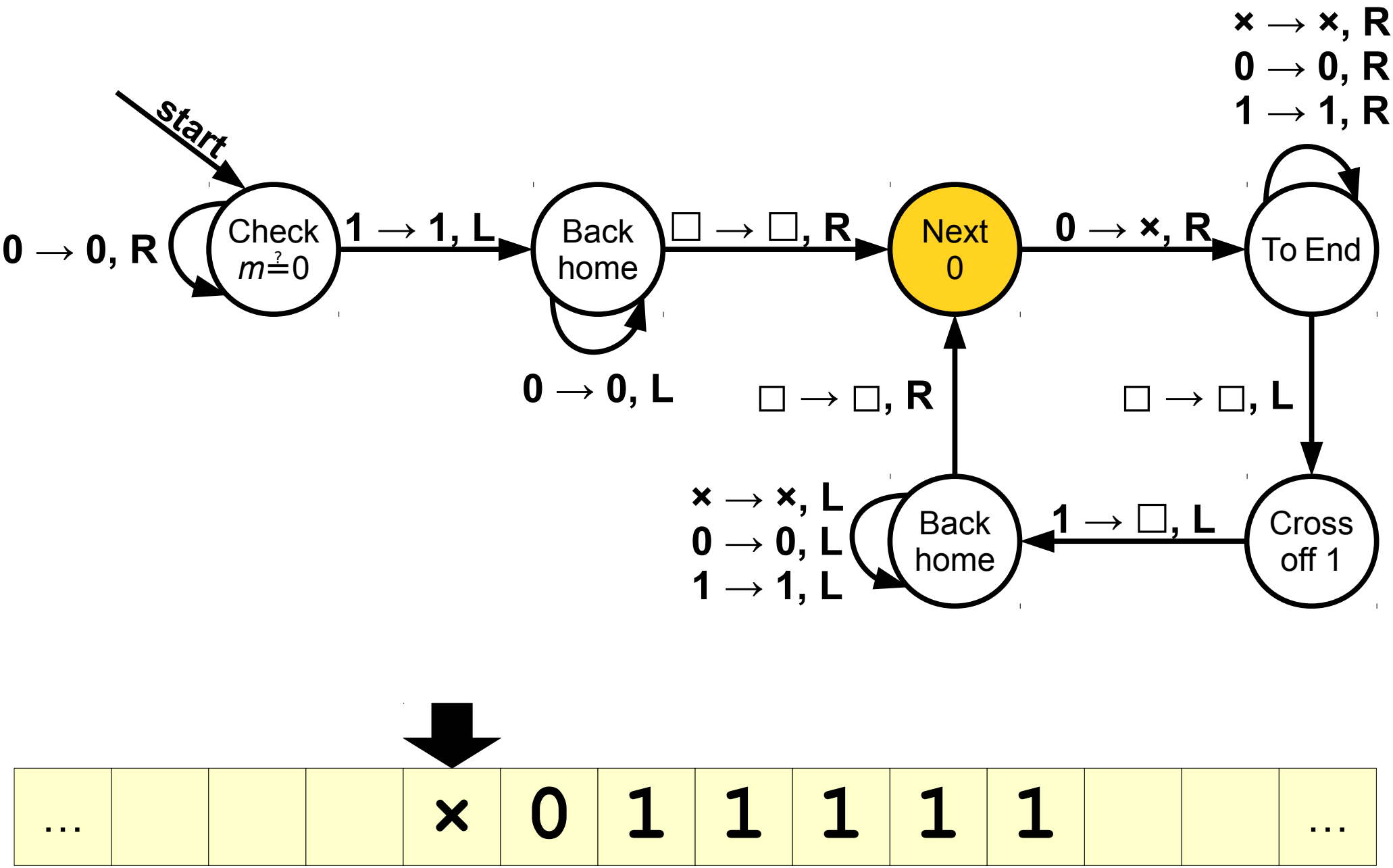
start
Check
m=?0
0 → 0, R
1 → 1, L
Back
home
0 → 0, L
□ → □, R
Next
0
0 → ×, R
To End
× → ×, R
0 → 0, R
1 → 1, R
□ → □, L
Cross
off 1
1 → □, L
Back
home
× → ×, L
0 → 0, L
1 → 1, L
□ → □, R
... × 0 1 1 1 1 1 ...

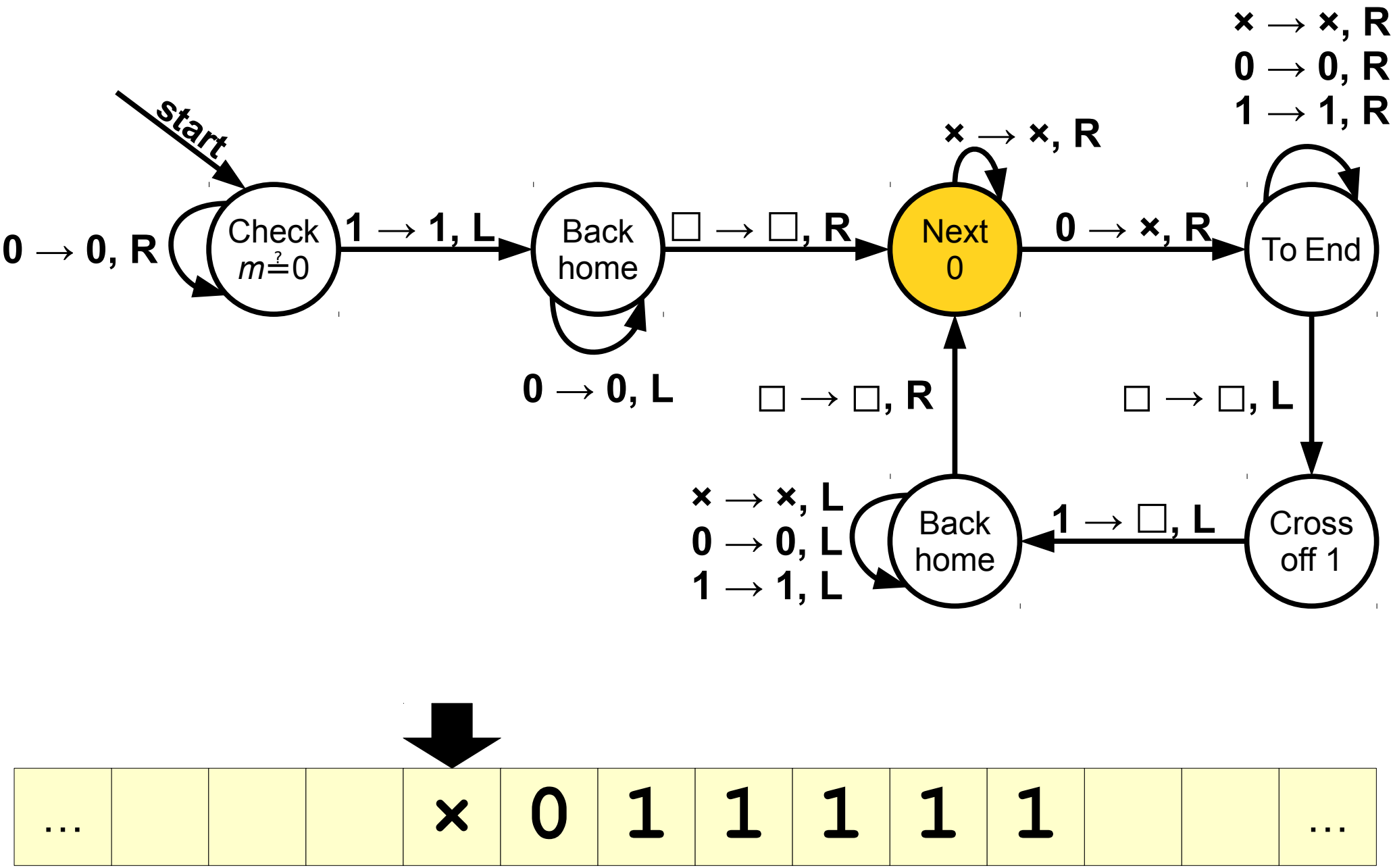
start
Check
m=?0
0 → 0, R
1 → 1, L
Back
home
0 → 0, L
□ → □, R
Next
0
× → ×, R
0 → ×, R
To End
× → ×, R
0 → 0, R
1 → 1, R
□ → □, L
Cross
off 1
1 → □, L
Back
home
× → ×, L
0 → 0, L
1 → 1, L
□ → □, R
… × 0 1 1 1 1 1 …

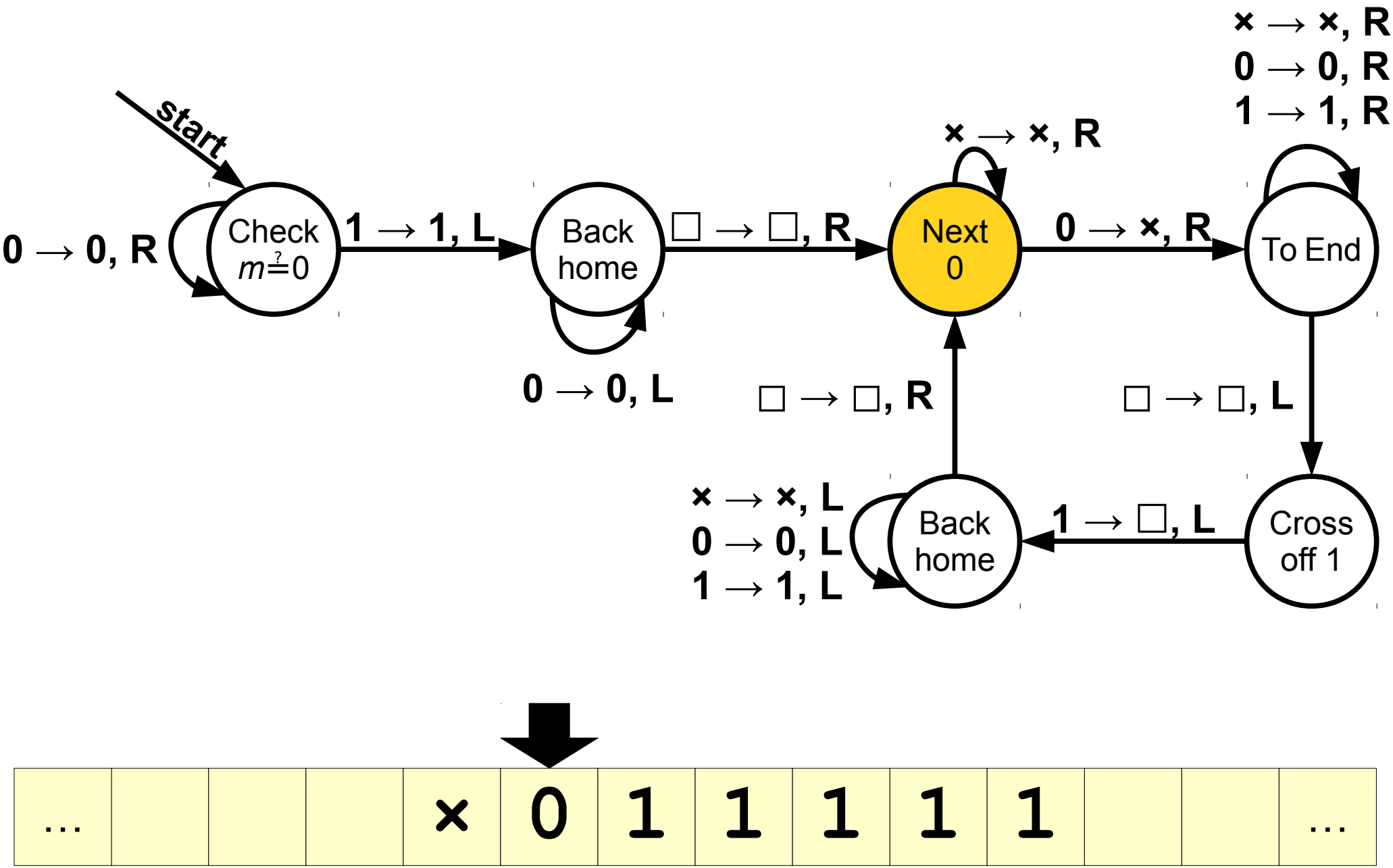
start
Check
m ?= 0
0 → 0, R
1 → 1, L
Back
home
0 → 0, L
□ → □, R
Next
0
× → ×, R
0 → ×, R
To End
× → ×, R
0 → 0, R
1 → 1, R
□ → □, L
Cross
off 1
1 → □, L
Back
home
× → ×, L
0 → 0, L
1 → 1, L
□ → □, R
…
×
0
1
1
1
1
1
…

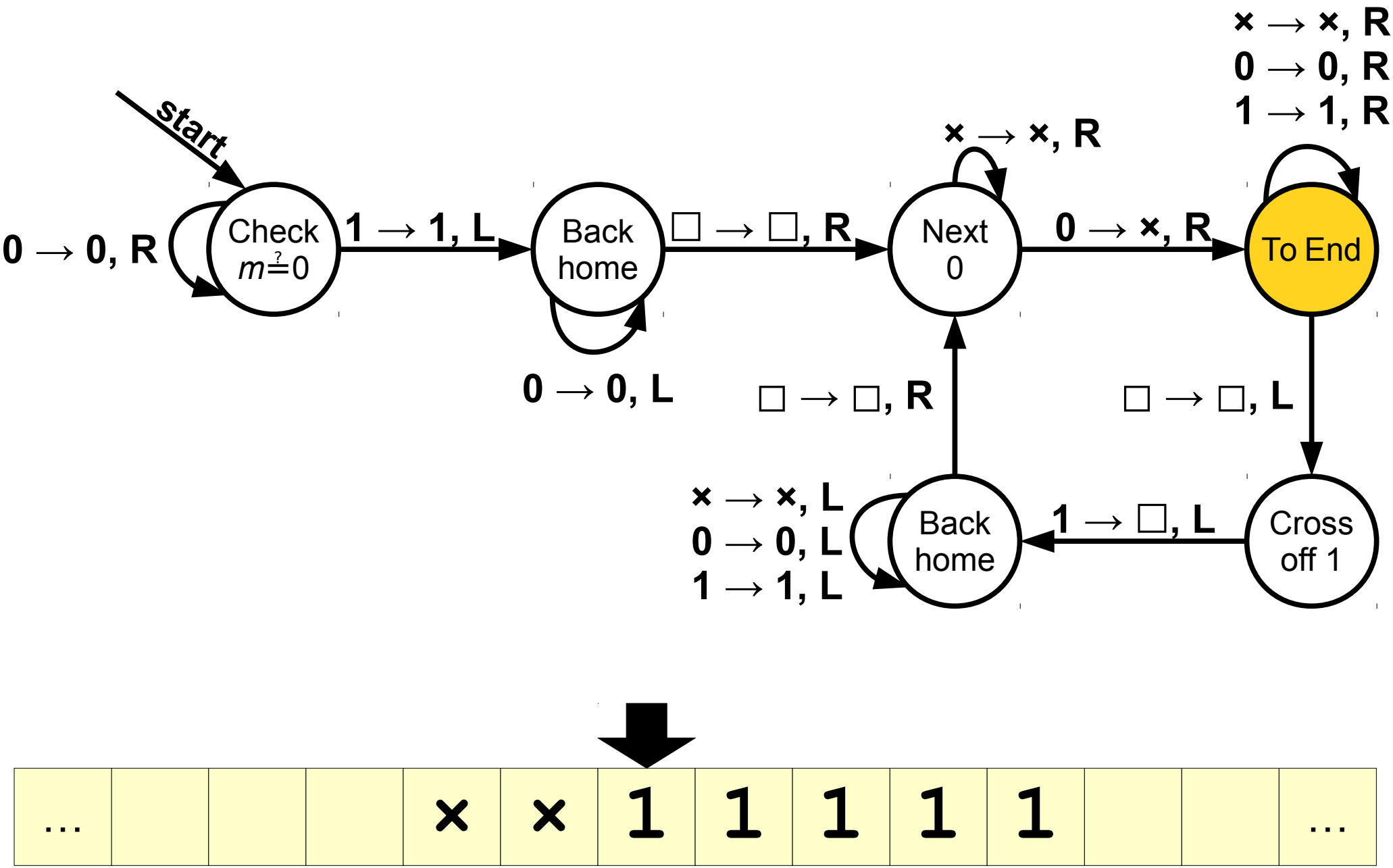
start
Check
m ?= 0
0 → 0, R
1 → 1, L
Back
home
0 → 0, L
□ → □, R
Next
0
× → ×, R
0 → ×, R
To End
× → ×, R
0 → 0, R
1 → 1, R
□ → □, L
Cross
off 1
1 → □, L
Back
home
× → ×, L
0 → 0, L
1 → 1, L
□ → □, R
… × × 1 1 1 1 1 …

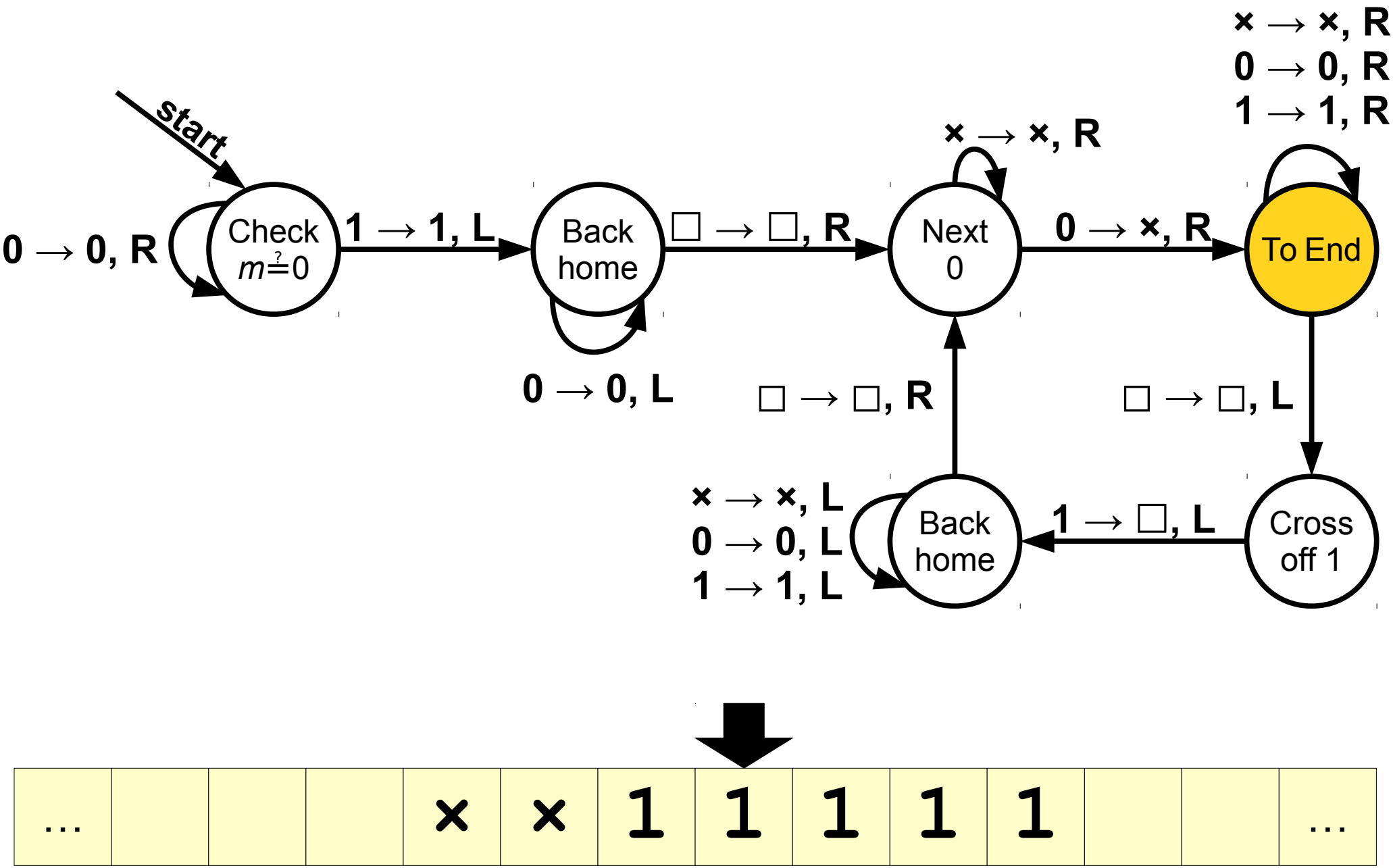
start
Check
m ?= 0
0 → 0, R
1 → 1, L
Back
home
0 → 0, L
□ → □, R
Next
0
× → ×, R
0 → ×, R
To End
× → ×, R
0 → 0, R
1 → 1, R
□ → □, L
Cross
off 1
1 → □, L
Back
home
× → ×, L
0 → 0, L
1 → 1, L
□ → □, R
… × × 1 1 1 1 1 …

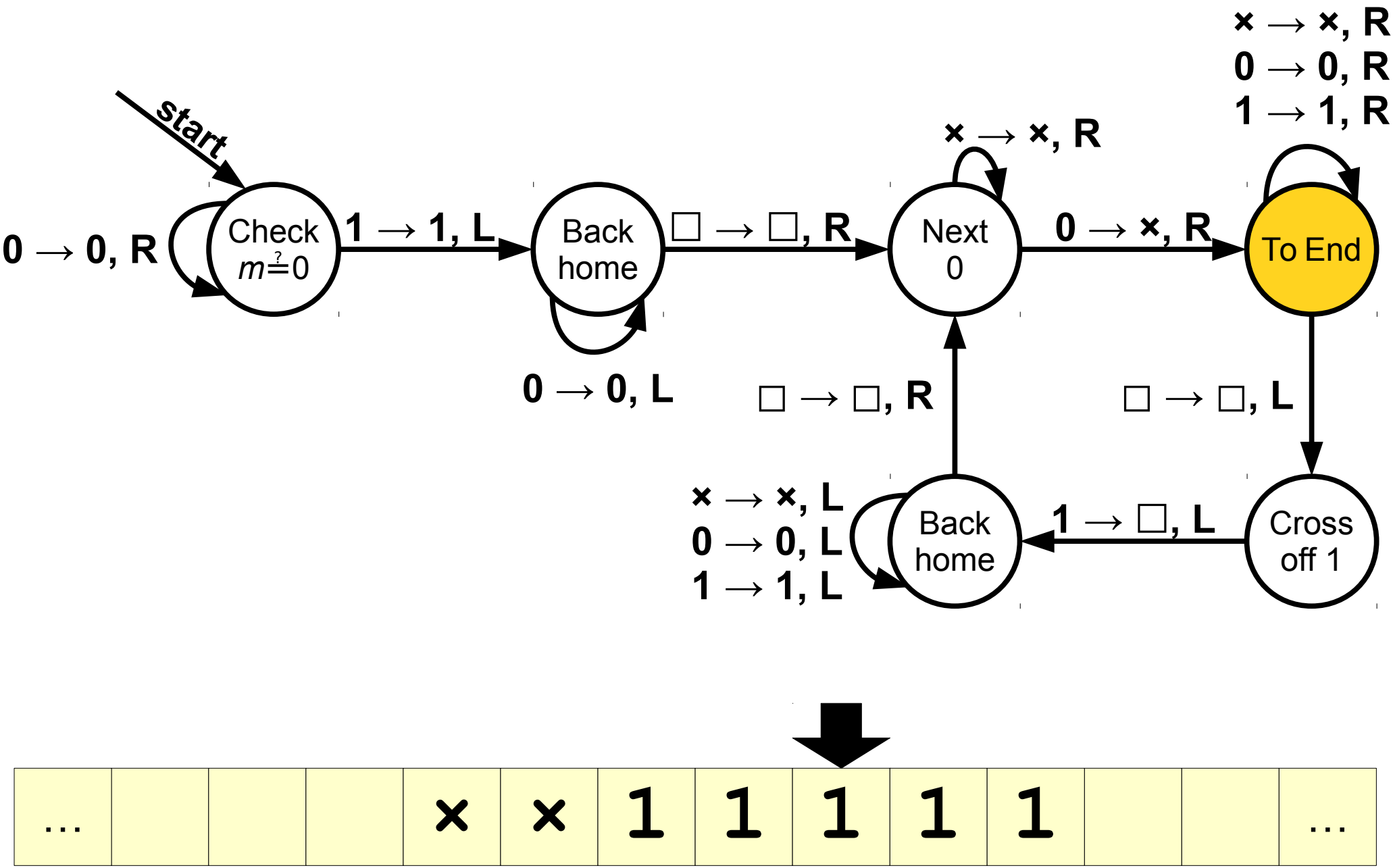
start
Check
m ?= 0
0 → 0, R
1 → 1, L
Back
home
0 → 0, L
□ → □, R
Next
0
× → ×, R
0 → ×, R
To End
× → ×, R
0 → 0, R
1 → 1, R
□ → □, L
Cross
off 1
1 → □, L
Back
home
× → ×, L
0 → 0, L
1 → 1, L
□ → □, R
… × × 1 1 1 1 1 …

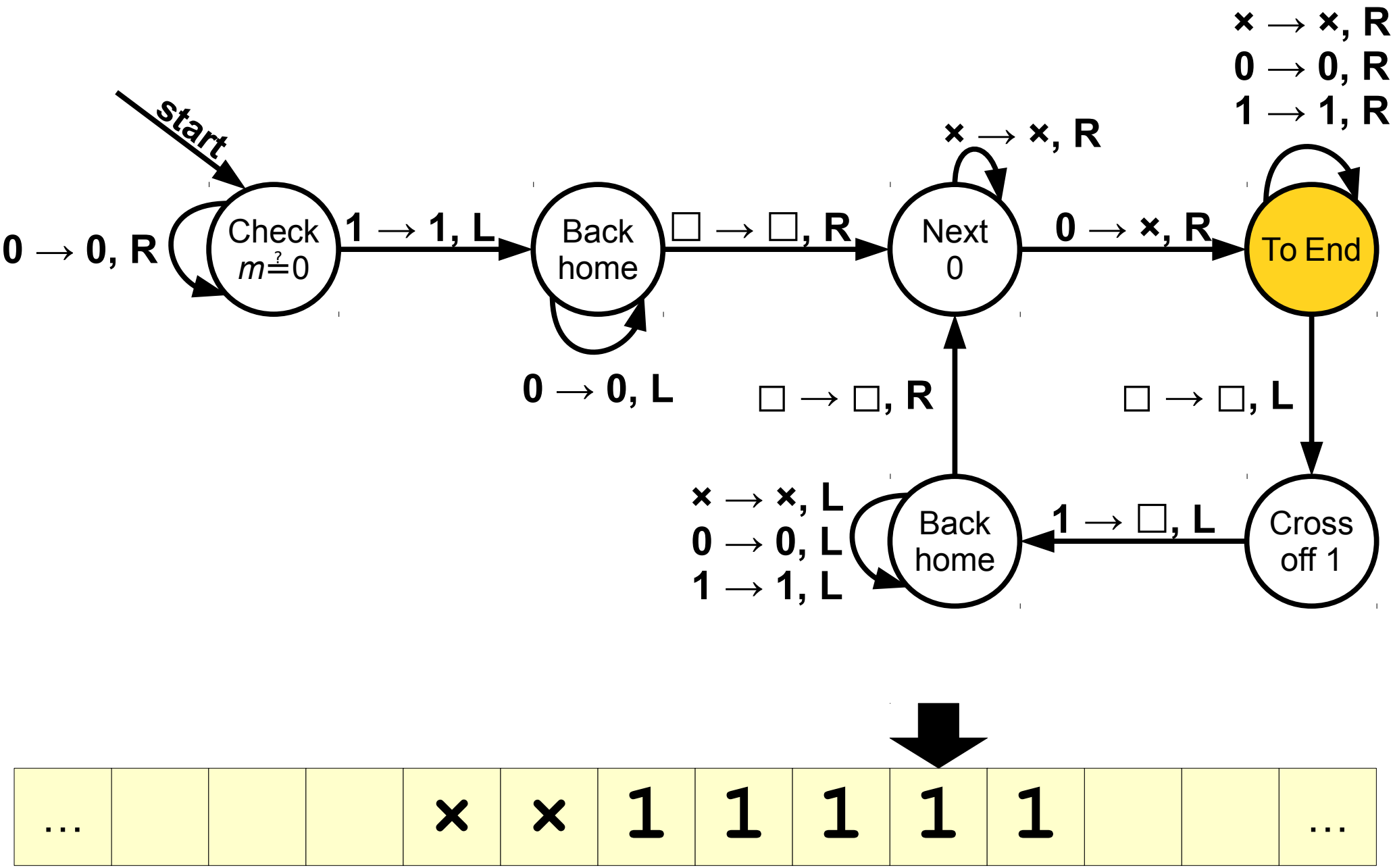
start
Check
m ?= 0
0 → 0, R
1 → 1, L
Back
home
0 → 0, L
□ → □, R
Next
0
× → ×, R
0 → ×, R
To End
× → ×, R
0 → 0, R
1 → 1, R
□ → □, L
Cross
off 1
1 → □, L
Back
home
× → ×, L
0 → 0, L
1 → 1, L
□ → □, R
… × × 1 1 1 1 1 …

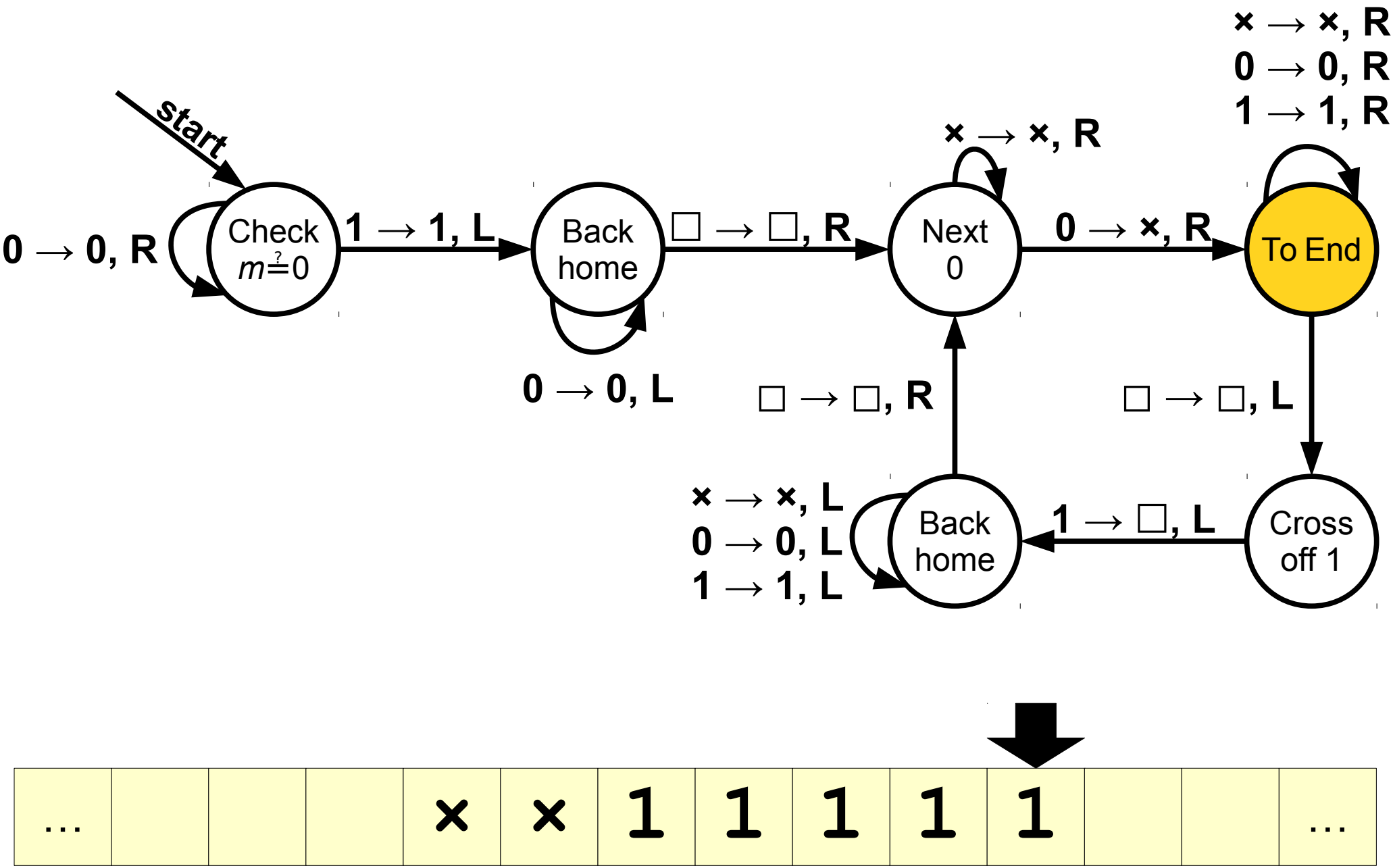
start
Check
m ?= 0
0 → 0, R
1 → 1, L
Back
home
0 → 0, L
□ → □, R
Next
0
× → ×, R
0 → ×, R
To End
× → ×, R
0 → 0, R
1 → 1, R
□ → □, L
Cross
off 1
1 → □, L
Back
home
× → ×, L
0 → 0, L
1 → 1, L
□ → □, R
… × × 1 1 1 1 1 …

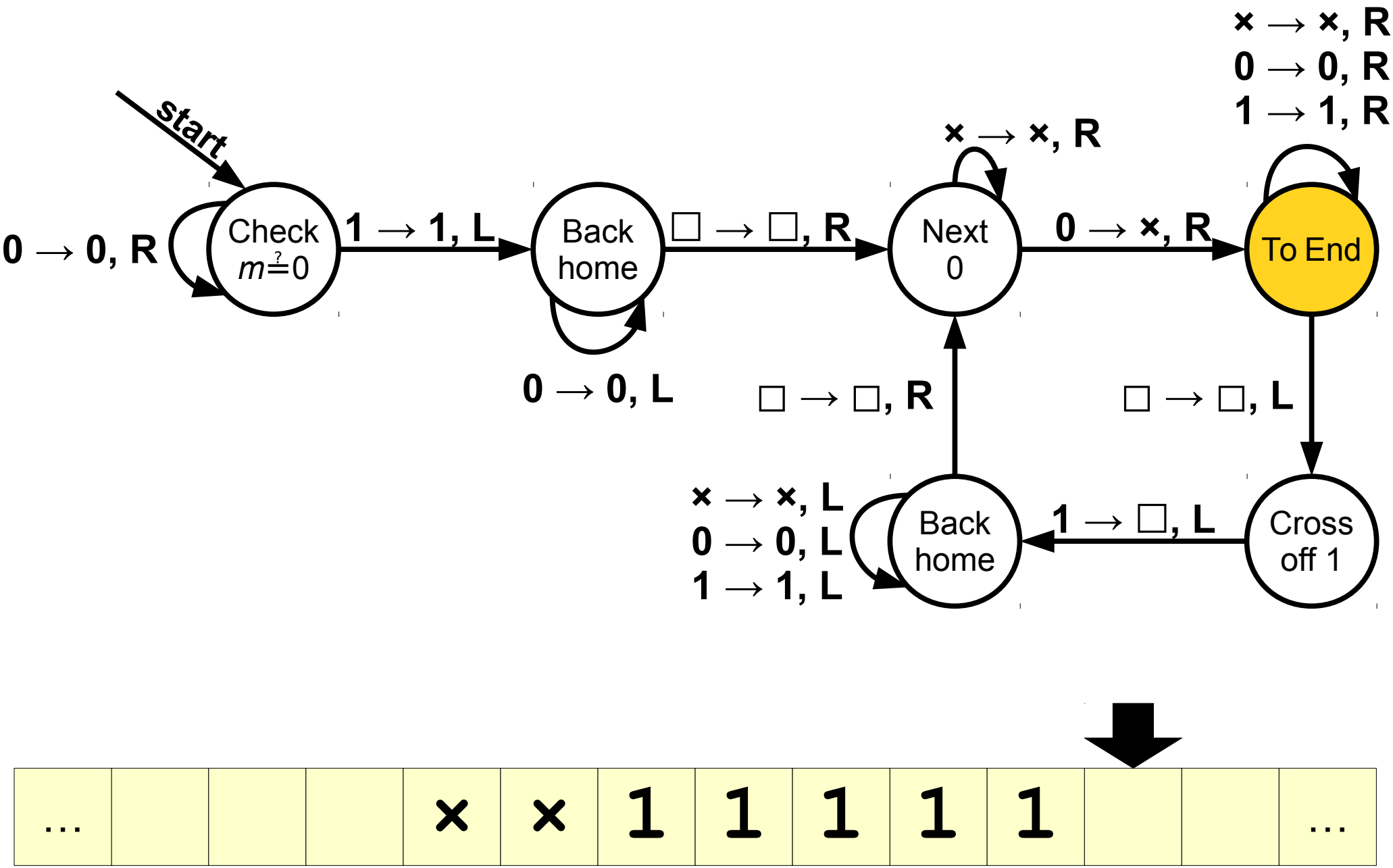
start
Check
m ?= 0
0 → 0, R
1 → 1, L
Back
home
0 → 0, L
□ → □, R
Next
0
× → ×, R
0 → ×, R
To End
× → ×, R
0 → 0, R
1 → 1, R
□ → □, L
Cross
off 1
1 → □, L
Back
home
× → ×, L
0 → 0, L
1 → 1, L
□ → □, R
… × × 1 1 1 1 1 …

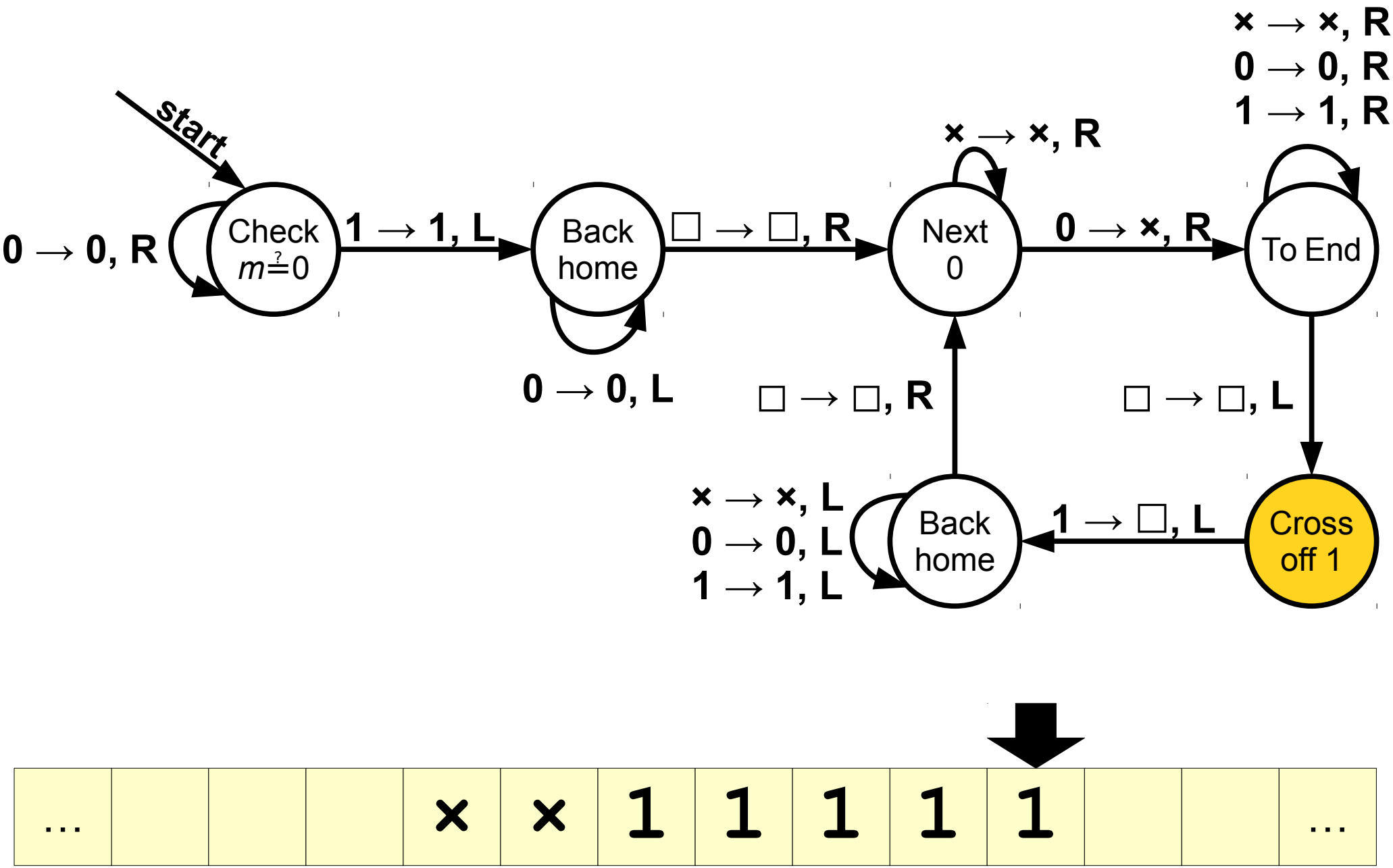
start
Check
m ?= 0
0 → 0, R
1 → 1, L
Back
home
0 → 0, L
□ → □, R
Next
0
× → ×, R
0 → ×, R
To End
× → ×, R
0 → 0, R
1 → 1, R
□ → □, L
Cross
off 1
1 → □, L
Back
home
× → ×, L
0 → 0, L
1 → 1, L
□ → □, R
… × × 1 1 1 1 1 …

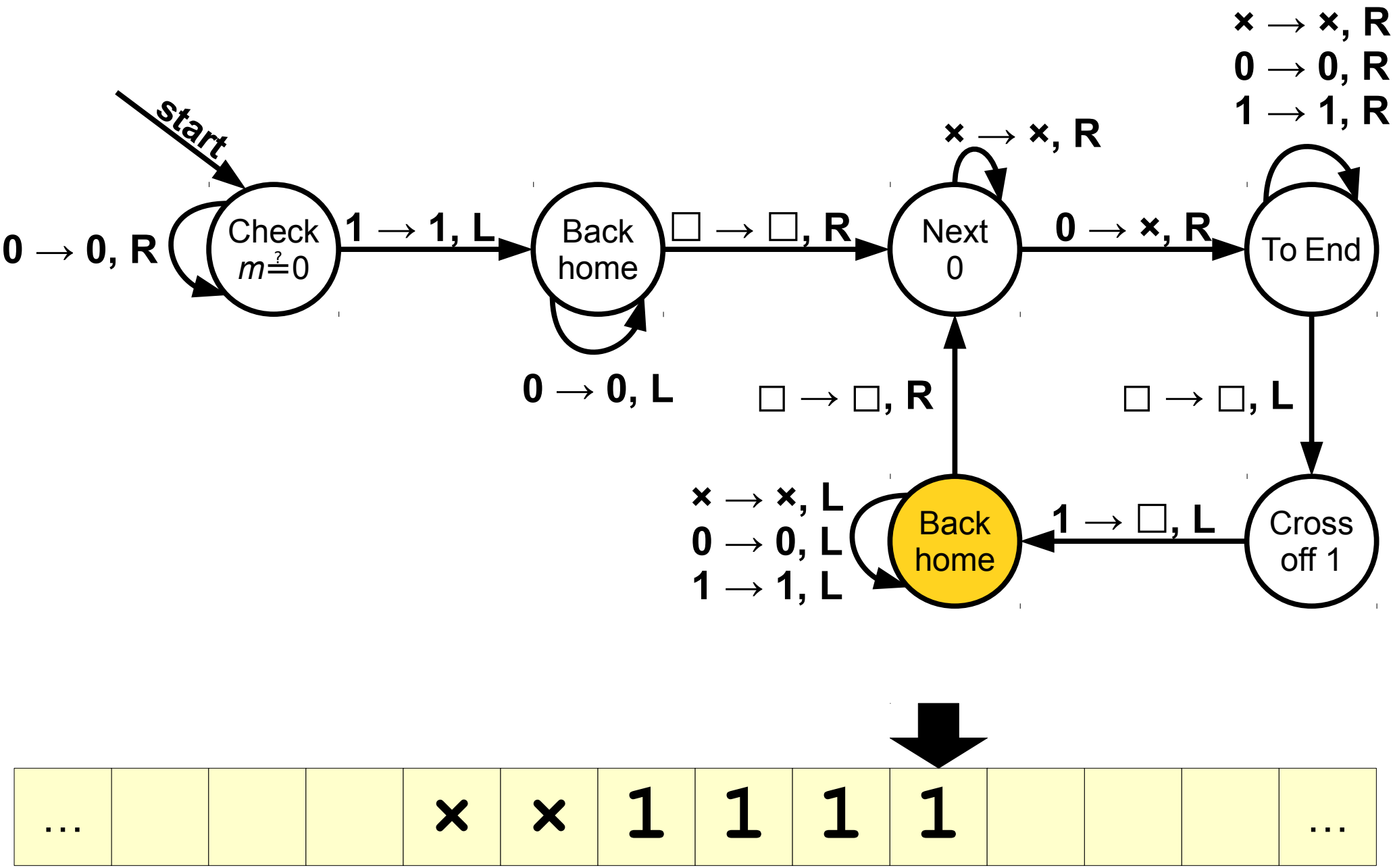
start
Check
m ?= 0
0 → 0, R
1 → 1, L
Back
home
0 → 0, L
□ → □, R
Next
0
× → ×, R
0 → ×, R
To End
× → ×, R
0 → 0, R
1 → 1, R
□ → □, L
Cross
off 1
1 → □, L
Back
home
□ → □, R
× → ×, L
0 → 0, L
1 → 1, L
… × × 1 1 1 1 …

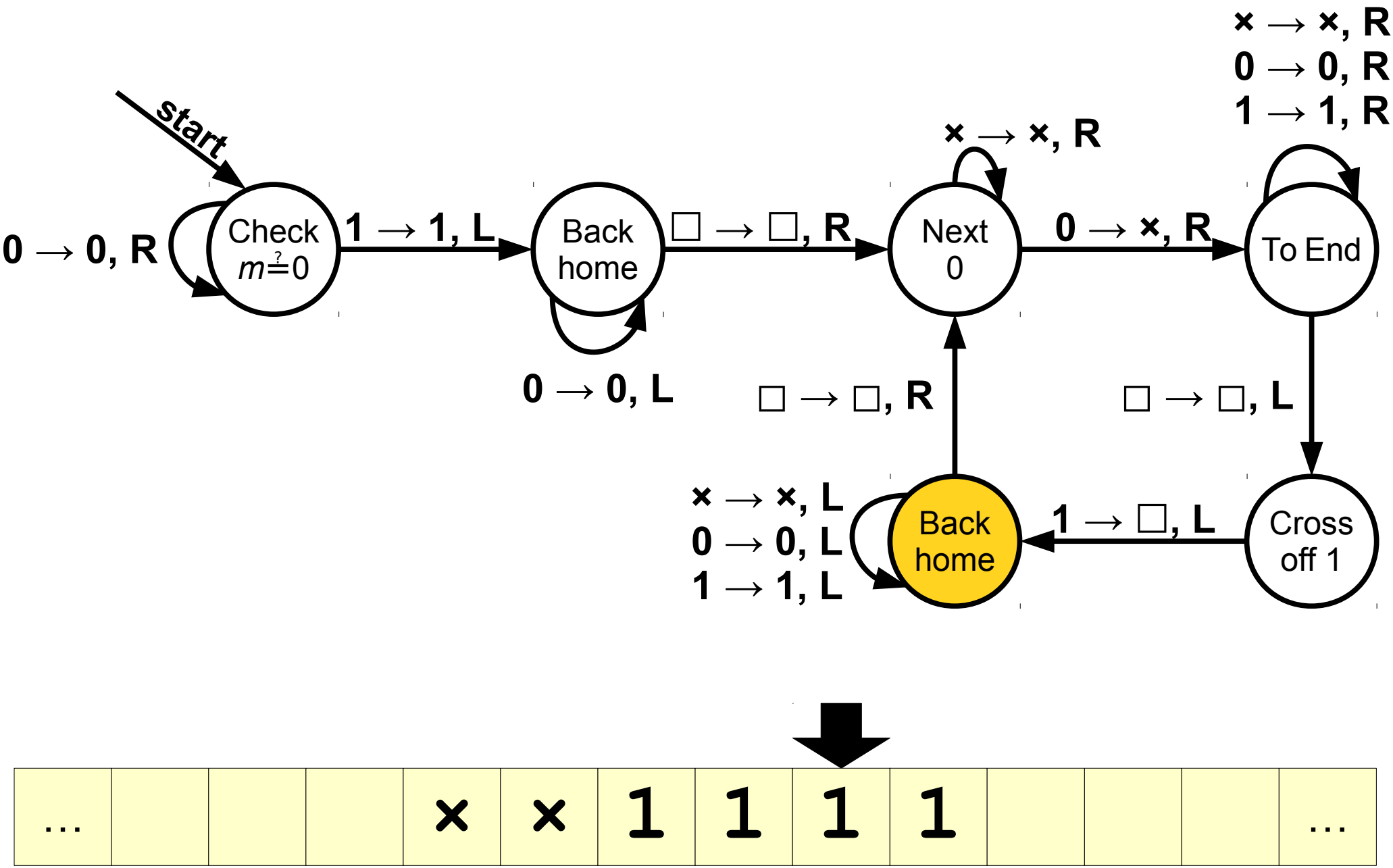
start
Check
m ?= 0
0 → 0, R
1 → 1, L
Back
home
0 → 0, L
□ → □, R
Next
0
× → ×, R
0 → ×, R
To End
× → ×, R
0 → 0, R
1 → 1, R
□ → □, L
Cross
off 1
1 → □, L
Back
home
× → ×, L
0 → 0, L
1 → 1, L
□ → □, R
… × × 1 1 1 1 …

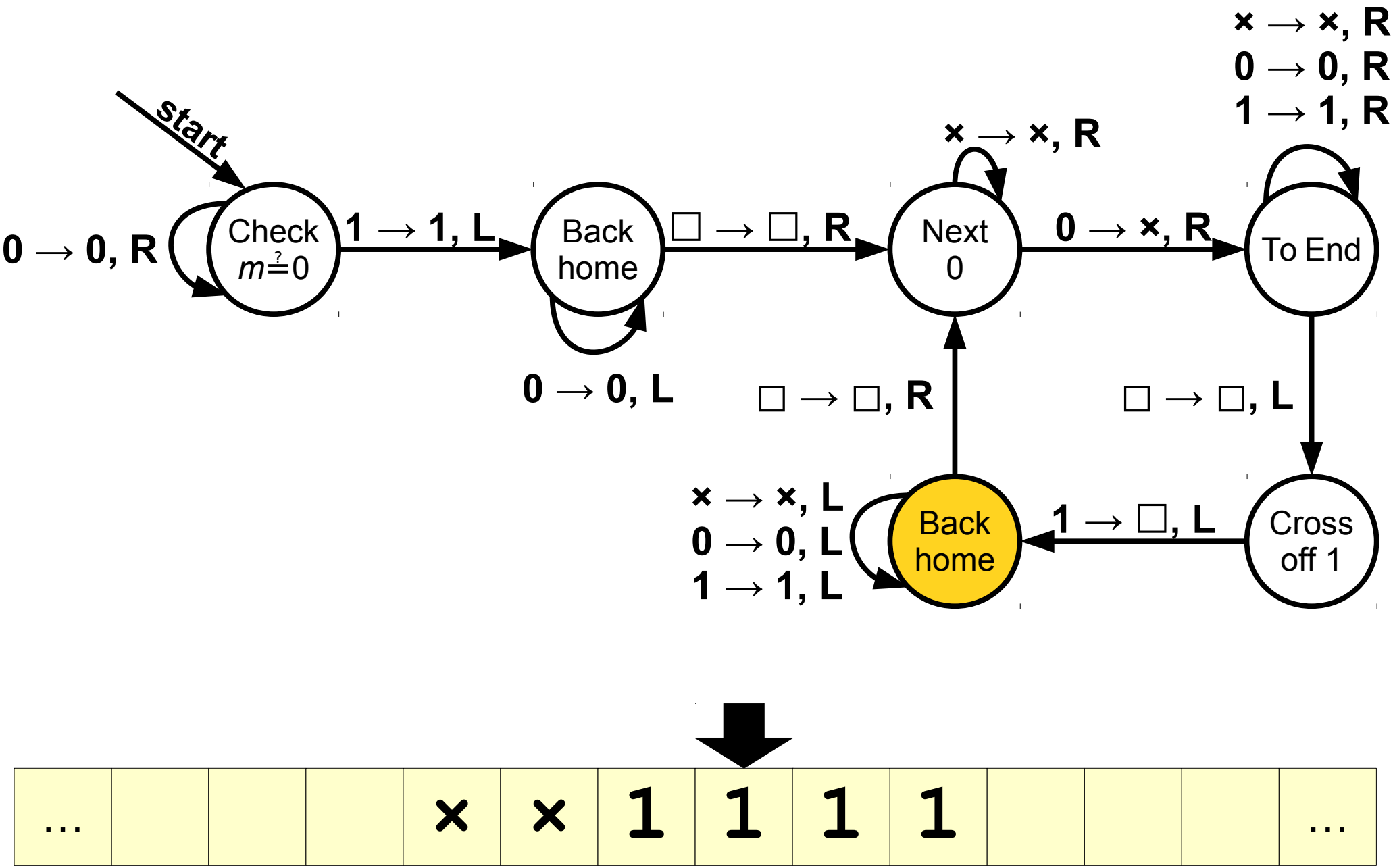
start
Check
m ?= 0
0 → 0, R
1 → 1, L
Back
home
0 → 0, L
□ → □, R
Next
0
× → ×, R
0 → ×, R
To End
× → ×, R
0 → 0, R
1 → 1, R
□ → □, L
Cross
off 1
1 → □, L
Back
home
× → ×, L
0 → 0, L
1 → 1, L
□ → □, R
… × × 1 1 1 1 …

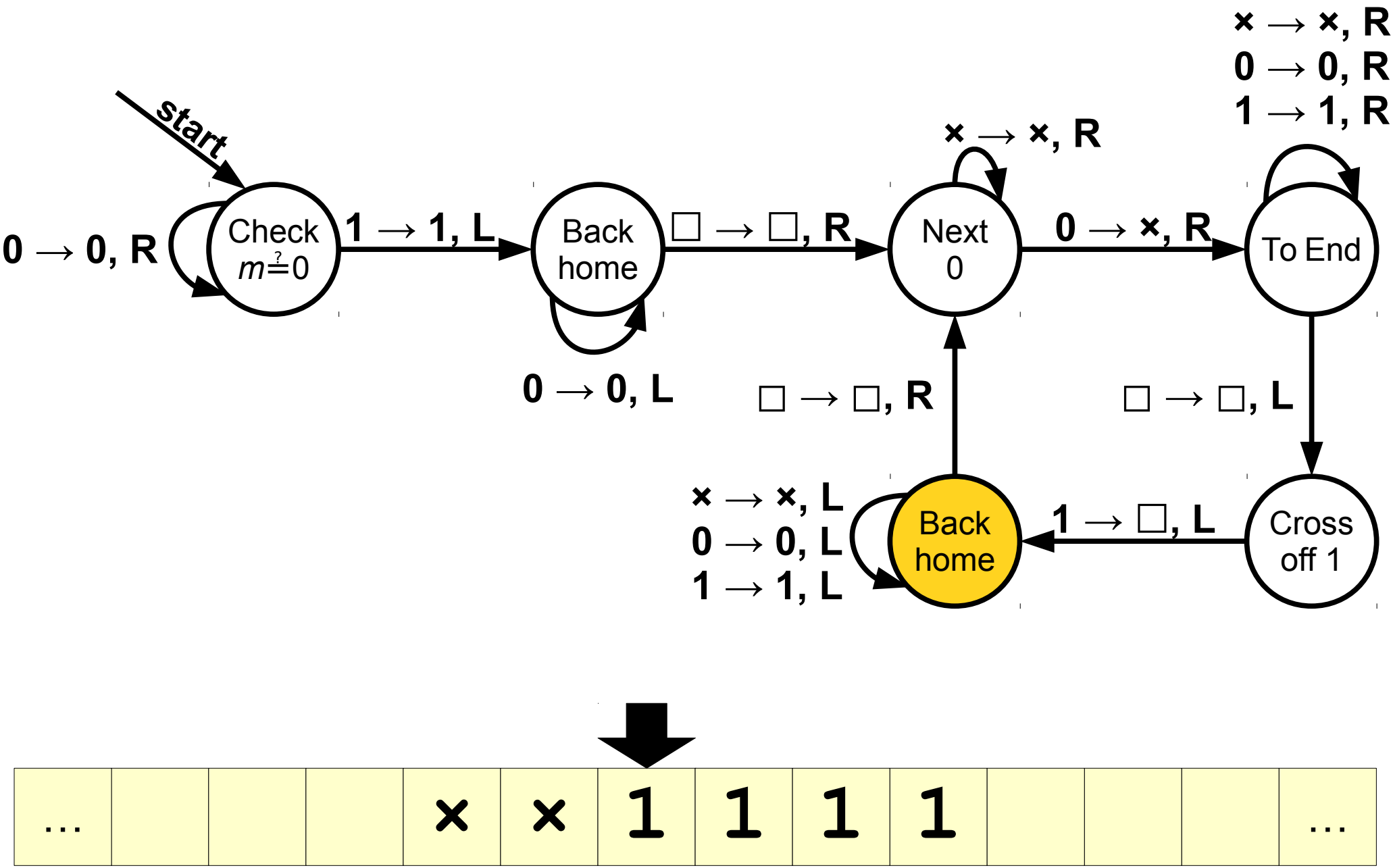
start
Check
m ?= 0
0 → 0, R
1 → 1, L
Back
home
0 → 0, L
□ → □, R
Next
0
× → ×, R
0 → ×, R
To End
× → ×, R
0 → 0, R
1 → 1, R
□ → □, L
Cross
off 1
1 → □, L
Back
home
□ → □, R
× → ×, L
0 → 0, L
1 → 1, L
… × × 1 1 1 1 …

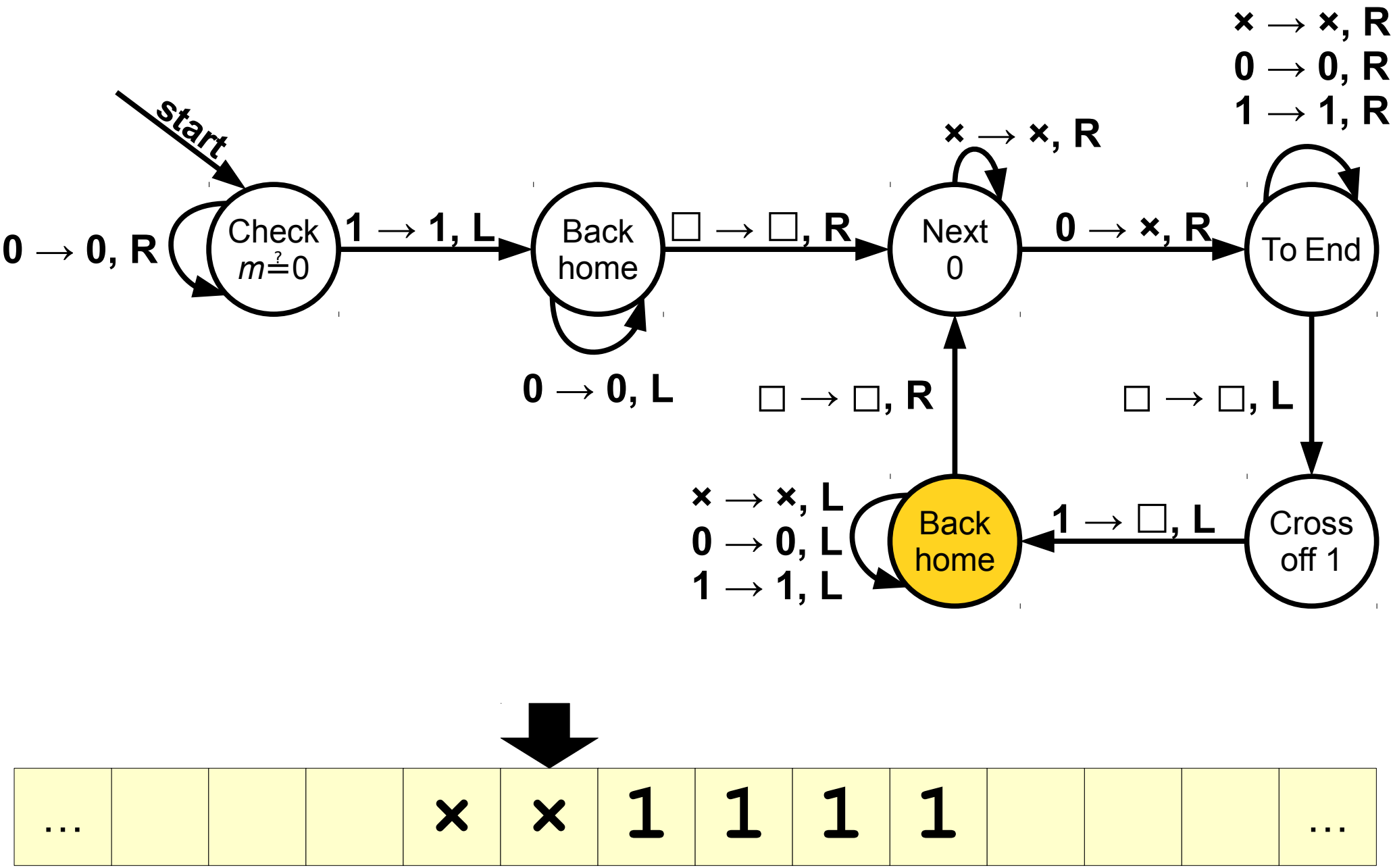
start
Check
m ?= 0
0 → 0, R
1 → 1, L
Back
home
0 → 0, L
□ → □, R
Next
0
× → ×, R
0 → ×, R
To End
× → ×, R
0 → 0, R
1 → 1, R
□ → □, L
Cross
off 1
1 → □, L
Back
home
□ → □, R
× → ×, L
0 → 0, L
1 → 1, L
… × × 1 1 1 1 …

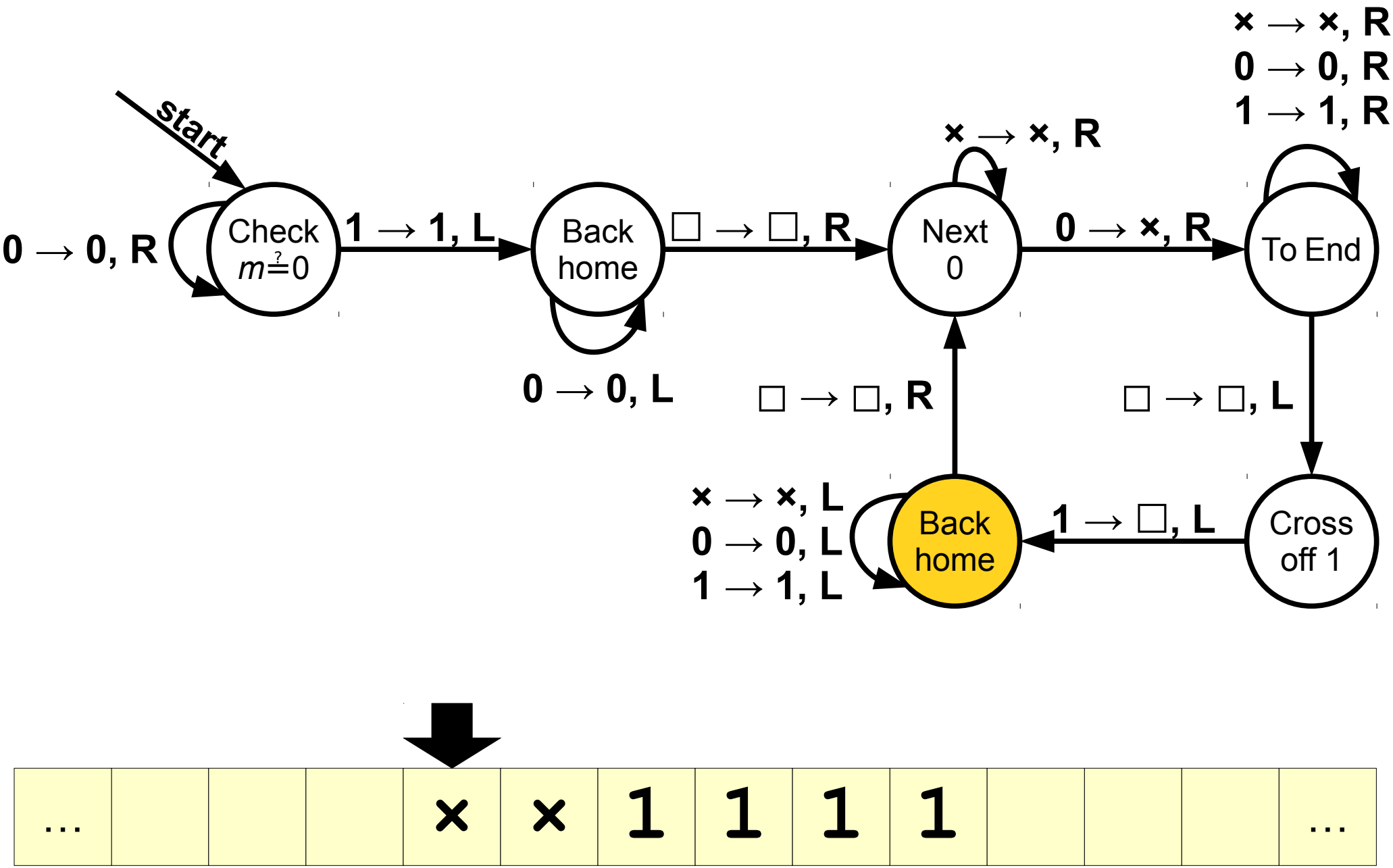
start
Check
m ?= 0
0 → 0, R
1 → 1, L
Back
home
0 → 0, L
□ → □, R
Next
0
× → ×, R
0 → ×, R
To End
× → ×, R
0 → 0, R
1 → 1, R
□ → □, L
Cross
off 1
1 → □, L
Back
home
□ → □, R
× → ×, L
0 → 0, L
1 → 1, L
… × × 1 1 1 1 …

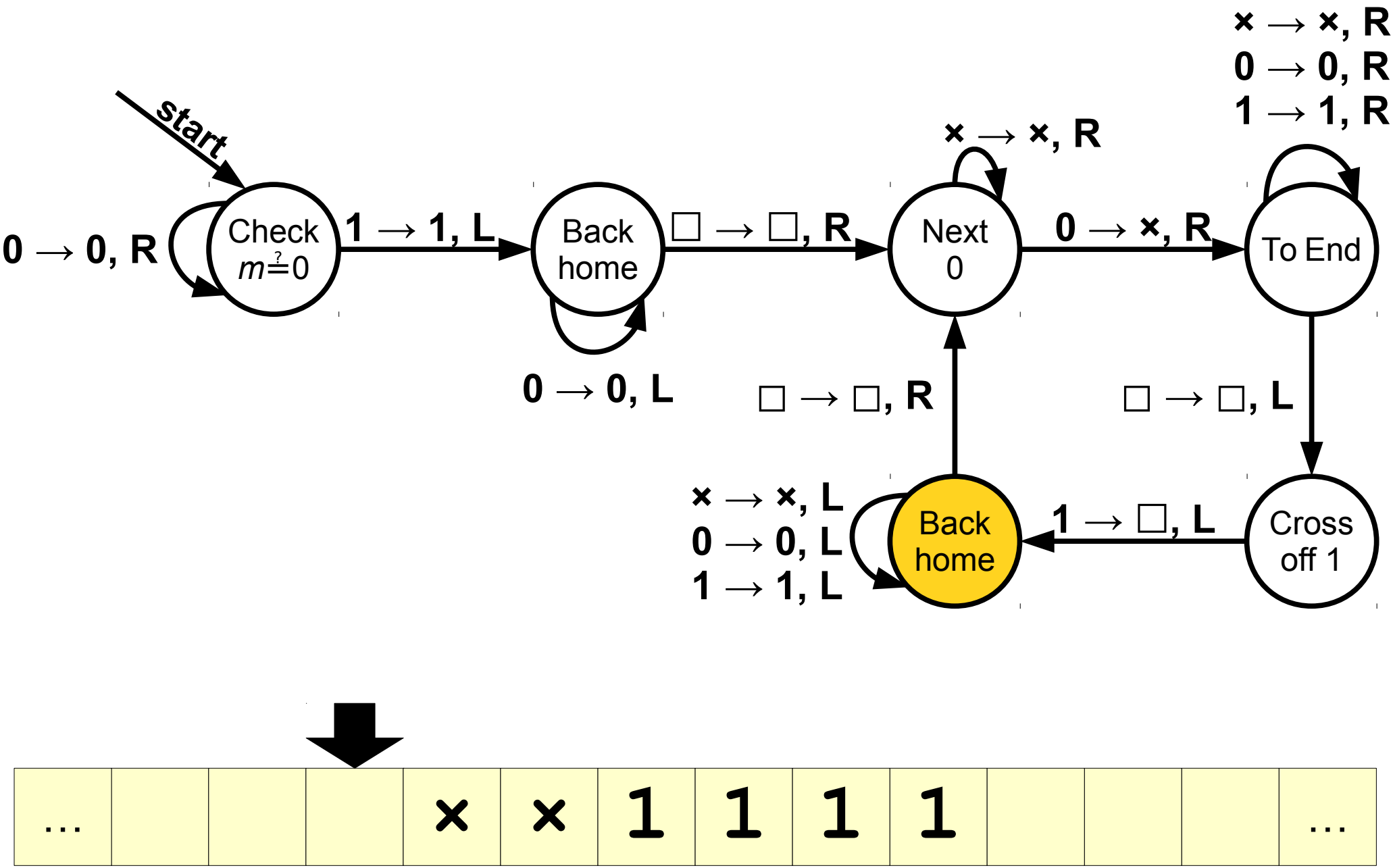
start
Check
m ?= 0
0 → 0, R
1 → 1, L
Back
home
0 → 0, L
□ → □, R
Next
0
× → ×, R
0 → ×, R
To End
× → ×, R
0 → 0, R
1 → 1, R
□ → □, L
Cross
off 1
1 → □, L
Back
home
□ → □, R
× → ×, L
0 → 0, L
1 → 1, L
… × × 1 1 1 1 …

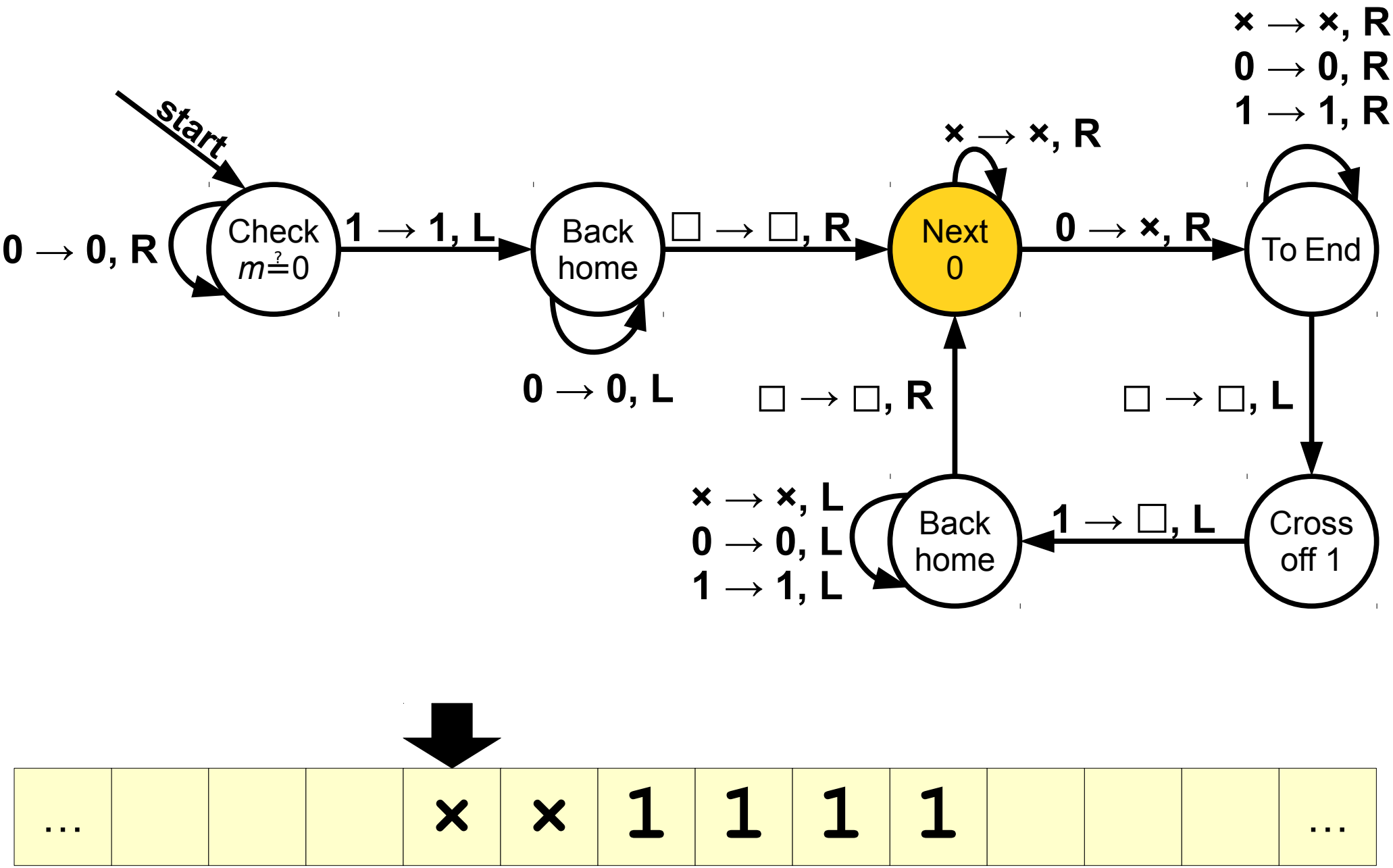
start
Check
m=?0
0 → 0, R
1 → 1, L
Back
home
0 → 0, L
□ → □, R
Next
0
× → ×, R
0 → ×, R
To End
× → ×, R
0 → 0, R
1 → 1, R
□ → □, L
Cross
off 1
1 → □, L
Back
home
× → ×, L
0 → 0, L
1 → 1, L
□ → □, R
...
×
×
1
1
1
1
...

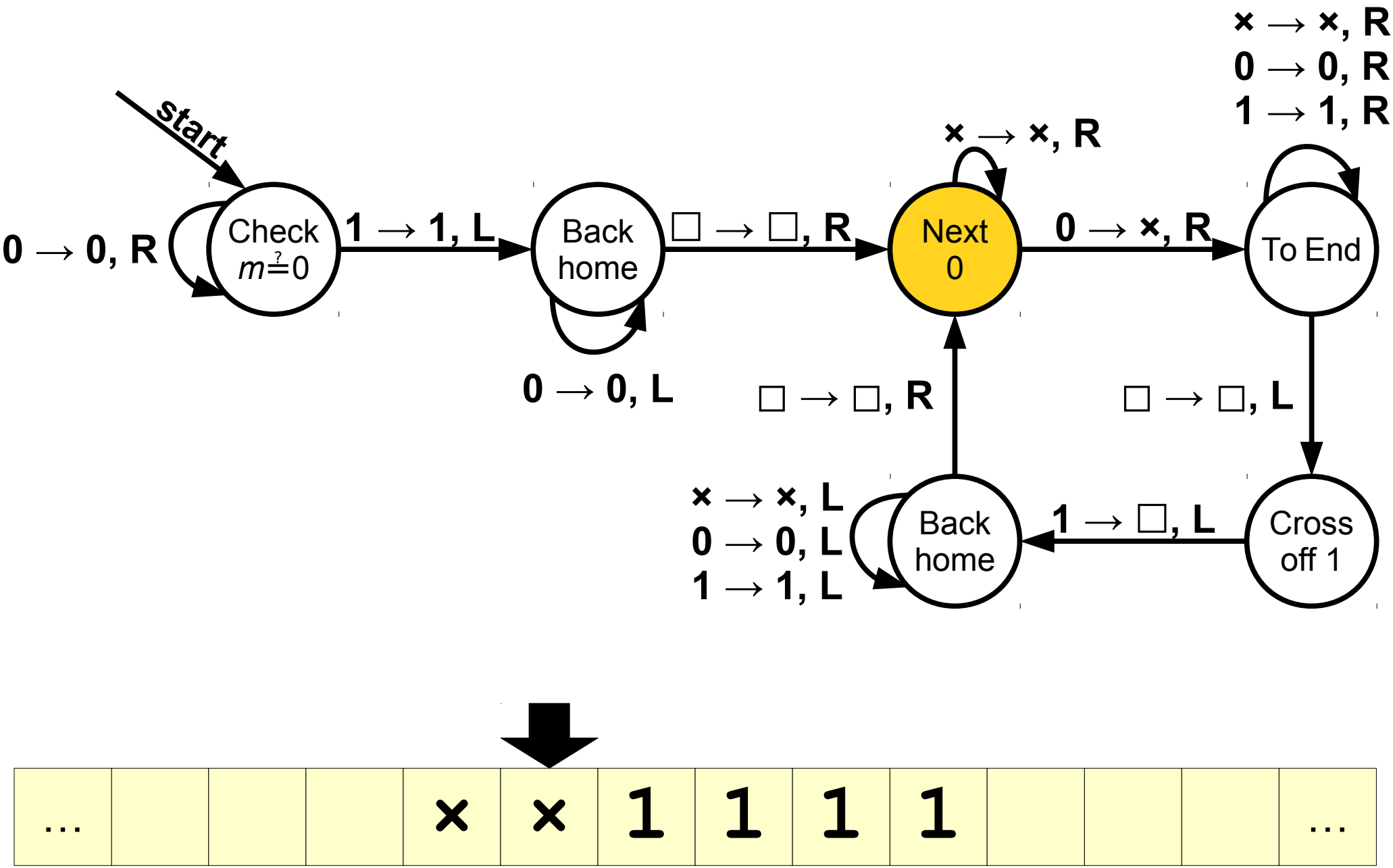
start
Check
m ?= 0
0 → 0, R
1 → 1, L
Back
home
0 → 0, L
□ → □, R
Next
0
× → ×, R
0 → ×, R
To End
× → ×, R
0 → 0, R
1 → 1, R
□ → □, L
Cross
off 1
1 → □, L
Back
home
× → ×, L
0 → 0, L
1 → 1, L
□ → □, R
… × × 1 1 1 1 …

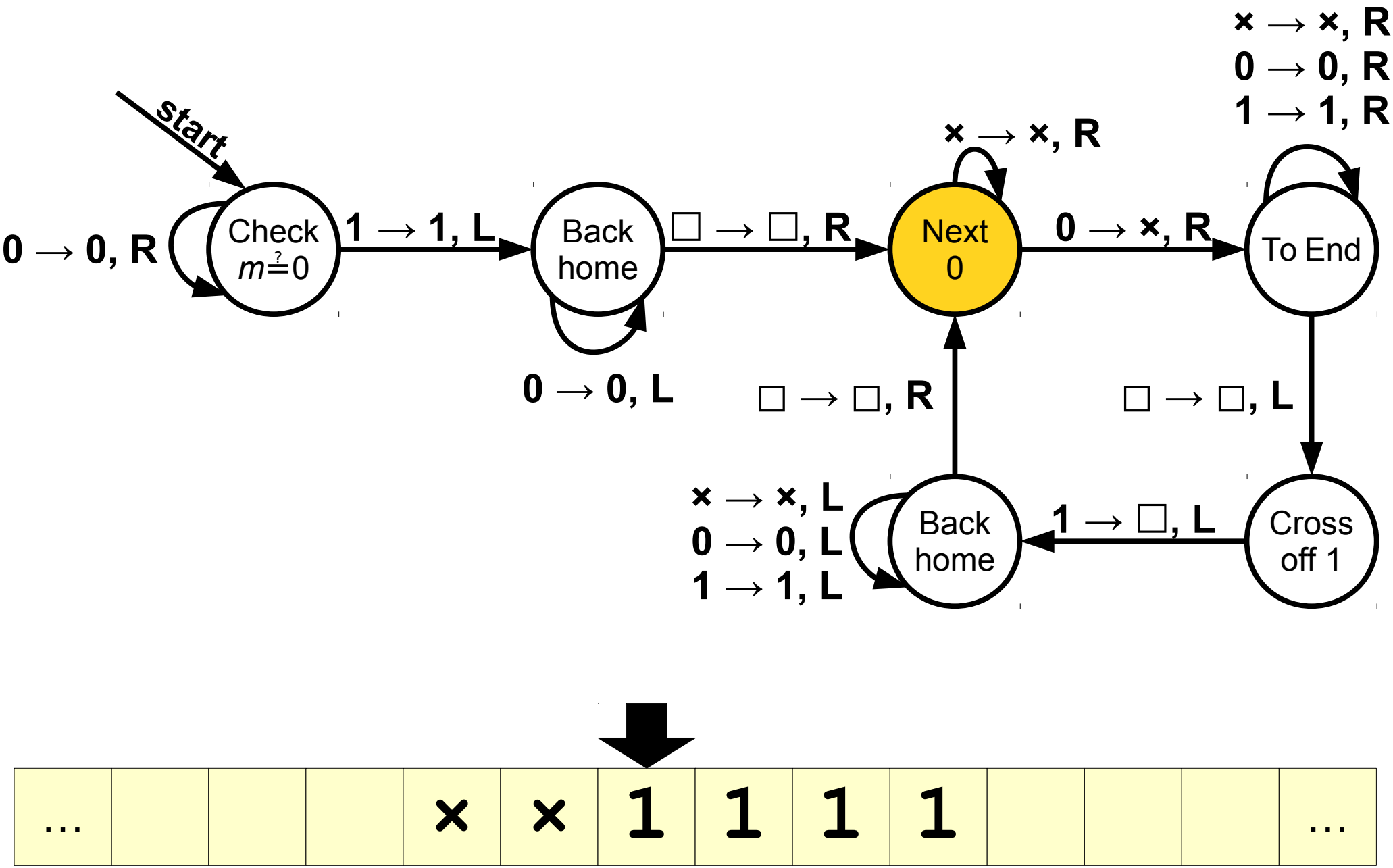
start
Check
m ?= 0
0 → 0, R
1 → 1, L
Back
home
0 → 0, L
□ → □, R
Next
0
× → ×, R
0 → ×, R
To End
× → ×, R
0 → 0, R
1 → 1, R
□ → □, L
Cross
off 1
1 → □, L
Back
home
× → ×, L
0 → 0, L
1 → 1, L
□ → □, R
… × × 1 1 1 1 …

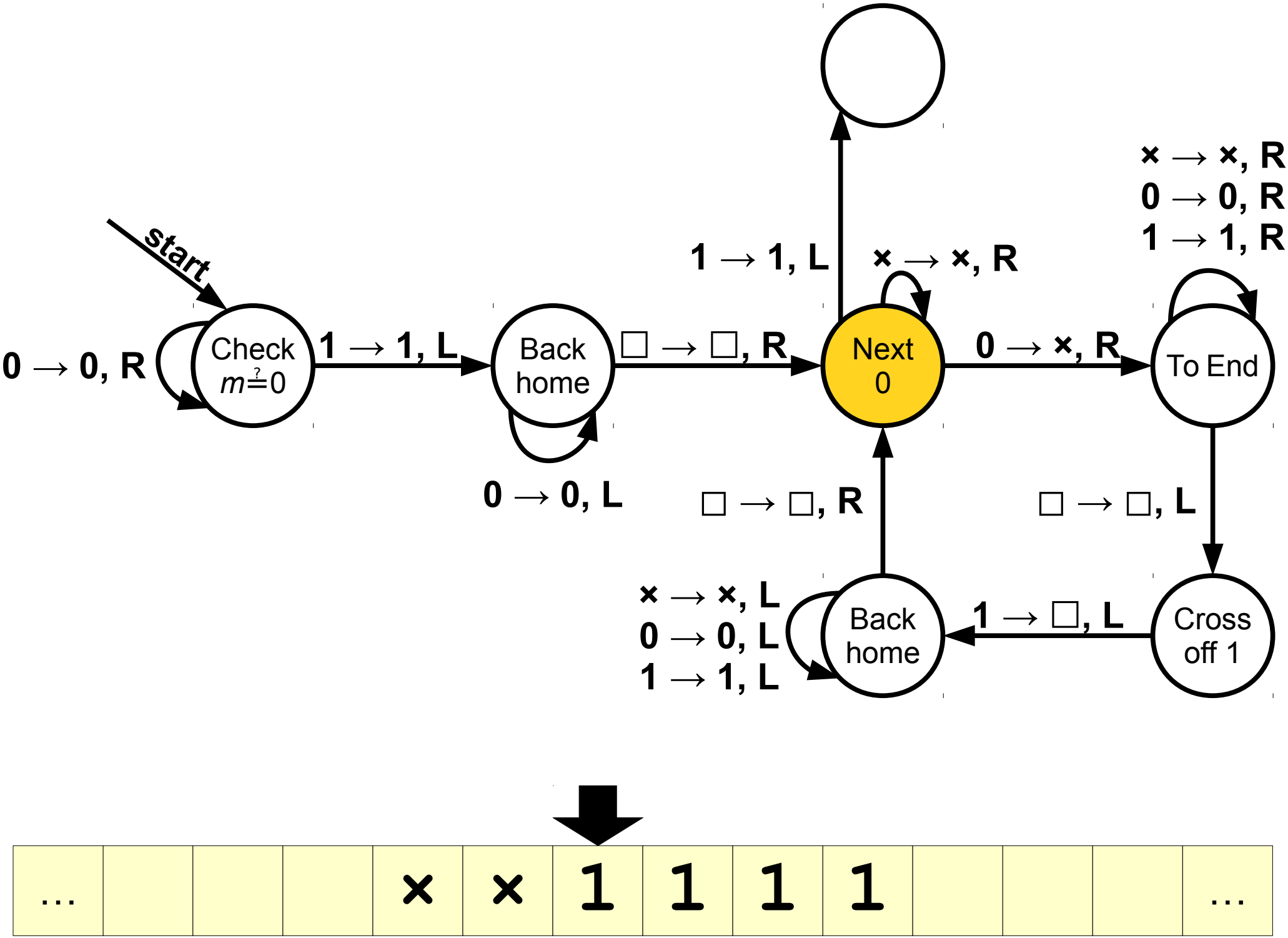
start
Check
m ≟ 0
0 → 0, R
1 → 1, L
Back
home
0 → 0, L
□ → □, R
1 → 1, L
Next
0
× → ×, R
0 → ×, R
To End
× → ×, R
0 → 0, R
1 → 1, R
□ → □, L
Cross
off 1
1 → □, L
Back
home
× → ×, L
0 → 0, L
1 → 1, L
□ → □, R
... × × 1 1 1 1 ...

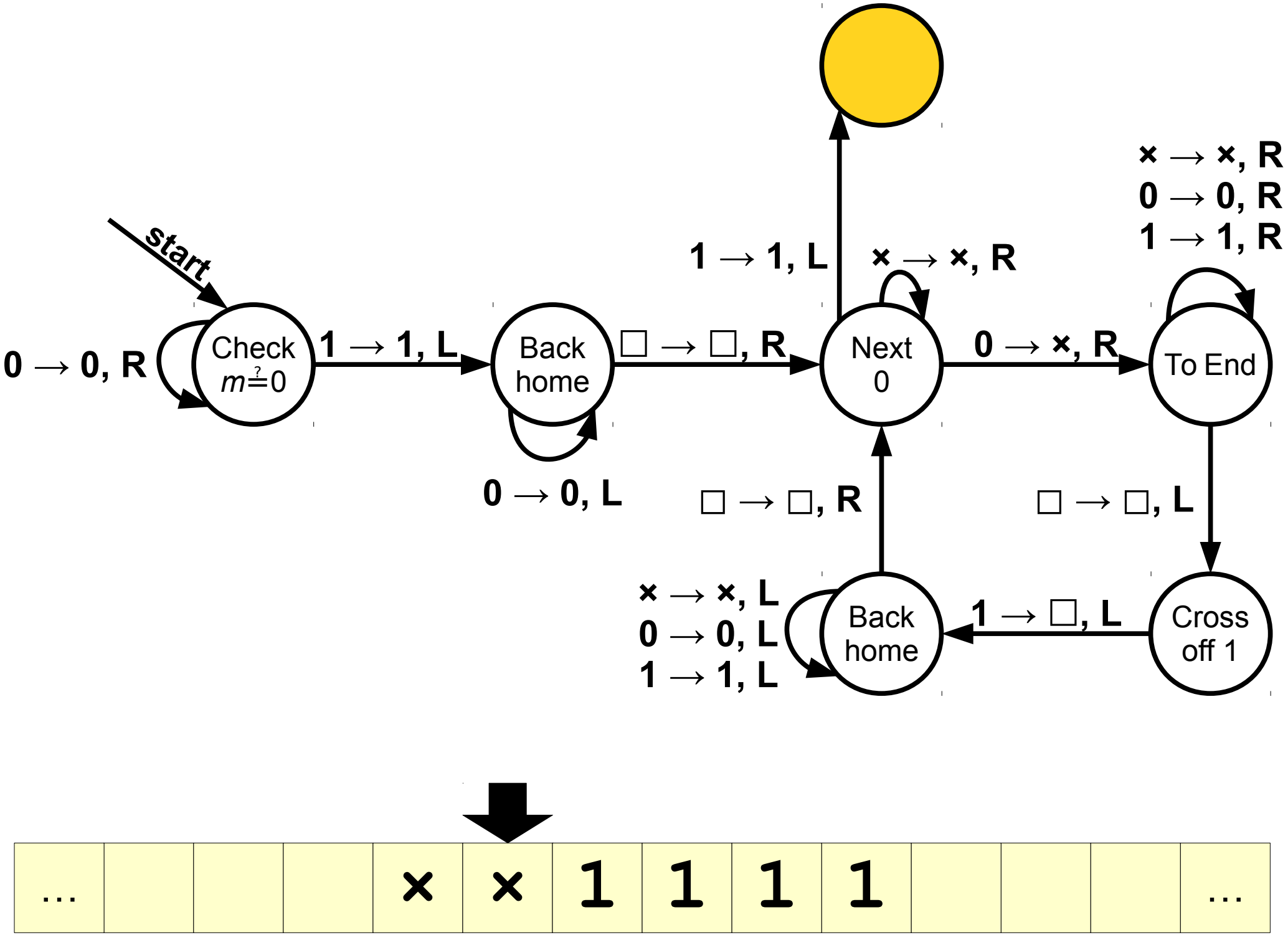
start
Check
m ?= 0
0 → 0, R
1 → 1, L
Back
home
0 → 0, L
□ → □, R
1 → 1, L
Next
0
× → ×, R
0 → ×, R
To End
× → ×, R
0 → 0, R
1 → 1, R
□ → □, L
Cross
off 1
1 → □, L
Back
home
× → ×, L
0 → 0, L
1 → 1, L
□ → □, R
… × × 1 1 1 1 …

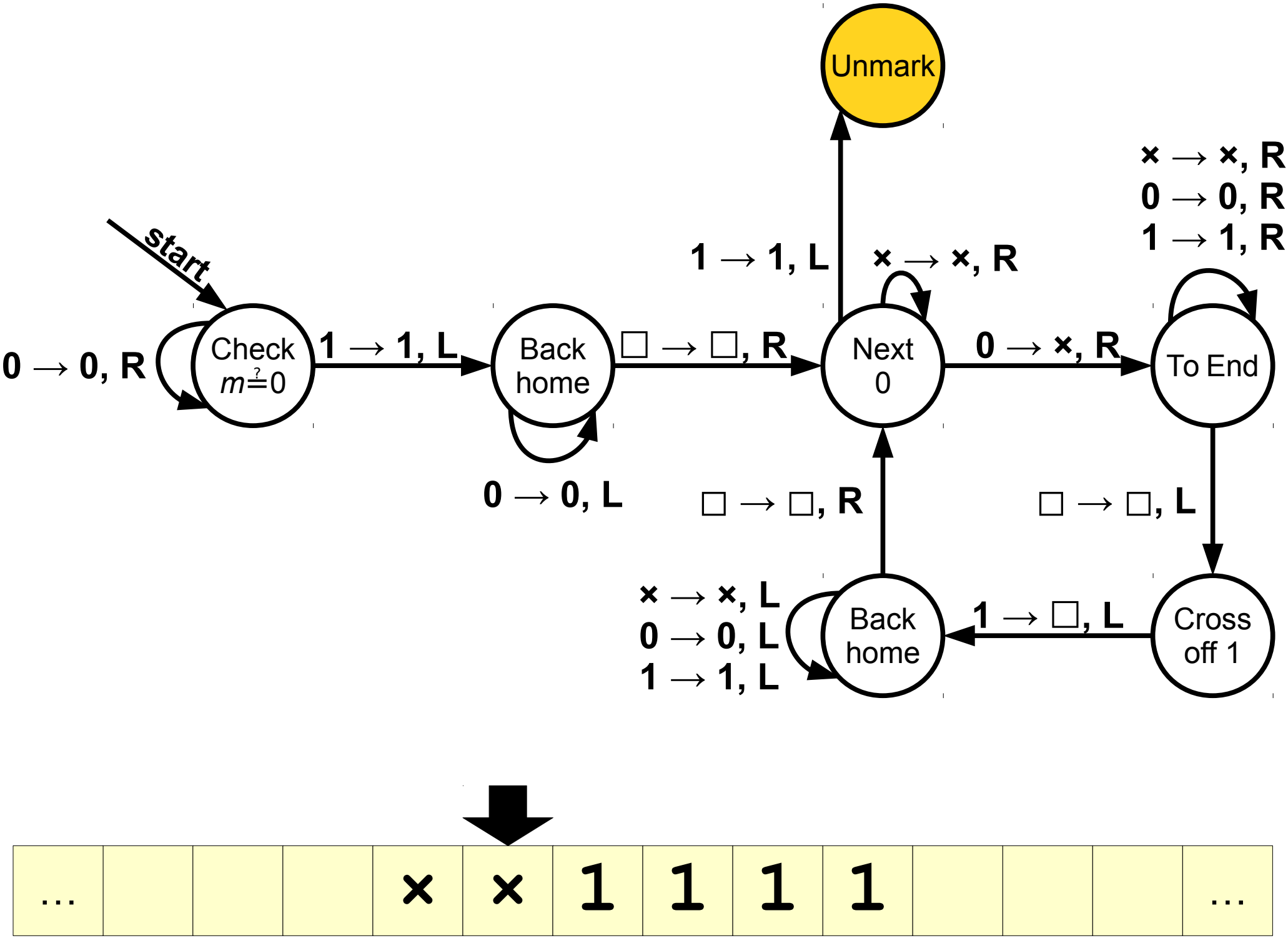
Unmark
start
Check
m ?= 0
0 → 0, R
1 → 1, L
Back
home
0 → 0, L
□ → □, R
1 → 1, L
Next
0
× → ×, R
0 → ×, R
To End
× → ×, R
0 → 0, R
1 → 1, R
□ → □, L
Cross
off 1
1 → □, L
Back
home
× → ×, L
0 → 0, L
1 → 1, L
□ → □, R
... × × 1 1 1 1 ...

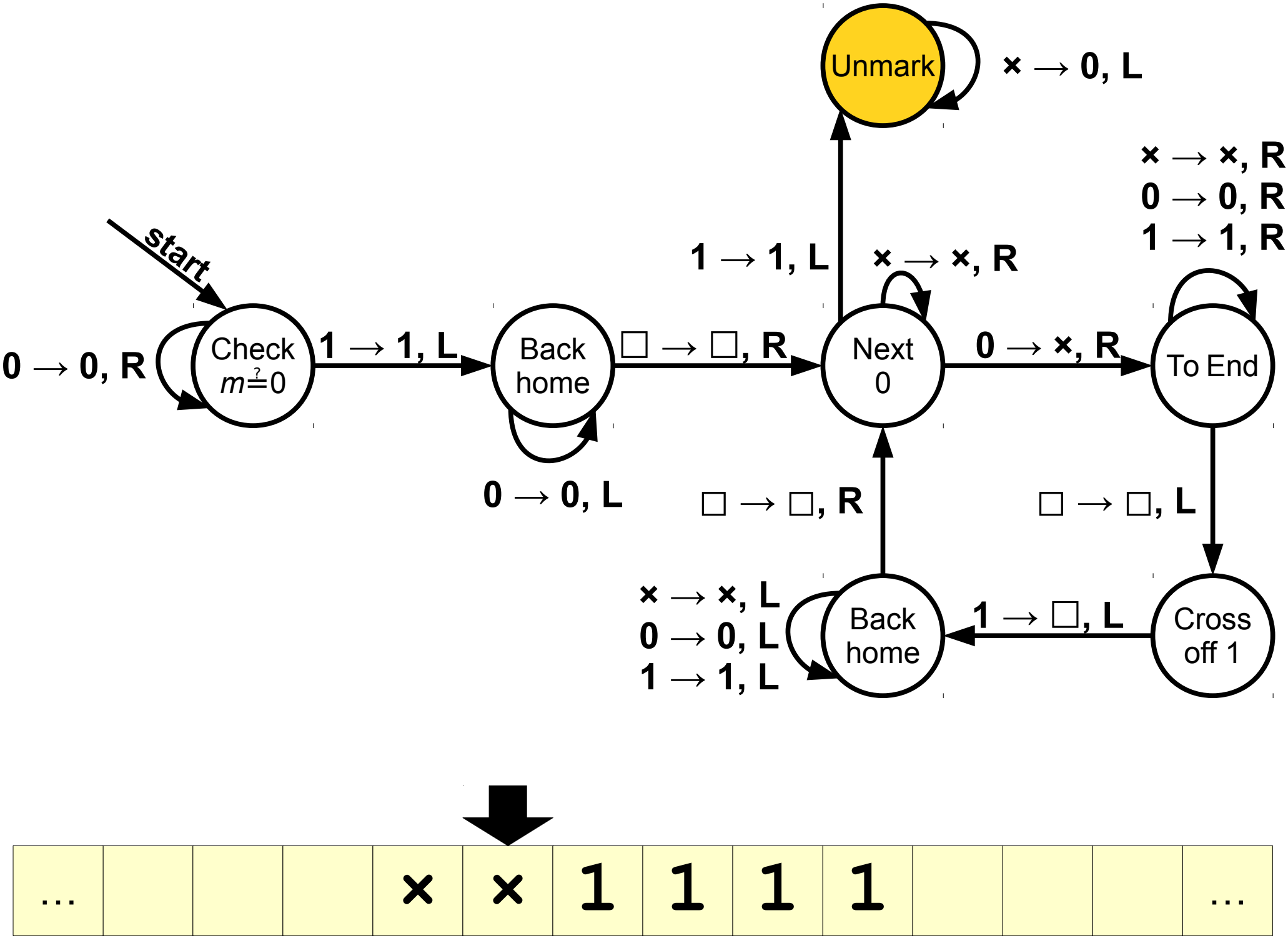
start
Check
m=?0
0 → 0, R
1 → 1, L
Back
home
0 → 0, L
□ → □, R
Next
0
1 → 1, L
Unmark
× → 0, L
× → ×, R
0 → ×, R
To End
× → ×, R
0 → 0, R
1 → 1, R
□ → □, L
Cross
off 1
1 → □, L
Back
home
□ → □, R
× → ×, L
0 → 0, L
1 → 1, L
…
×
×
1
1
1
1
…

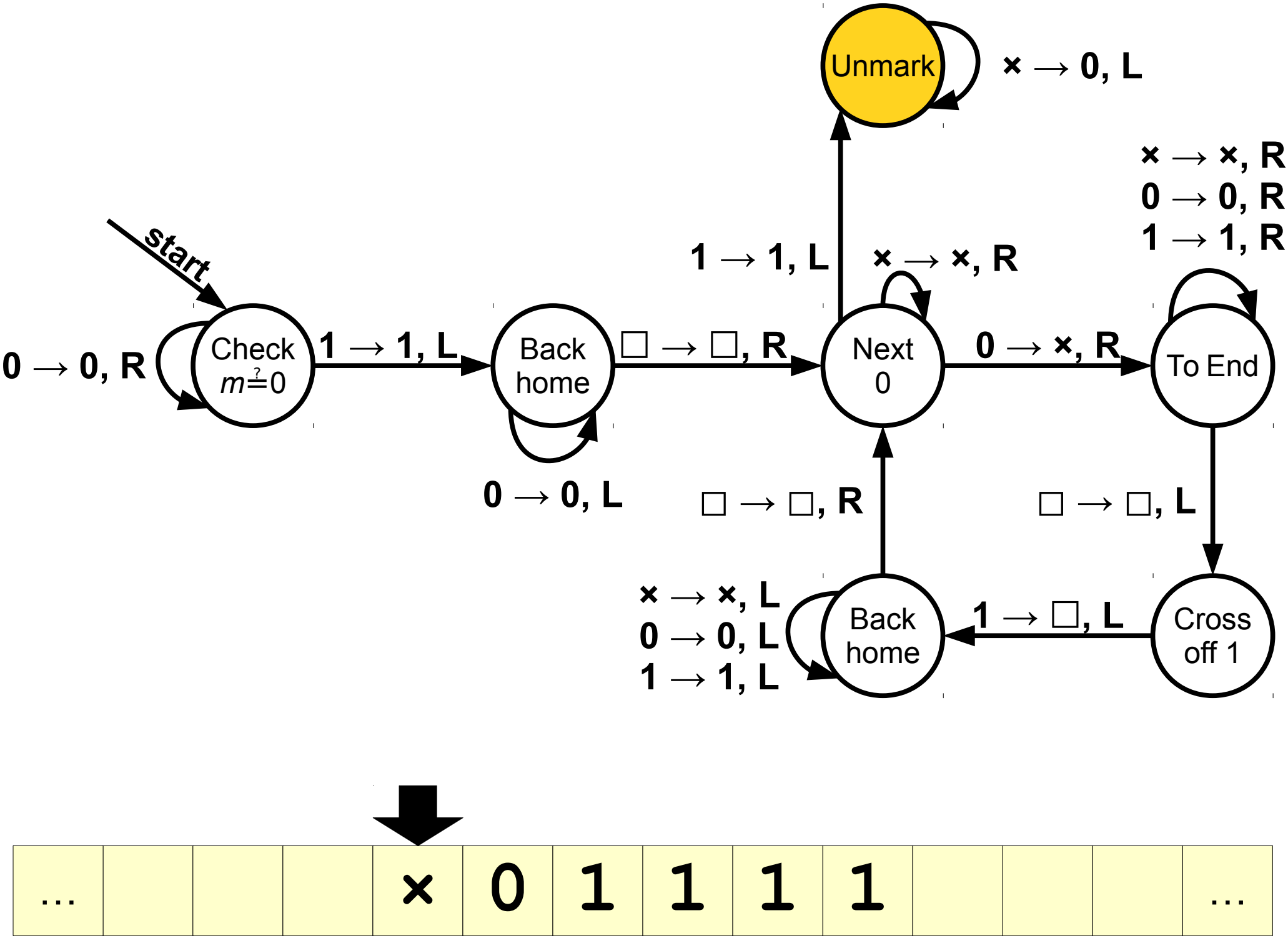
start
Check
m=?0
0 → 0, R
1 → 1, L
Back
home
0 → 0, L
□ → □, R
Next
0
1 → 1, L
× → ×, R
Unmark
× → 0, L
0 → ×, R
To End
× → ×, R
0 → 0, R
1 → 1, R
□ → □, L
Cross
off 1
1 → □, L
Back
home
× → ×, L
0 → 0, L
1 → 1, L
□ → □, R
…
×
0
1
1
1
1
…

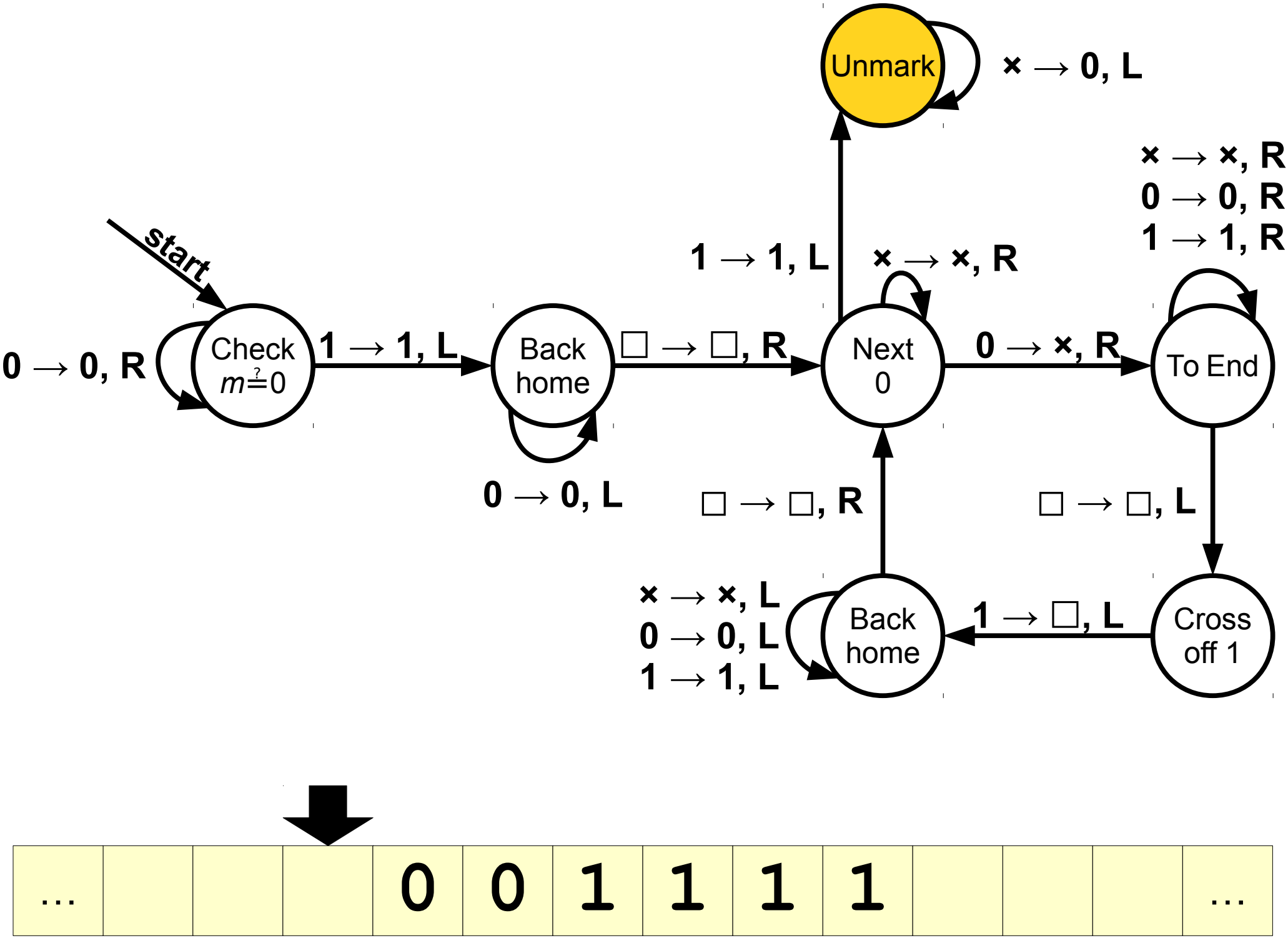
start
Check
m ?= 0
0 → 0, R
1 → 1, L
Back
home
0 → 0, L
□ → □, R
Next
0
1 → 1, L
× → ×, R
Unmark
× → 0, L
0 → ×, R
To End
× → ×, R
0 → 0, R
1 → 1, R
□ → □, L
Cross
off 1
1 → □, L
Back
home
× → ×, L
0 → 0, L
1 → 1, L
□ → □, R
…
0 0 1 1 1 1
…

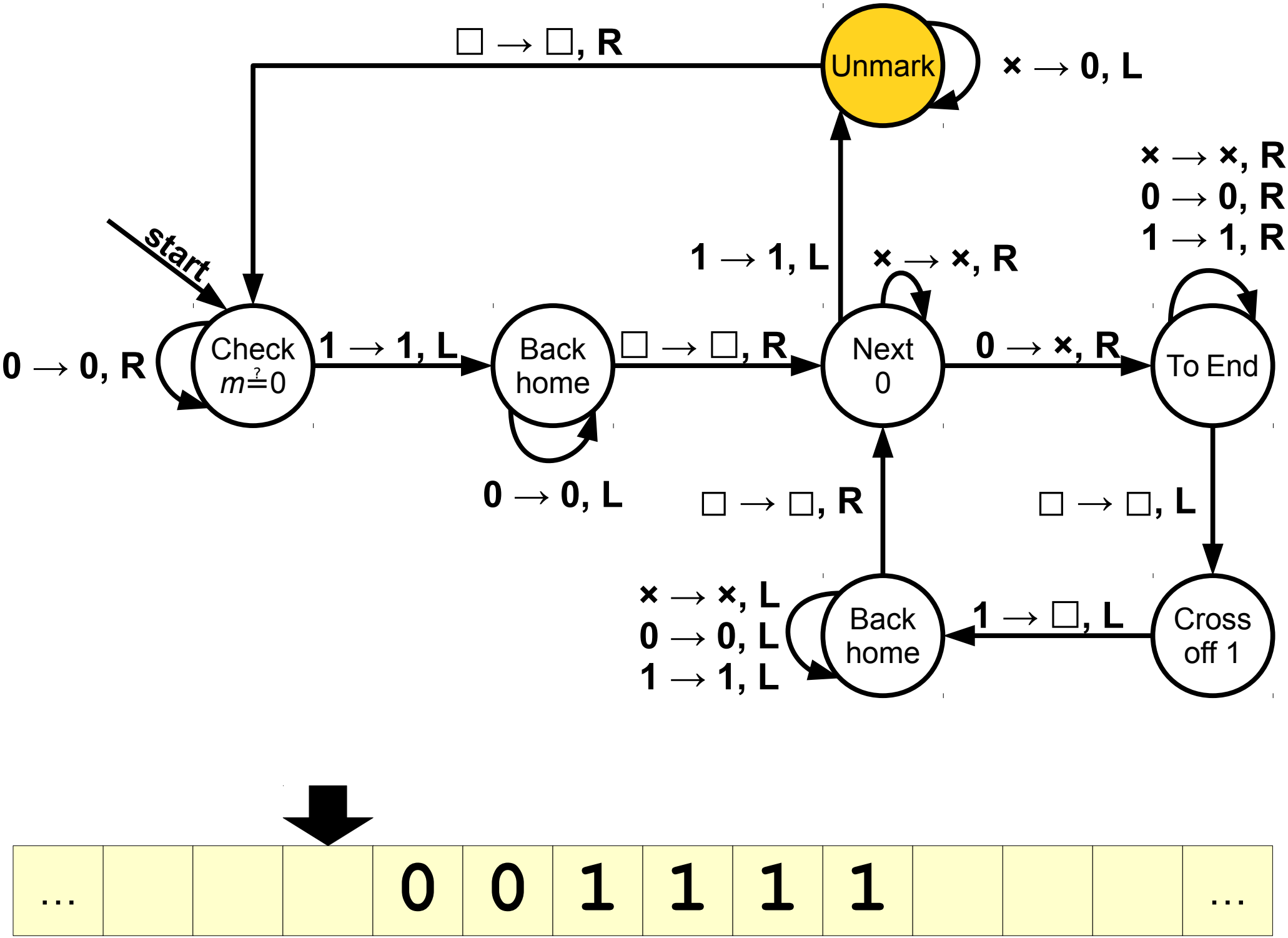
Unmark
□ → □, R
× → 0, L
× → ×, R
0 → 0, R
1 → 1, R
start
1 → 1, L
× → ×, R
Check
m=?0
0 → 0, R
1 → 1, L
Back
home
□ → □, R
Next
0
0 → ×, R
To End
0 → 0, L
□ → □, R
□ → □, L
× → ×, L
0 → 0, L
1 → 1, L
Back
home
1 → □, L
Cross
off 1
...
0 0 1 1 1 1
...

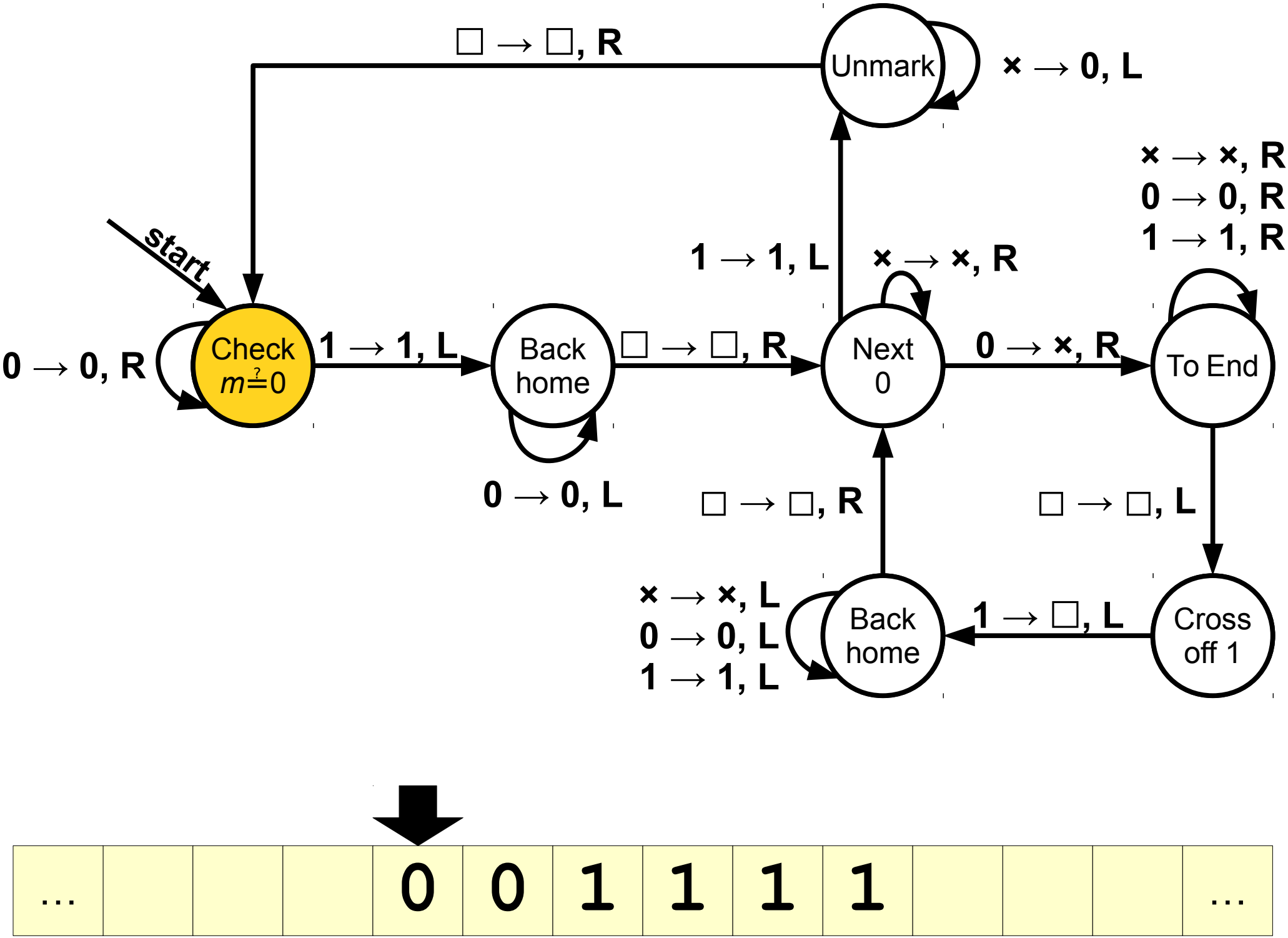
start
Check
m ?= 0
0 → 0, R
1 → 1, L
Back
home
0 → 0, L
□ → □, R
Next
0
1 → 1, L
× → ×, R
0 → ×, R
To End
× → ×, R
0 → 0, R
1 → 1, R
□ → □, L
Cross
off 1
1 → □, L
Back
home
× → ×, L
0 → 0, L
1 → 1, L
□ → □, R
Unmark
× → 0, L
□ → □, R
…
0
0
1
1
1
1
…

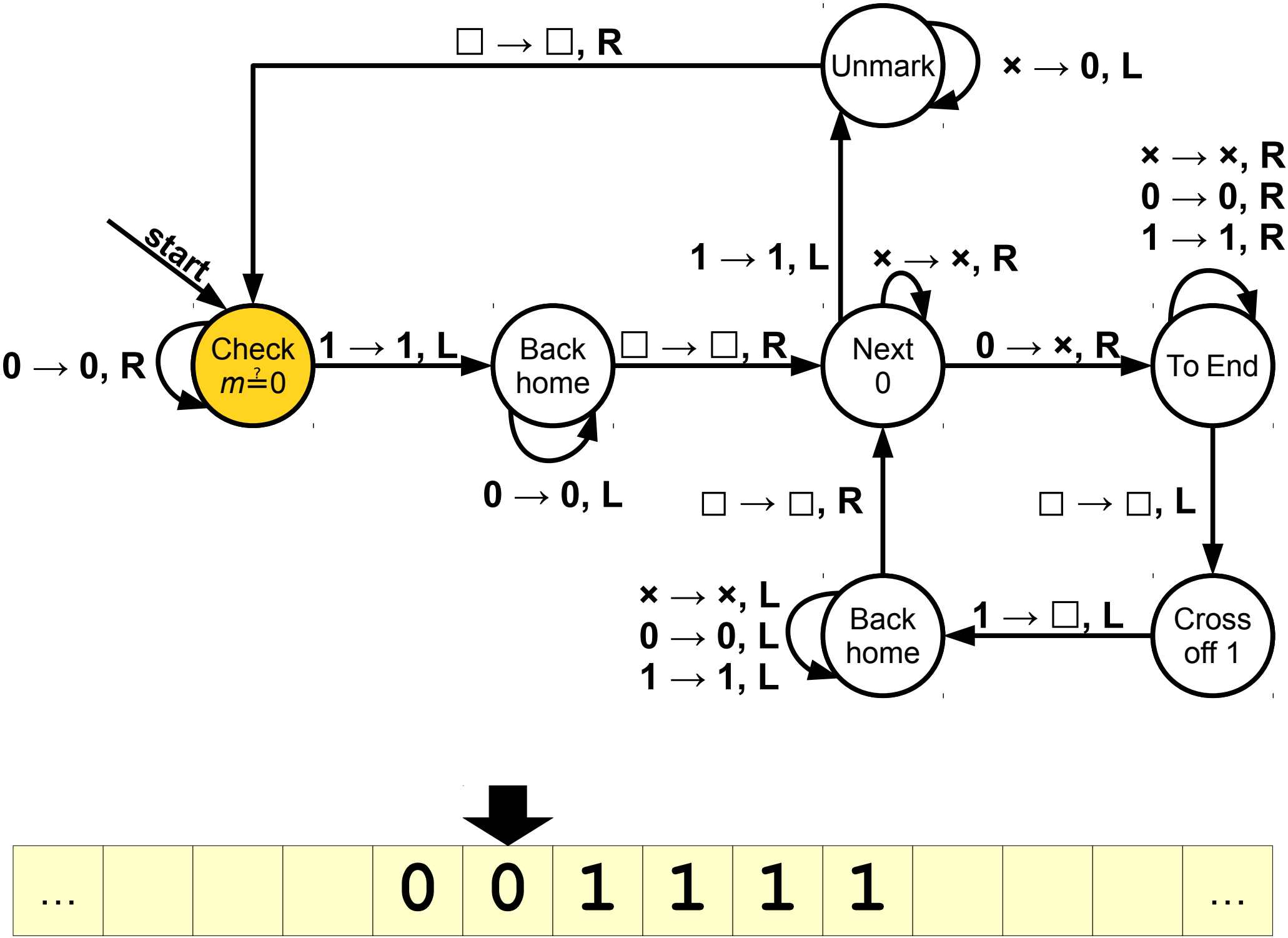
start
Check
m ?= 0
0 → 0, R
1 → 1, L
Back
home
0 → 0, L
□ → □, R
Next
0
1 → 1, L
× → ×, R
0 → ×, R
To End
× → ×, R
0 → 0, R
1 → 1, R
□ → □, L
Cross
off 1
1 → □, L
Back
home
× → ×, L
0 → 0, L
1 → 1, L
□ → □, R
Unmark
× → 0, L
□ → □, R
0 0 1 1 1 1

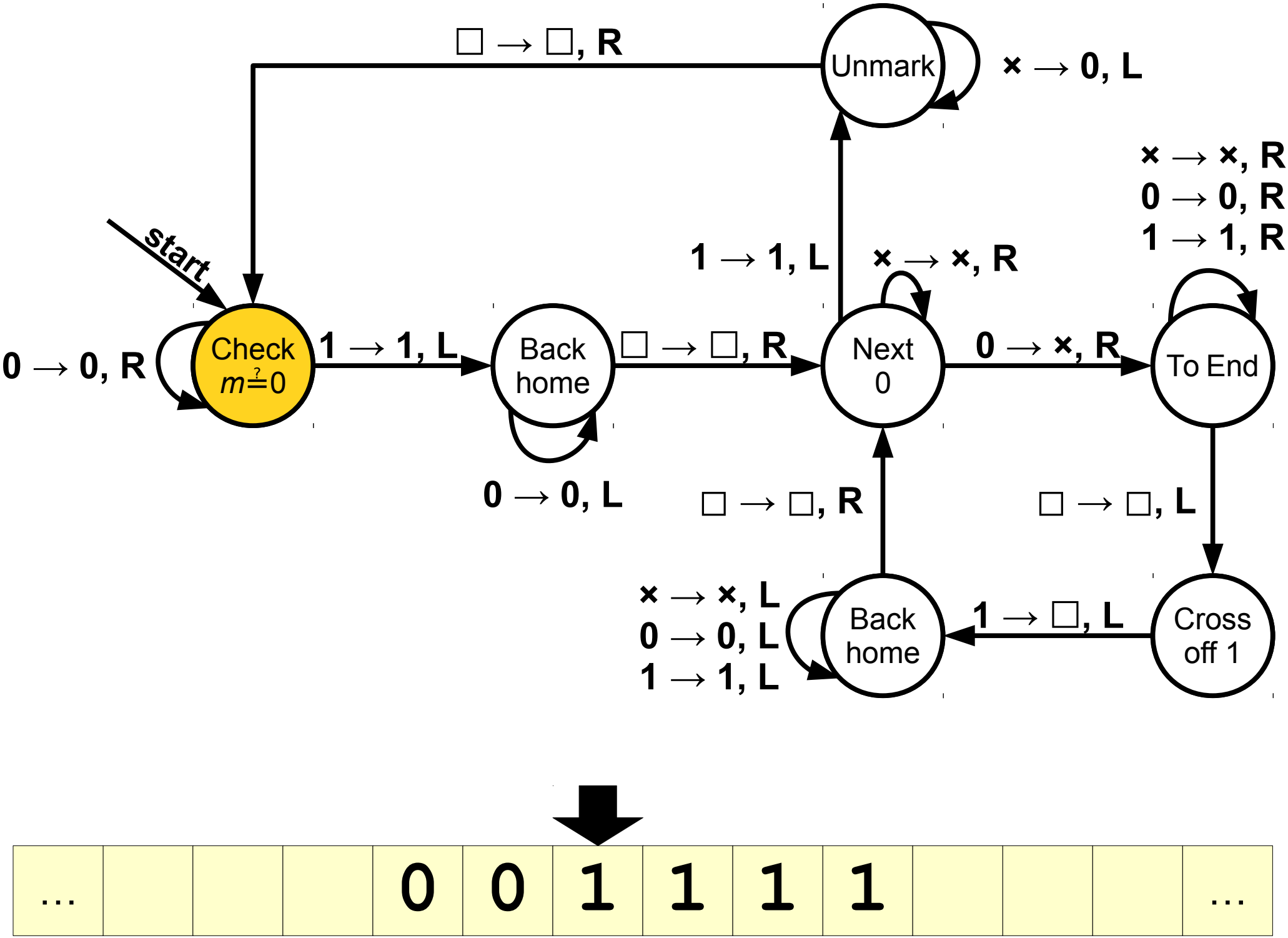
start
Check
m ?= 0
0 → 0, R
1 → 1, L
Back
home
0 → 0, L
□ → □, R
Next
0
1 → 1, L
× → ×, R
0 → ×, R
To End
× → ×, R
0 → 0, R
1 → 1, R
□ → □, L
Cross
off 1
1 → □, L
Back
home
× → ×, L
0 → 0, L
1 → 1, L
□ → □, R
Unmark
× → 0, L
□ → □, R
…
0 0 1 1 1 1
…

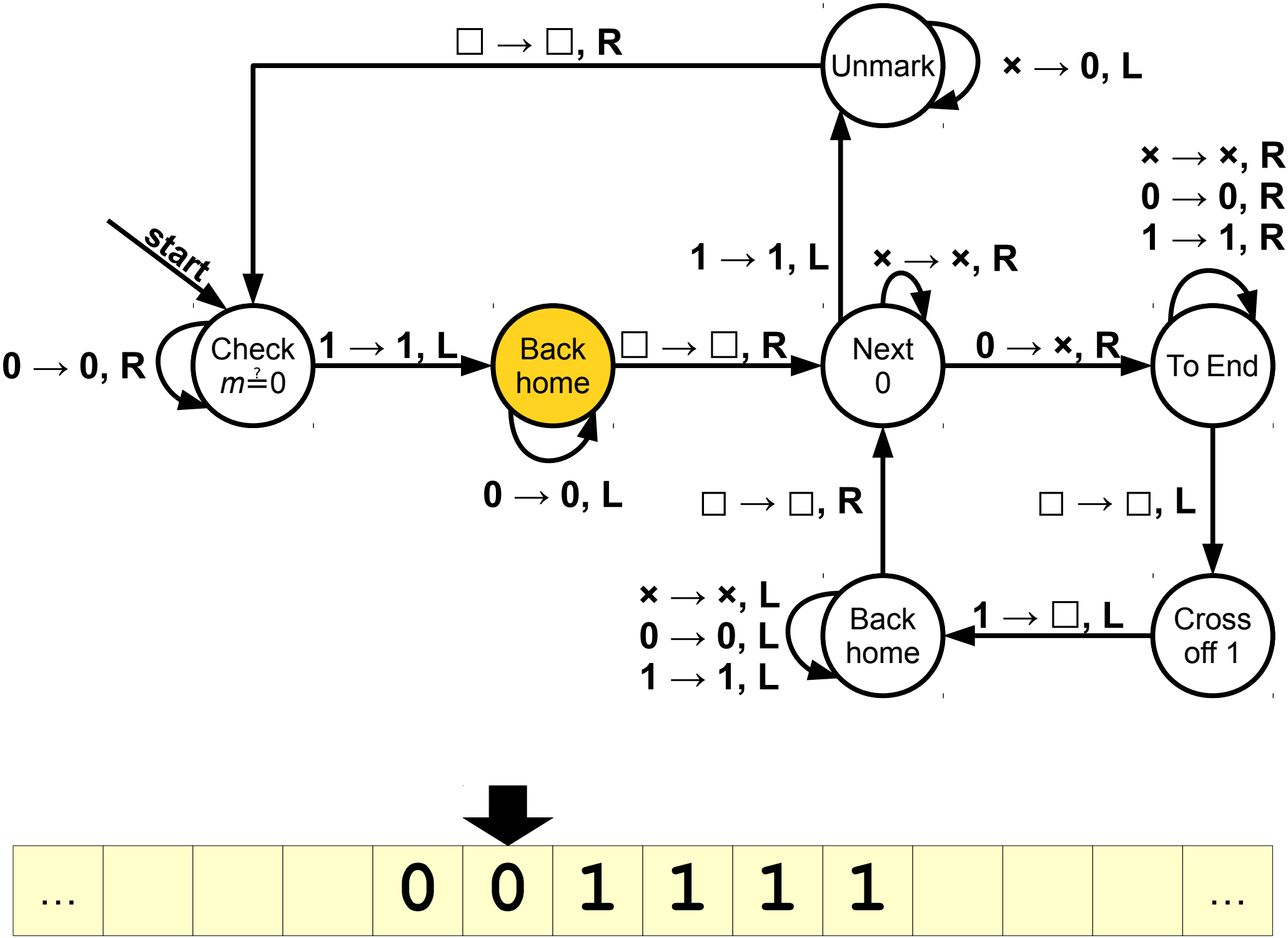
start
Check
m ?= 0
0 → 0, R
1 → 1, L
Back
home
0 → 0, L
□ → □, R
Next
0
1 → 1, L
× → ×, R
0 → ×, R
To End
× → ×, R
0 → 0, R
1 → 1, R
□ → □, L
Cross
off 1
1 → □, L
Back
home
× → ×, L
0 → 0, L
1 → 1, L
□ → □, R
Unmark
× → 0, L
□ → □, R
0 0 1 1 1 1

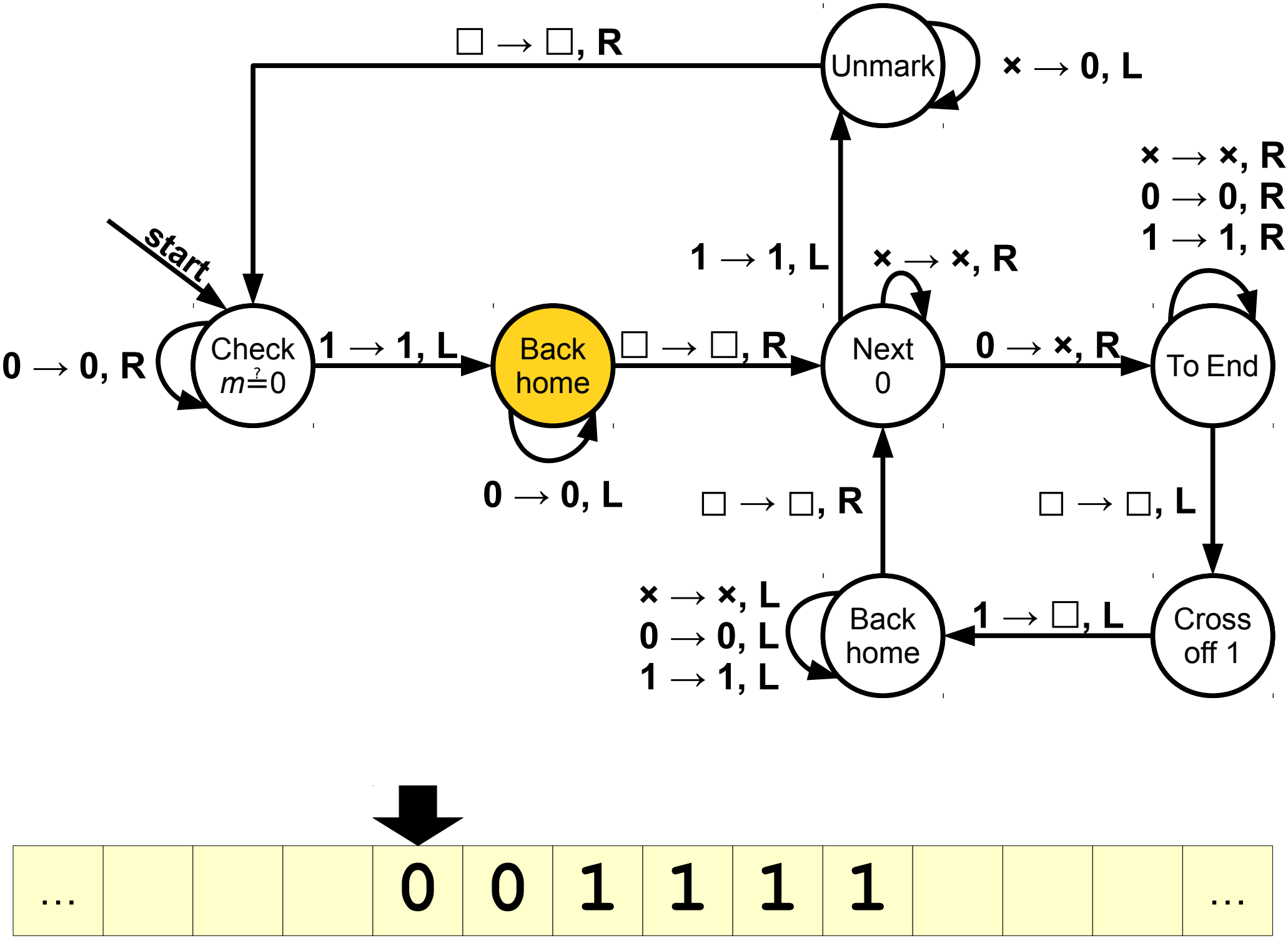
start
Check
m ?= 0
0 → 0, R
1 → 1, L
Back
home
0 → 0, L
□ → □, R
Next
0
1 → 1, L
× → ×, R
0 → ×, R
To End
× → ×, R
0 → 0, R
1 → 1, R
□ → □, L
Cross
off 1
1 → □, L
Back
home
× → ×, L
0 → 0, L
1 → 1, L
□ → □, R
Unmark
× → 0, L
□ → □, R
0 0 1 1 1 1

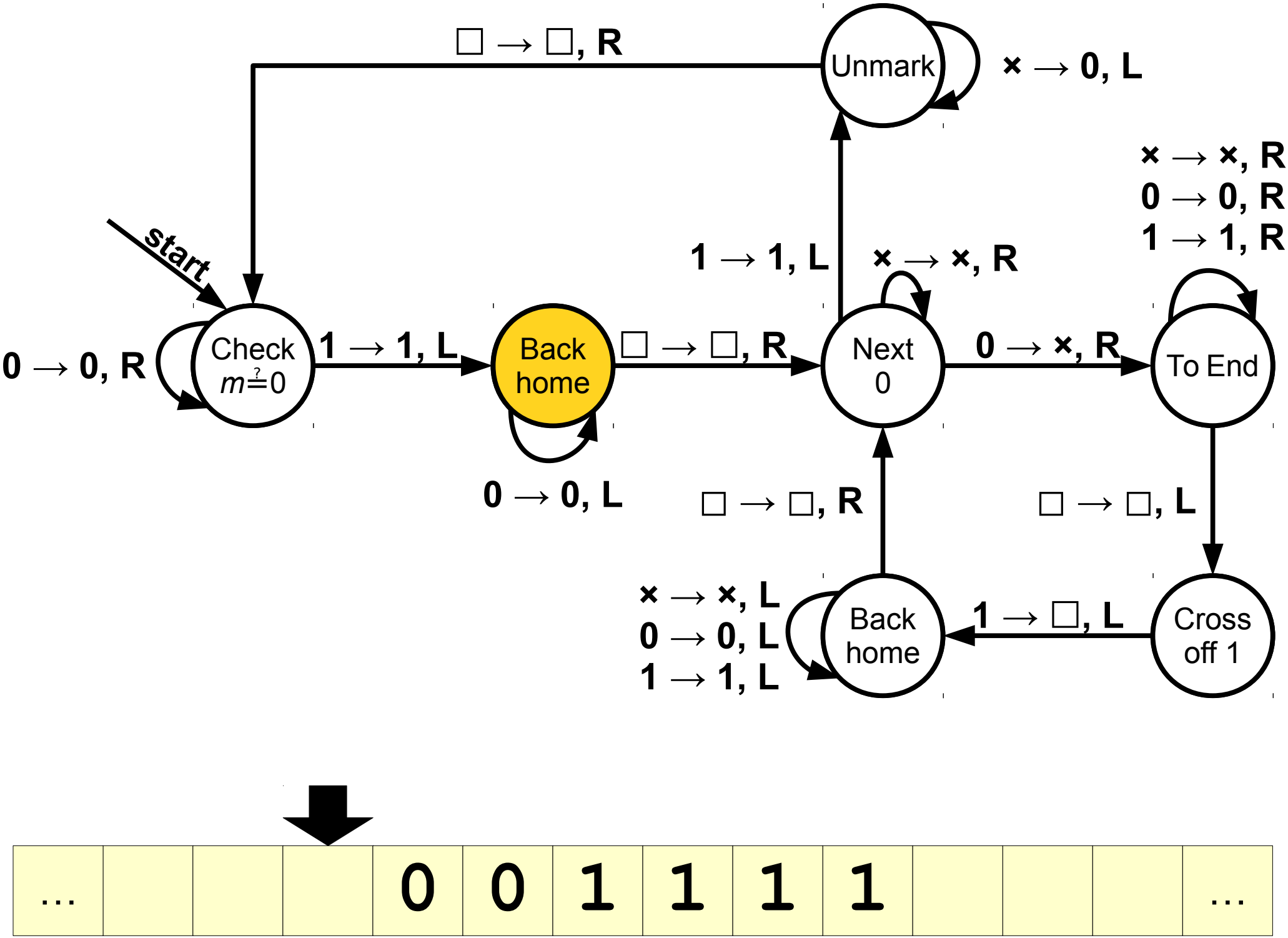
Unmark
□ → □, R
× → 0, L
× → ×, R
0 → 0, R
1 → 1, R
start
1 → 1, L
× → ×, R
Check
m=?0
0 → 0, R
1 → 1, L
Back
home
□ → □, R
Next
0
0 → ×, R
To End
0 → 0, L
□ → □, R
□ → □, L
× → ×, L
0 → 0, L
1 → 1, L
Back
home
1 → □, L
Cross
off 1
…
0 0 1 1 1 1
…

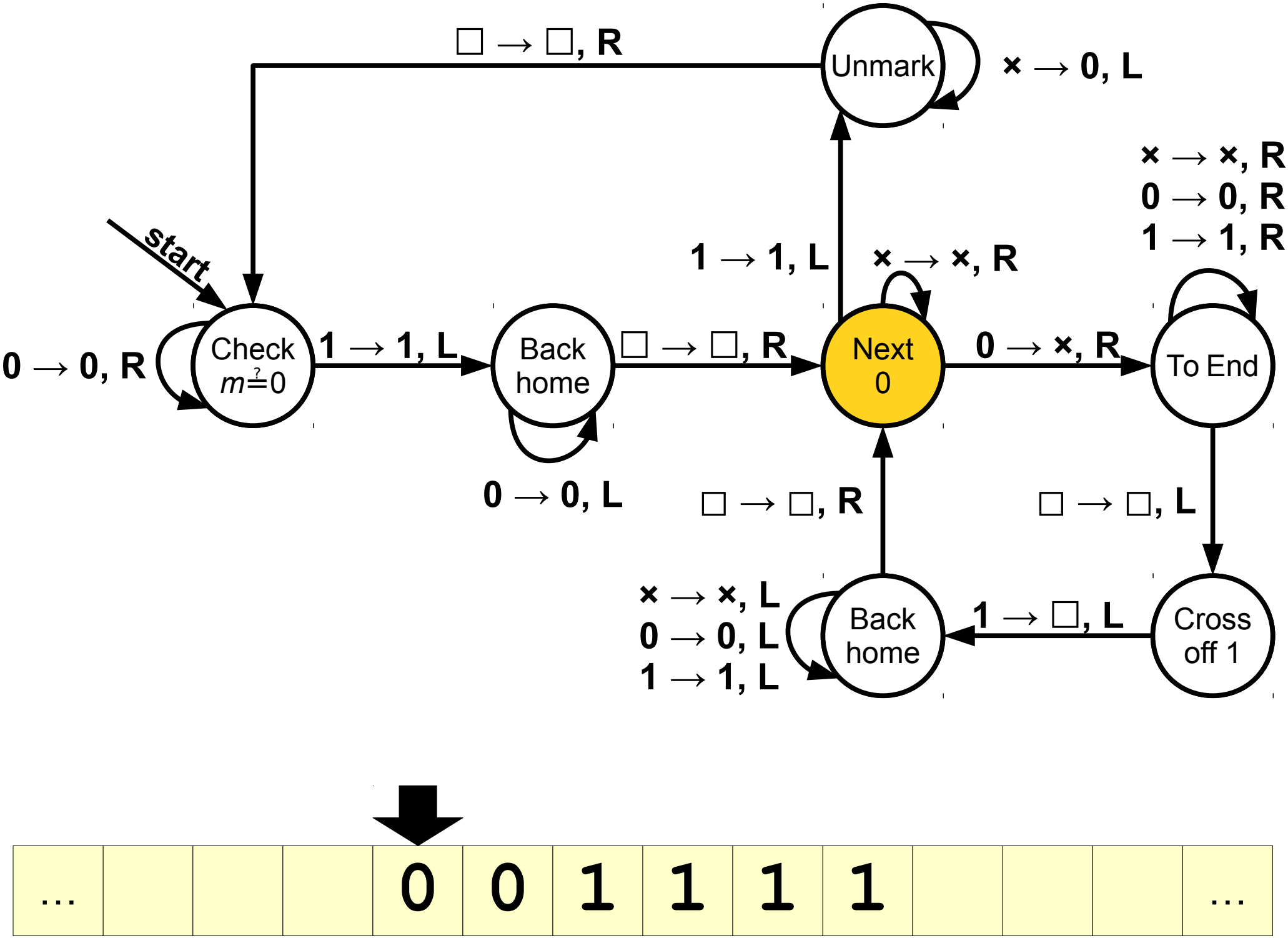
start
Check
m ?= 0
0 → 0, R
1 → 1, L
Back
home
0 → 0, L
□ → □, R
Next
0
1 → 1, L
× → ×, R
0 → ×, R
To End
× → ×, R
0 → 0, R
1 → 1, R
□ → □, L
Cross
off 1
1 → □, L
Back
home
× → ×, L
0 → 0, L
1 → 1, L
□ → □, R
Unmark
× → 0, L
□ → □, R
0 0 1 1 1 1

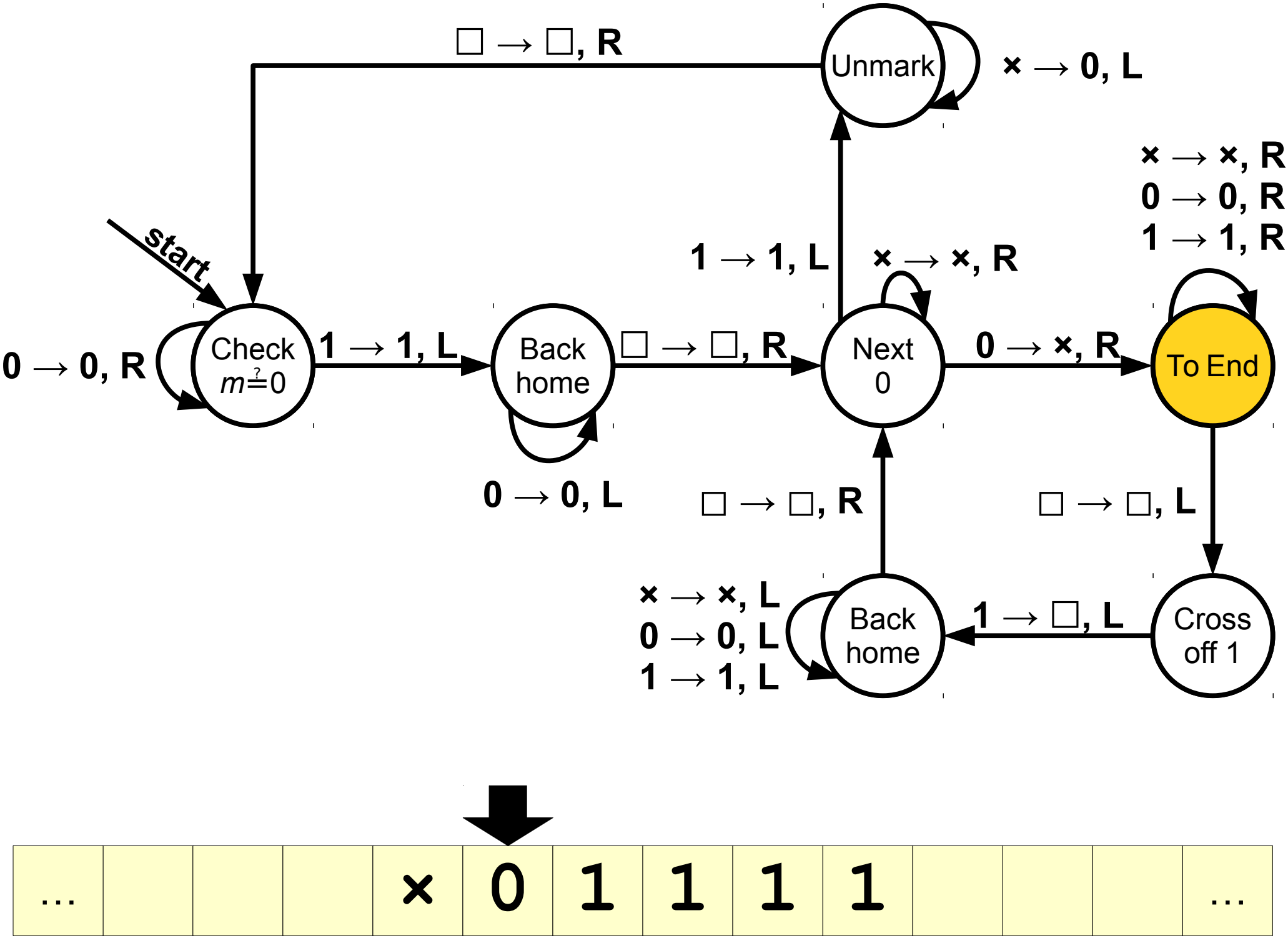
start
Check
m=?0
0 → 0, R
1 → 1, L
Back
home
0 → 0, L
□ → □, R
Next
0
1 → 1, L
× → ×, R
0 → ×, R
Unmark
× → 0, L
□ → □, R
To End
× → ×, R
0 → 0, R
1 → 1, R
□ → □, L
Cross
off 1
1 → □, L
Back
home
× → ×, L
0 → 0, L
1 → 1, L
□ → □, R
...
×
0
1
1
1
1
...

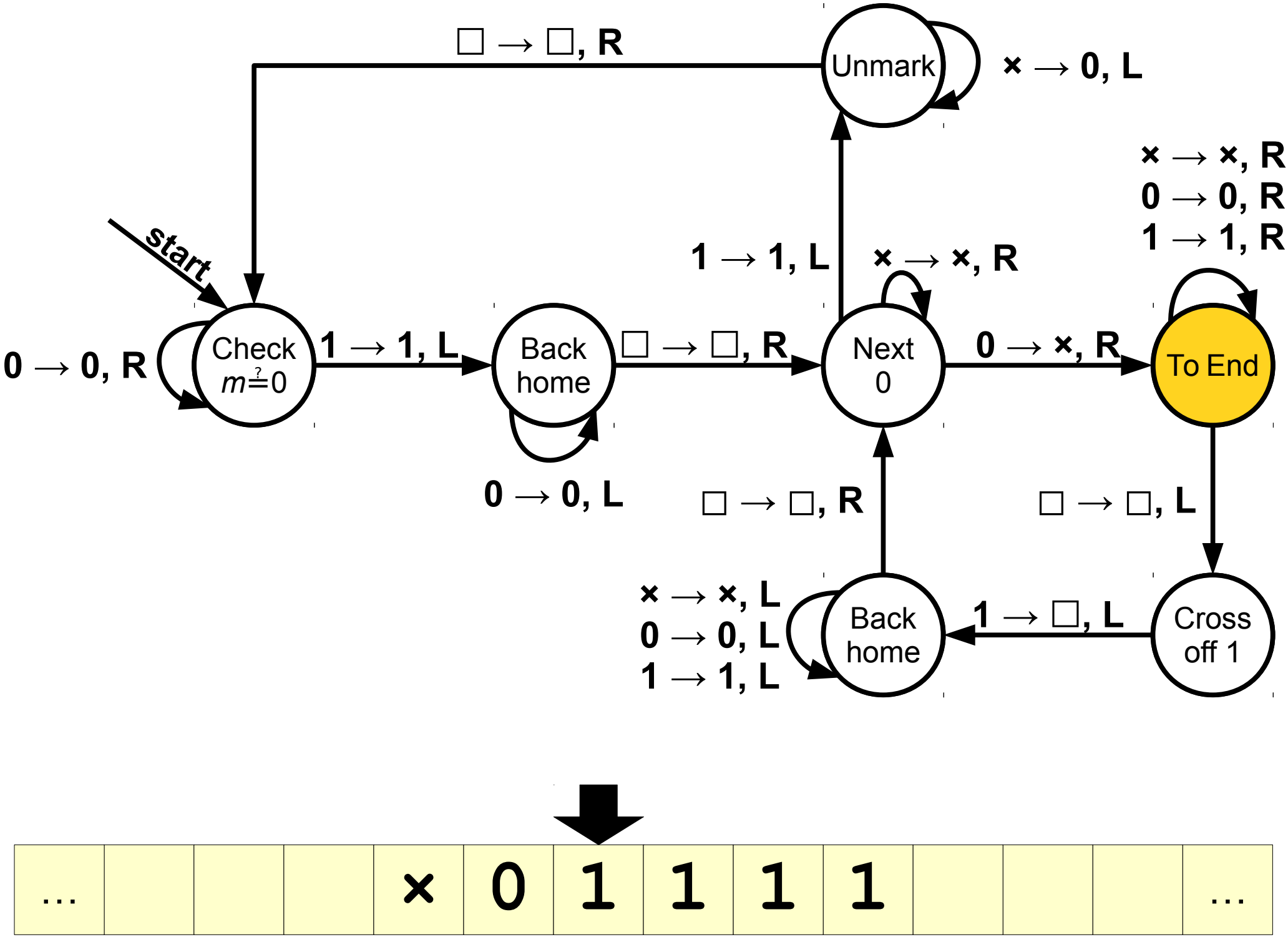
start
Check
m ?= 0
0 → 0, R
1 → 1, L
Back
home
0 → 0, L
□ → □, R
Next
0
1 → 1, L
× → ×, R
0 → ×, R
To End
× → ×, R
0 → 0, R
1 → 1, R
□ → □, L
Cross
off 1
1 → □, L
Back
home
× → ×, L
0 → 0, L
1 → 1, L
□ → □, R
Unmark
× → 0, L
□ → □, R
...
×
0
1
1
1
1
...

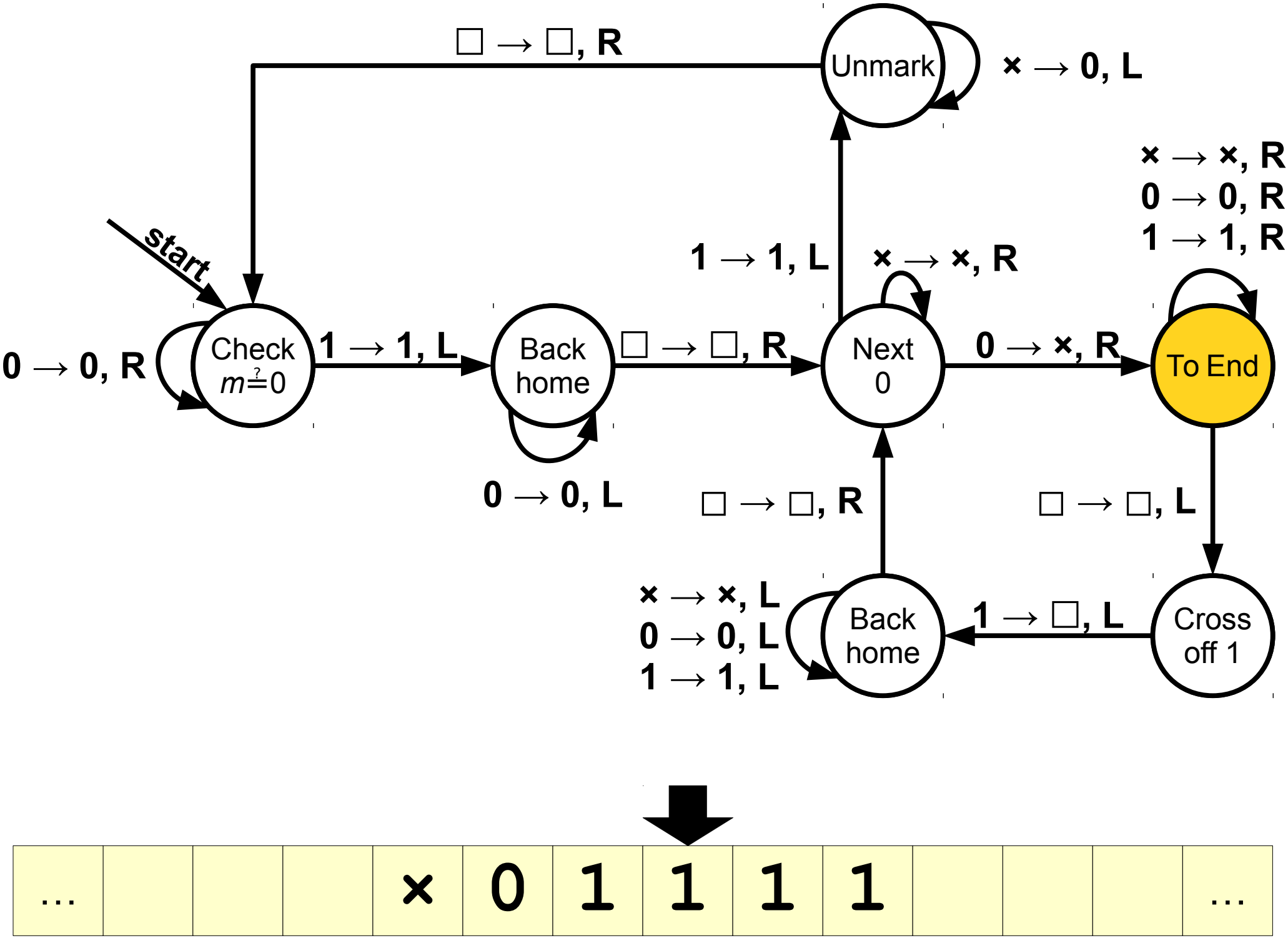
start
Check
m ?= 0
0 → 0, R
1 → 1, L
Back
home
0 → 0, L
□ → □, R
Next
0
1 → 1, L
× → ×, R
0 → ×, R
To End
× → ×, R
0 → 0, R
1 → 1, R
□ → □, L
Cross
off 1
1 → □, L
Back
home
× → ×, L
0 → 0, L
1 → 1, L
□ → □, R
Unmark
× → 0, L
□ → □, R
…
×
0
1
1
1
1
…

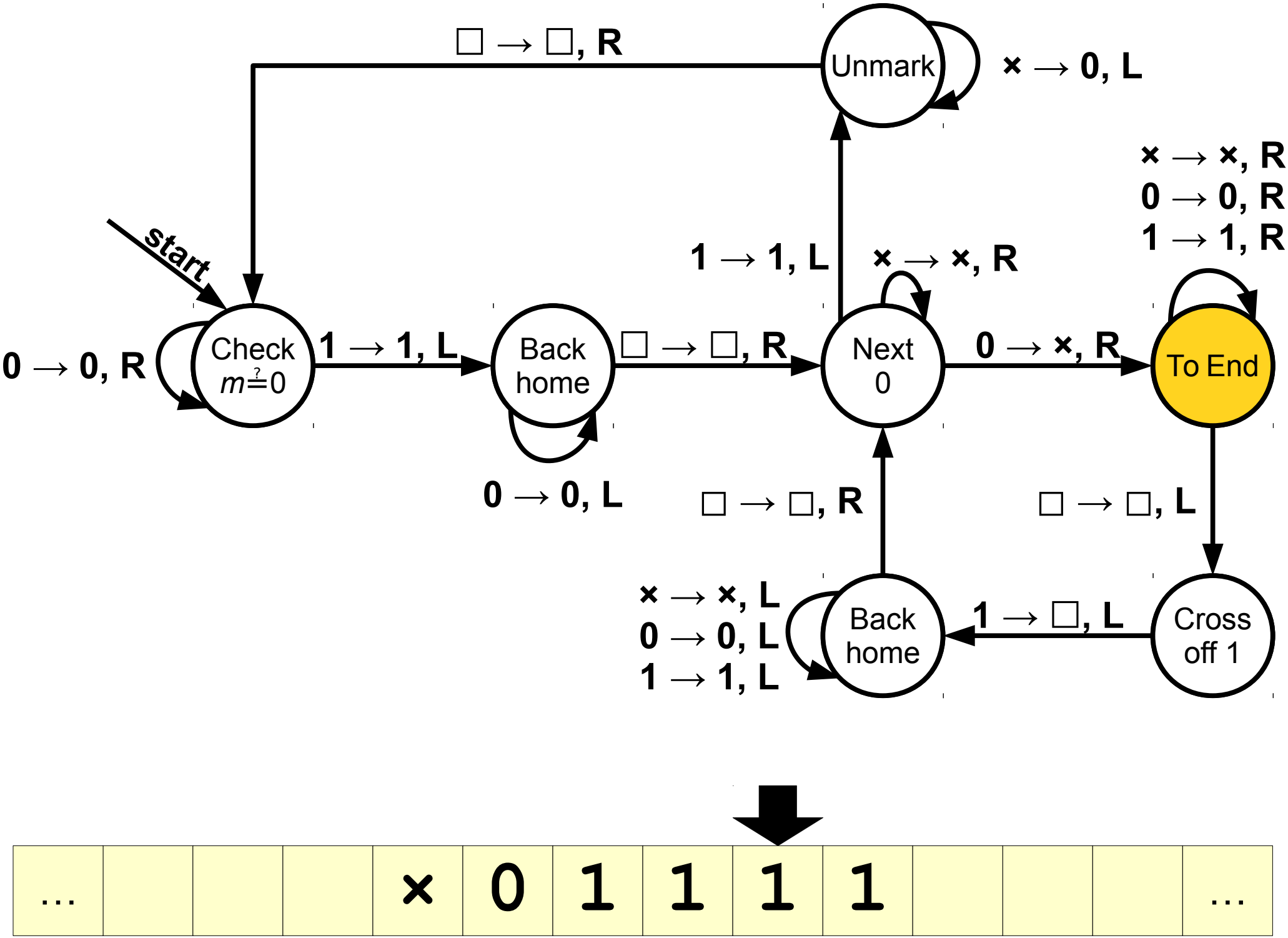
start
Check
m ?= 0
0 → 0, R
1 → 1, L
Back
home
0 → 0, L
□ → □, R
Next
0
1 → 1, L
× → ×, R
0 → ×, R
To End
× → ×, R
0 → 0, R
1 → 1, R
□ → □, L
Cross
off 1
1 → □, L
Back
home
× → ×, L
0 → 0, L
1 → 1, L
□ → □, R
Unmark
× → 0, L
□ → □, R
…
×
0
1
1
1
1
…

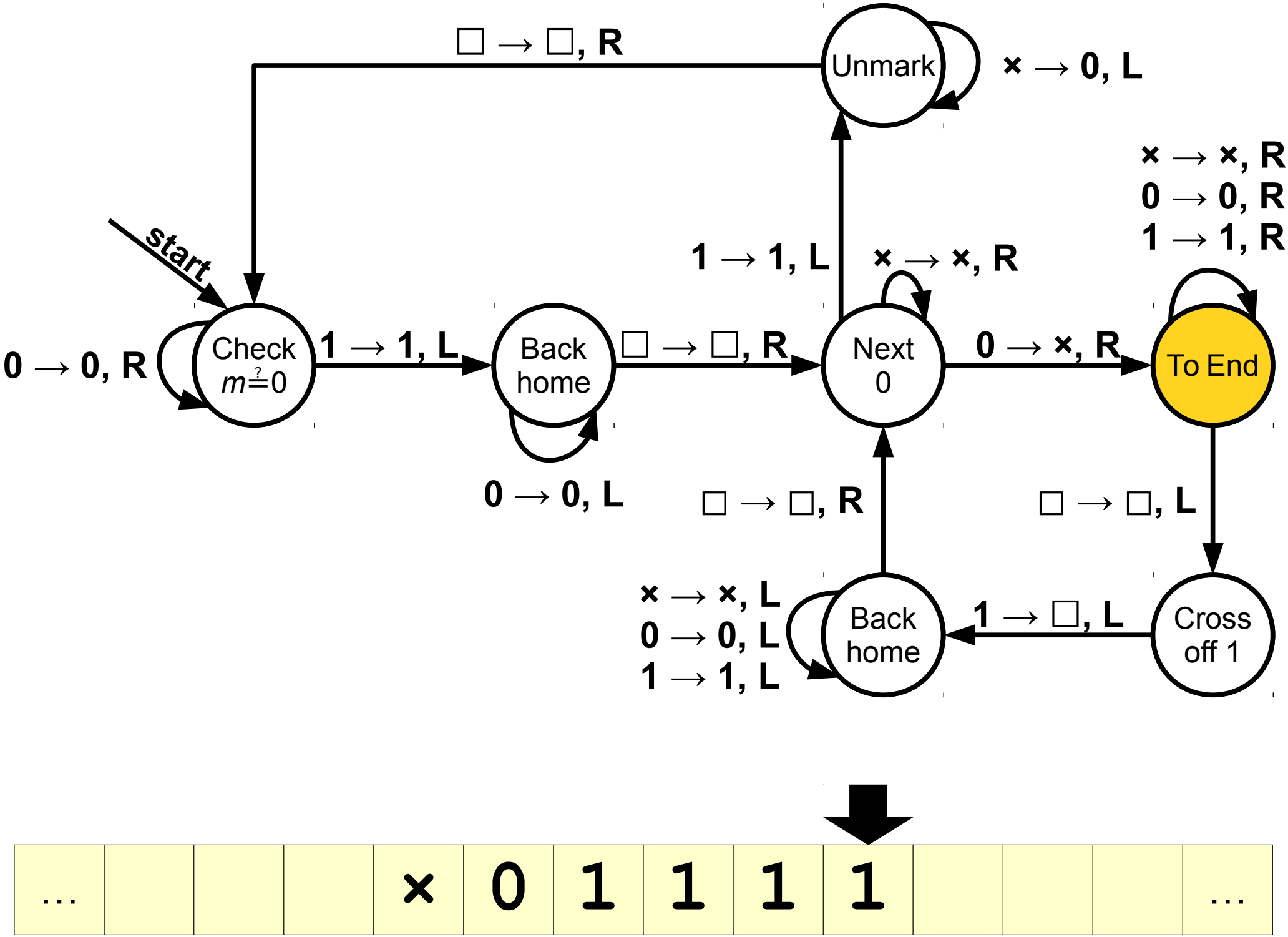
start
Check
m ?= 0
0 → 0, R
1 → 1, L
Back
home
0 → 0, L
□ → □, R
Next
0
1 → 1, L
× → ×, R
0 → ×, R
Unmark
× → 0, L
□ → □, R
To End
× → ×, R
0 → 0, R
1 → 1, R
□ → □, L
Cross
off 1
1 → □, L
Back
home
× → ×, L
0 → 0, L
1 → 1, L
□ → □, R
… × 0 1 1 1 1 …

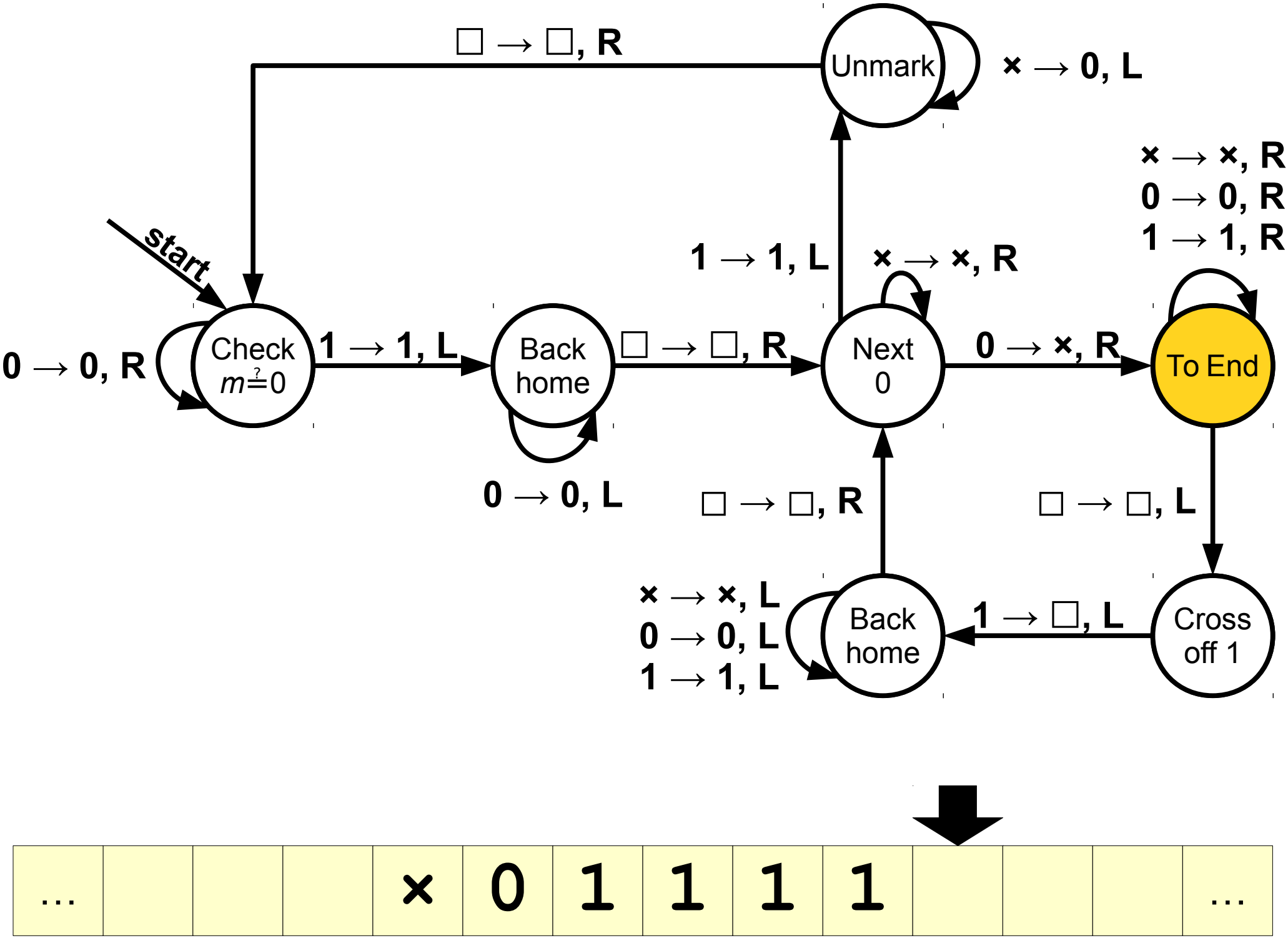
start
Check
m=?0
0 → 0, R
1 → 1, L
Back
home
0 → 0, L
□ → □, R
Next
0
1 → 1, L
× → ×, R
0 → ×, R
Unmark
× → 0, L
□ → □, R
To End
× → ×, R
0 → 0, R
1 → 1, R
□ → □, L
Cross
off 1
1 → □, L
Back
home
× → ×, L
0 → 0, L
1 → 1, L
□ → □, R
…
×
0
1
1
1
1
…

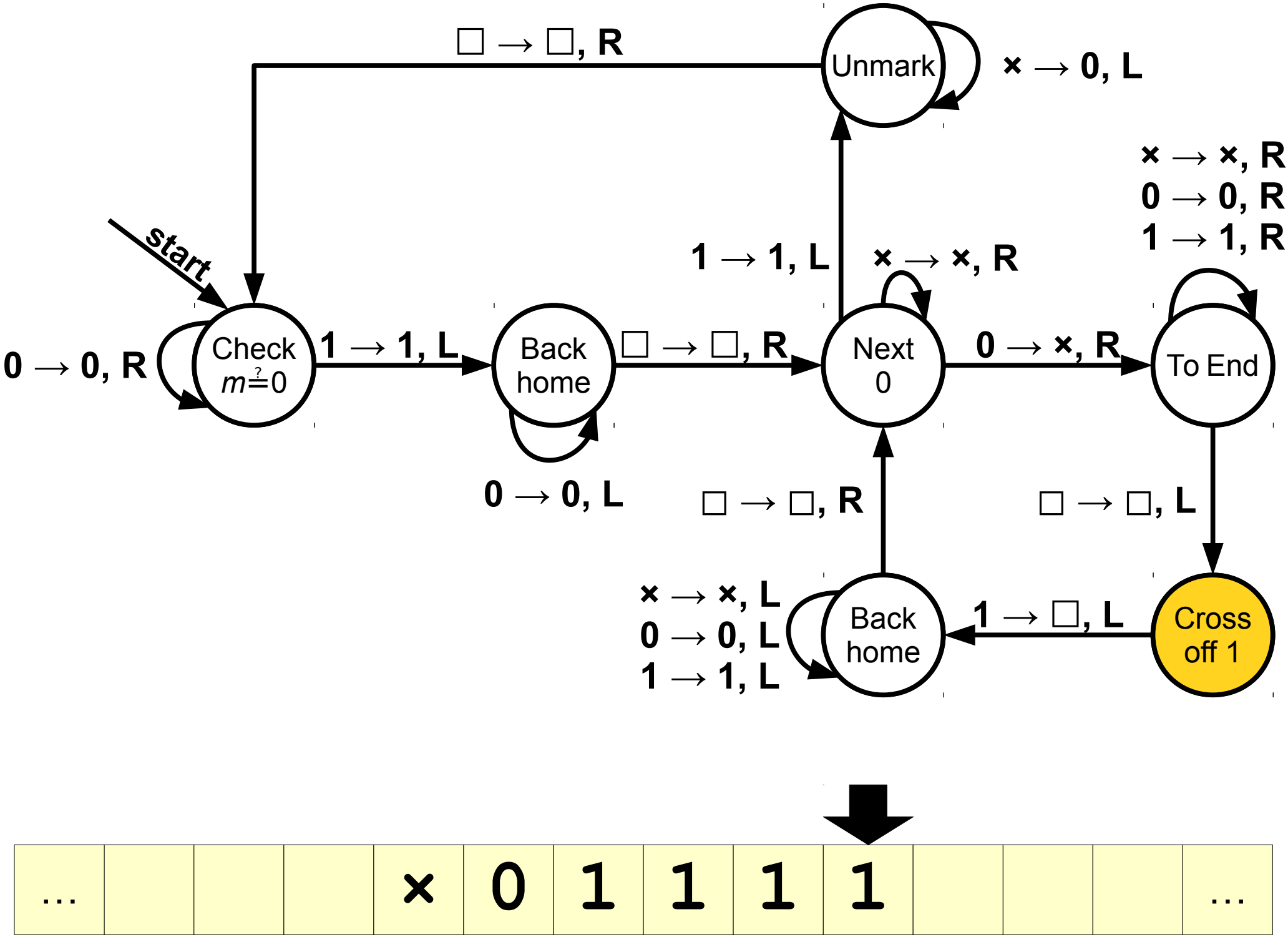
start
Check
m ?= 0
0 → 0, R
1 → 1, L
Back
home
0 → 0, L
□ → □, R
Next
0
1 → 1, L
× → ×, R
0 → ×, R
Unmark
× → 0, L
□ → □, R
To End
× → ×, R
0 → 0, R
1 → 1, R
□ → □, L
Cross
off 1
1 → □, L
Back
home
× → ×, L
0 → 0, L
1 → 1, L
□ → □, R
…
×
0
1
1
1
1
…

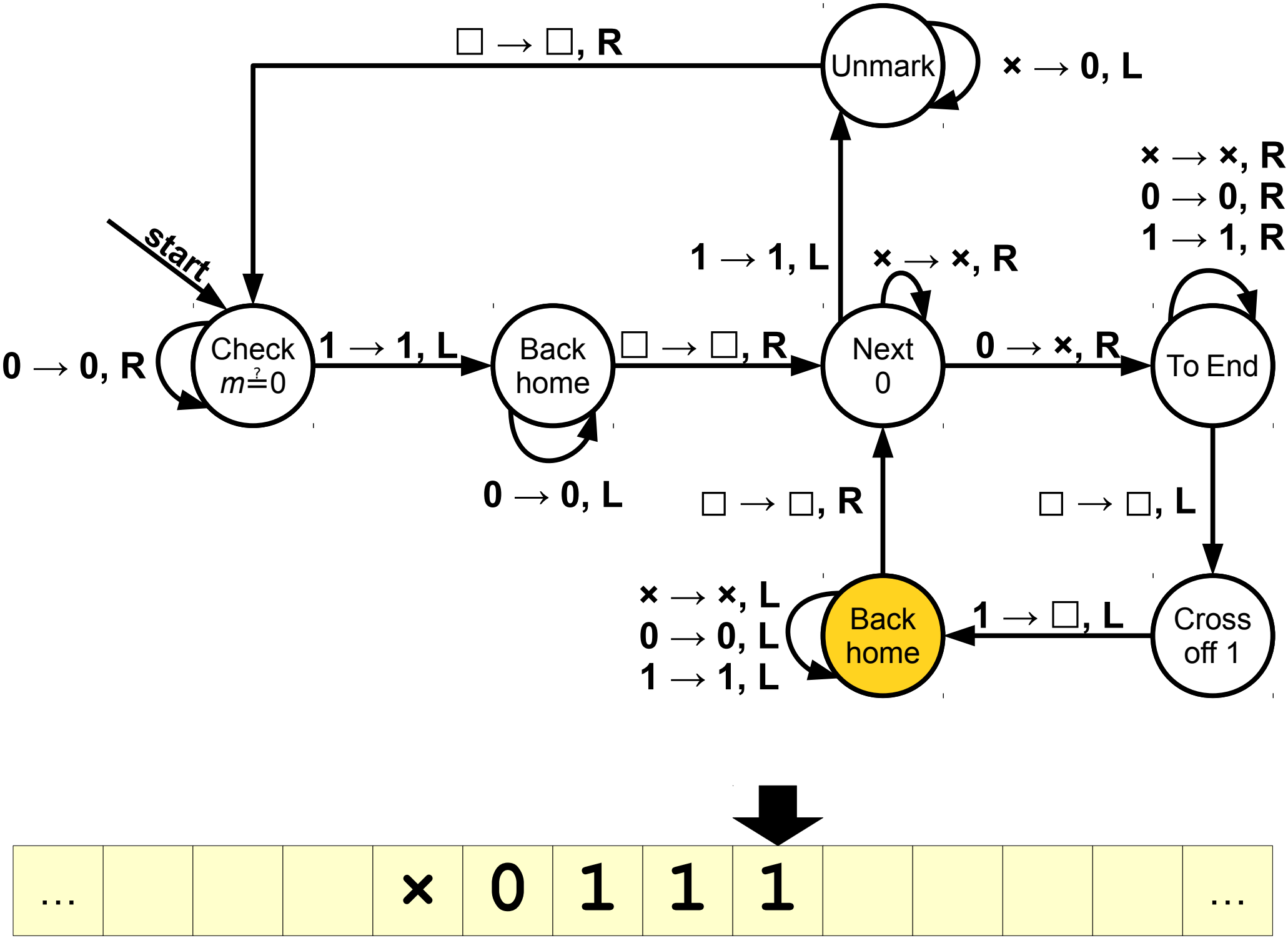
start
Check
m ?= 0
0 → 0, R
1 → 1, L
Back
home
0 → 0, L
□ → □, R
Next
0
1 → 1, L
× → ×, R
0 → ×, R
To End
× → ×, R
0 → 0, R
1 → 1, R
□ → □, L
Cross
off 1
1 → □, L
Back
home
× → ×, L
0 → 0, L
1 → 1, L
□ → □, R
Unmark
× → 0, L
□ → □, R
…
×
0
1
1
1
…

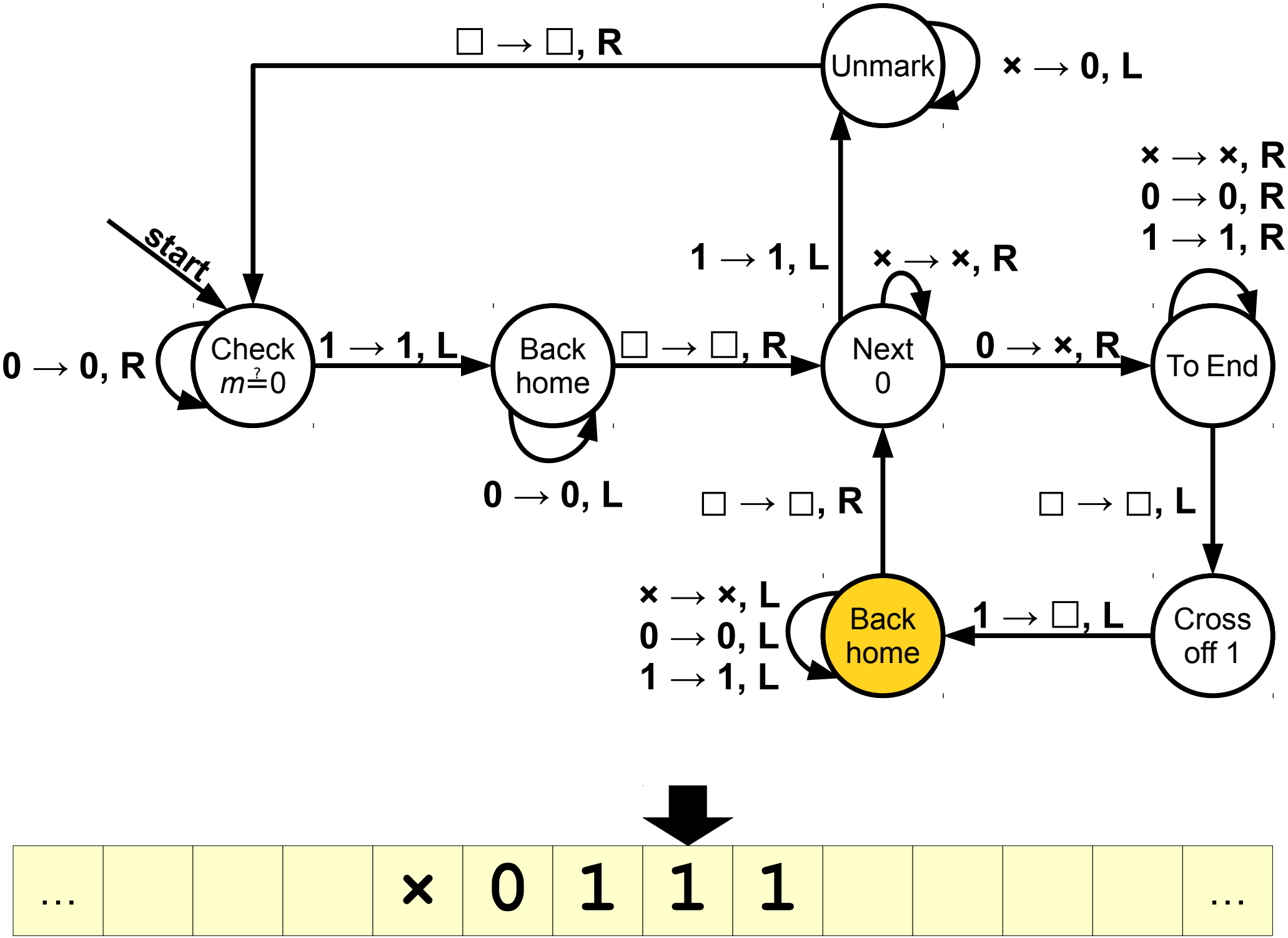
start
Check
m ?= 0
0 → 0, R
1 → 1, L
Back
home
0 → 0, L
□ → □, R
Next
0
1 → 1, L
× → ×, R
0 → ×, R
Unmark
× → 0, L
□ → □, R
To End
× → ×, R
0 → 0, R
1 → 1, R
□ → □, L
Cross
off 1
1 → □, L
Back
home
× → ×, L
0 → 0, L
1 → 1, L
□ → □, R
…
×
0
1
1
1
…

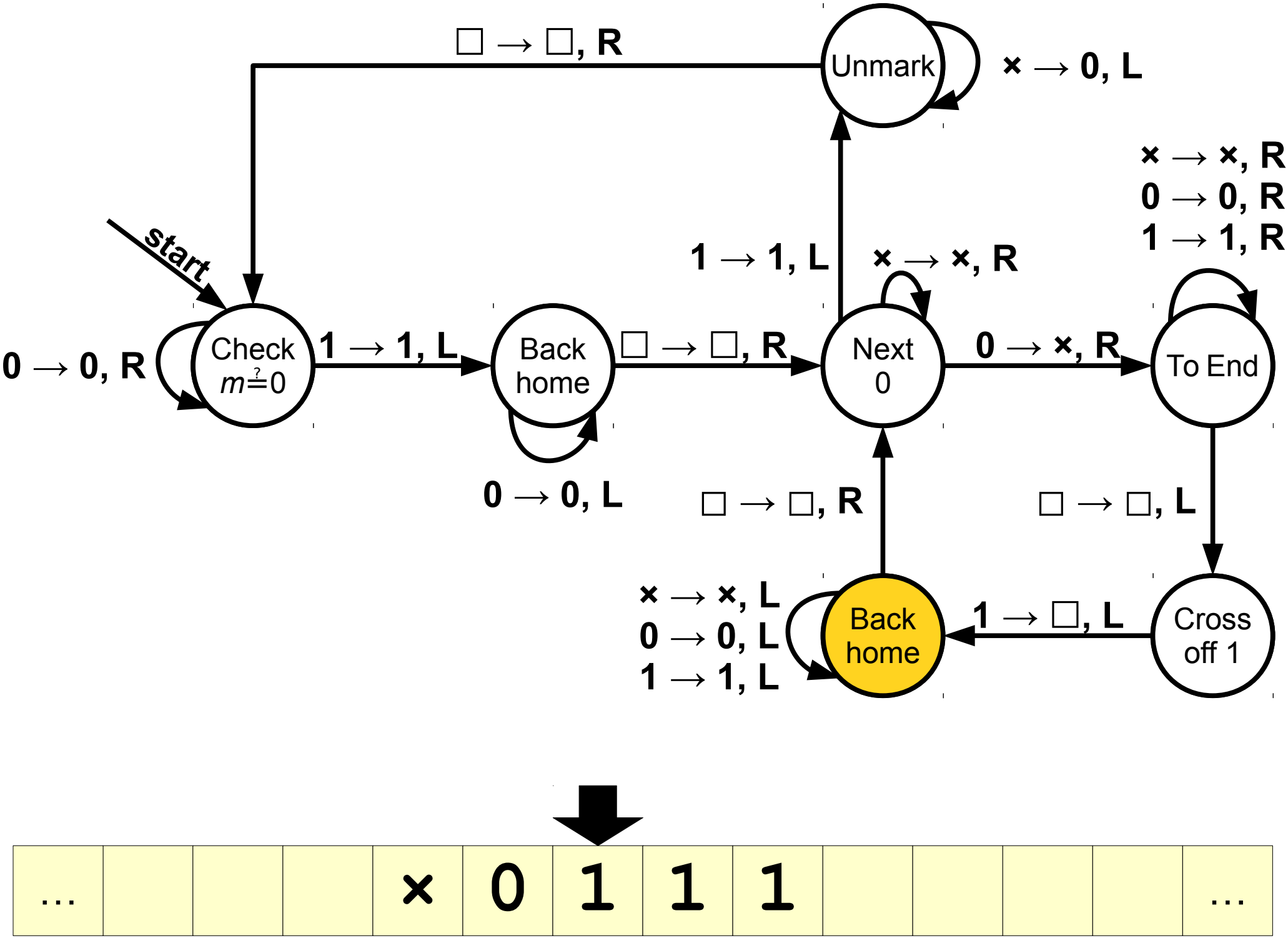
start
Check
m ?= 0
0 → 0, R
1 → 1, L
Back
home
0 → 0, L
□ → □, R
Next
0
1 → 1, L
× → ×, R
0 → ×, R
Unmark
× → 0, L
□ → □, R
To End
× → ×, R
0 → 0, R
1 → 1, R
□ → □, L
Cross
off 1
1 → □, L
Back
home
□ → □, R
× → ×, L
0 → 0, L
1 → 1, L
…
×
0
1
1
1
…

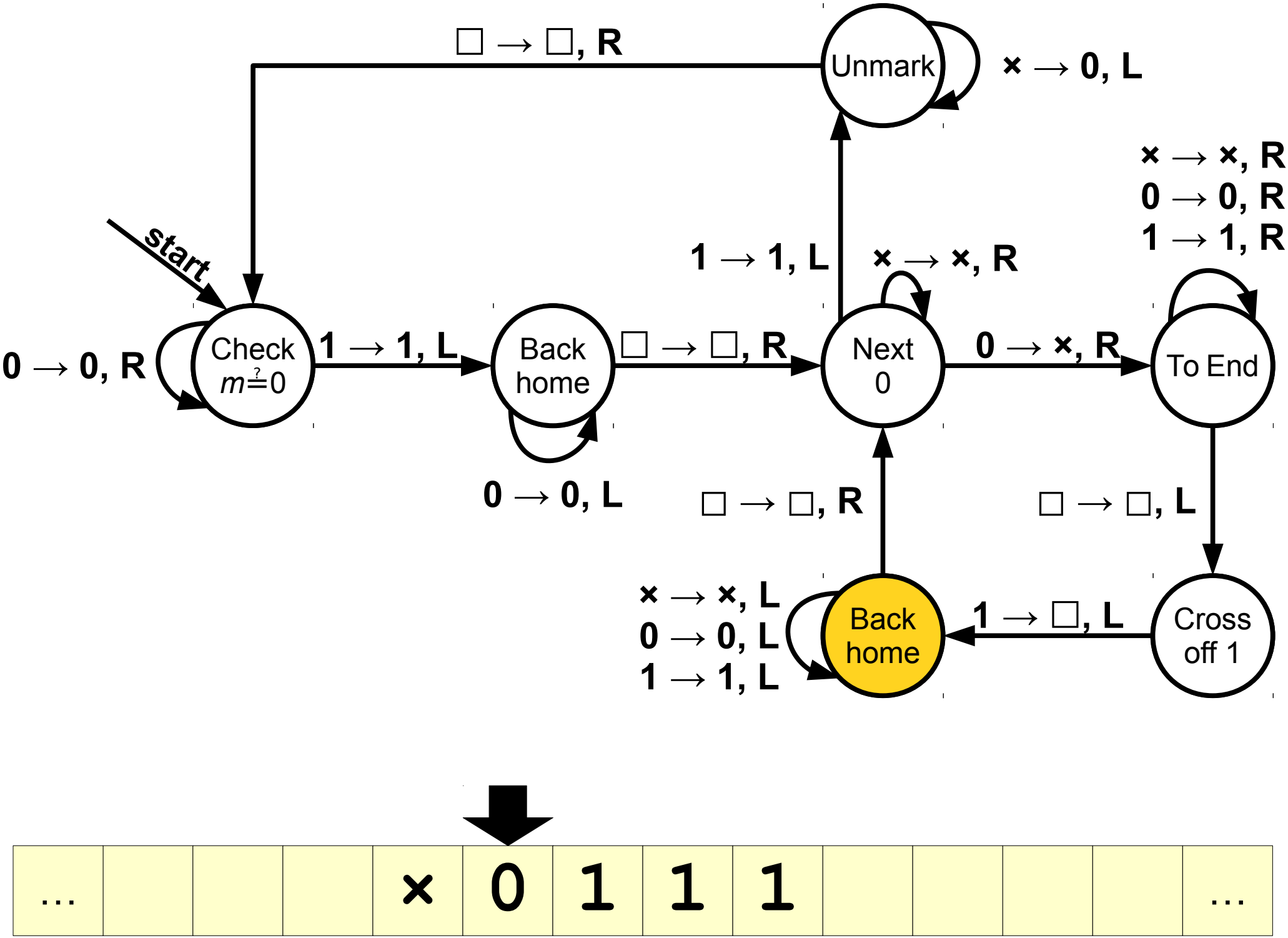
start
Check
m=?0
0 → 0, R
1 → 1, L
Back
home
0 → 0, L
□ → □, R
Next
0
1 → 1, L
× → ×, R
0 → ×, R
Unmark
× → 0, L
□ → □, R
To End
× → ×, R
0 → 0, R
1 → 1, R
□ → □, L
Cross
off 1
1 → □, L
Back
home
× → ×, L
0 → 0, L
1 → 1, L
□ → □, R
…
×
0
1
1
1
…

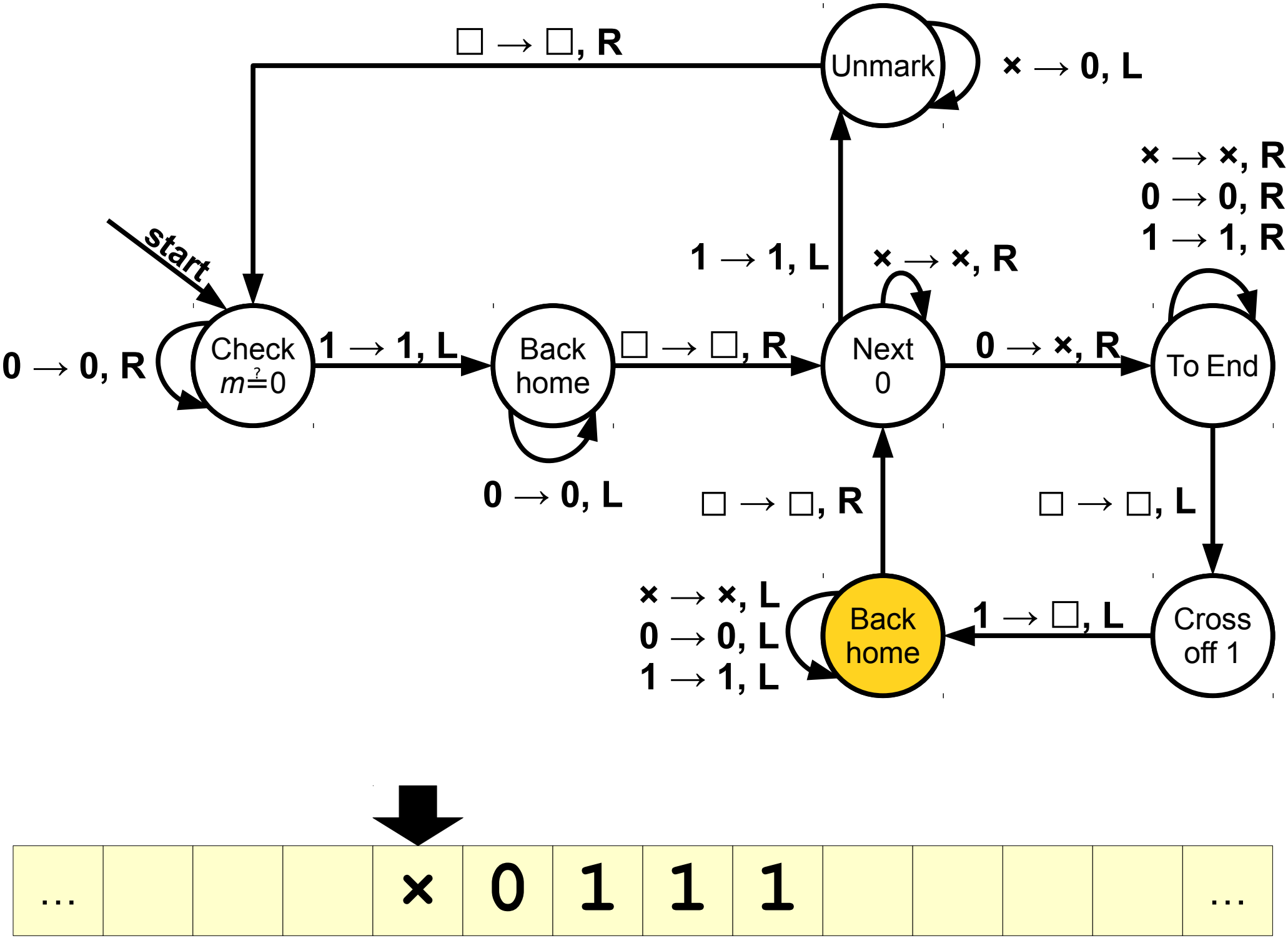
start
Check
m=0
0 → 0, R
1 → 1, L
Back
home
0 → 0, L
□ → □, R
Next
0
1 → 1, L
× → ×, R
0 → ×, R
Unmark
□ → □, R
× → 0, L
To End
× → ×, R
0 → 0, R
1 → 1, R
□ → □, L
Cross
off 1
1 → □, L
Back
home
× → ×, L
0 → 0, L
1 → 1, L
□ → □, R
...
×
0
1
1
1
...

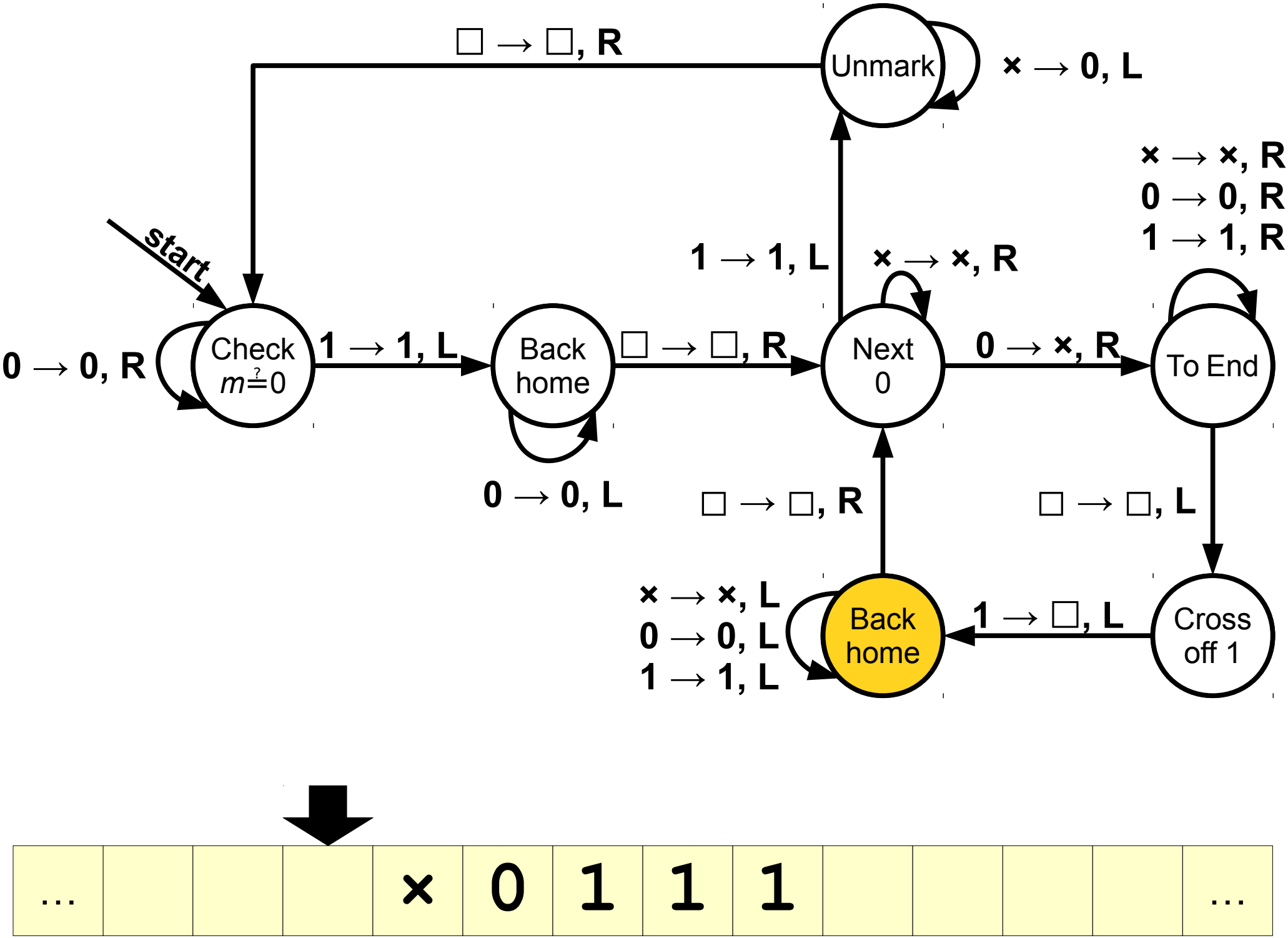
start
Check
m ?= 0
0 → 0, R
1 → 1, L
Back
home
0 → 0, L
□ → □, R
Next
0
1 → 1, L
× → ×, R
0 → ×, R
To End
× → ×, R
0 → 0, R
1 → 1, R
□ → □, L
Cross
off 1
1 → □, L
Back
home
× → ×, L
0 → 0, L
1 → 1, L
□ → □, R
Unmark
× → 0, L
□ → □, R
…
×
0
1
1
1
…

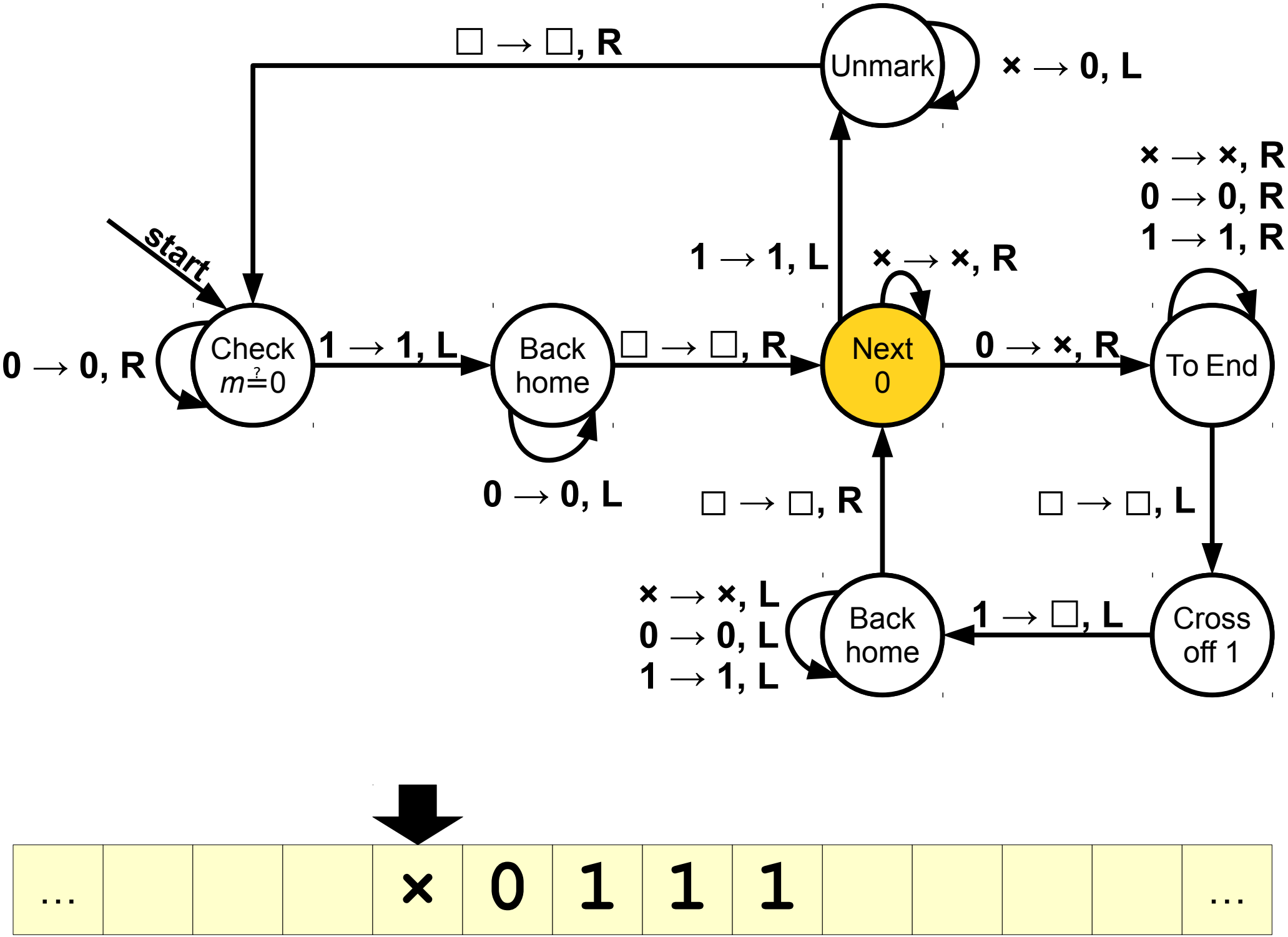
Unmark
□ → □, R
× → 0, L
× → ×, R
0 → 0, R
1 → 1, R
start
1 → 1, L
× → ×, R
Check
m=?0
0 → 0, R
1 → 1, L
Back
home
□ → □, R
Next
0
0 → ×, R
To End
0 → 0, L
□ → □, R
□ → □, L
× → ×, L
0 → 0, L
1 → 1, L
Back
home
1 → □, L
Cross
off 1
…
×
0
1
1
1
…

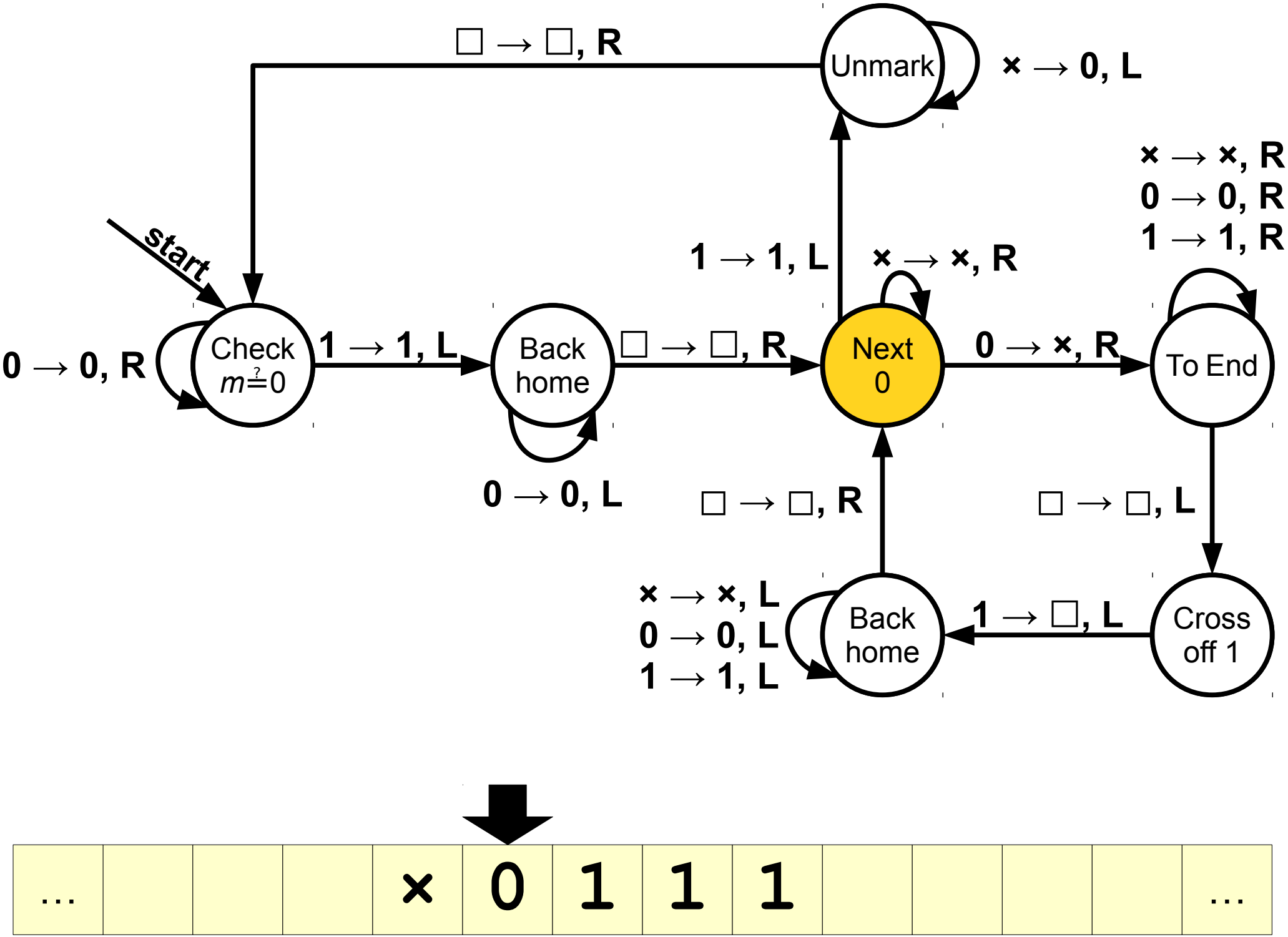
start
Check
m=?0
0 → 0, R
1 → 1, L
Back
home
0 → 0, L
□ → □, R
Next
0
1 → 1, L
× → ×, R
0 → ×, R
Unmark
□ → □, R
× → 0, L
To End
× → ×, R
0 → 0, R
1 → 1, R
□ → □, L
Cross
off 1
1 → □, L
Back
home
× → ×, L
0 → 0, L
1 → 1, L
□ → □, R
...
×
0
1
1
1
...

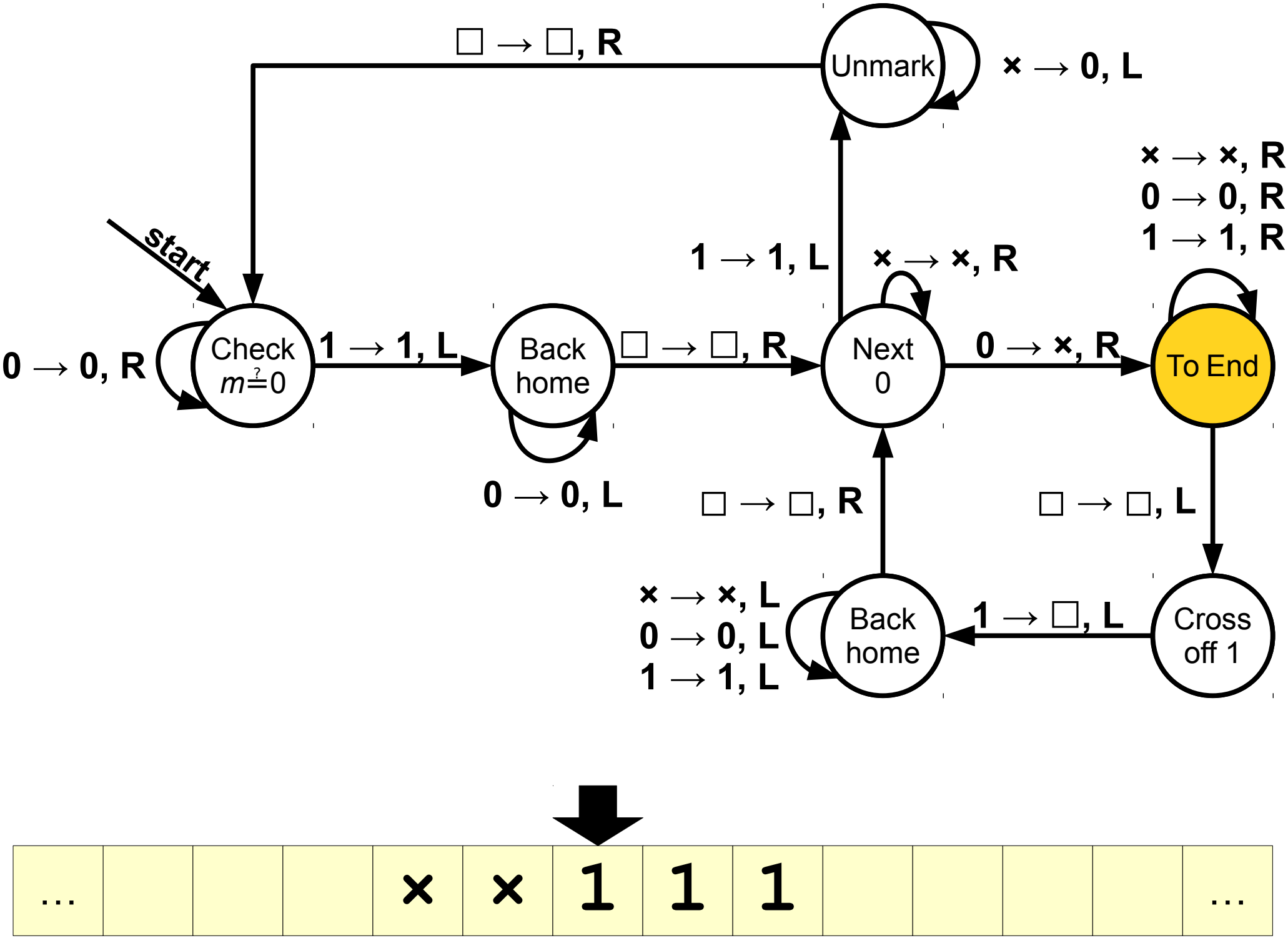
start
Check
m ?= 0
0 → 0, R
1 → 1, L
Back
home
0 → 0, L
□ → □, R
Next
0
1 → 1, L
× → ×, R
0 → ×, R
Unmark
× → 0, L
□ → □, R
To End
× → ×, R
0 → 0, R
1 → 1, R
□ → □, L
Cross
off 1
1 → □, L
Back
home
× → ×, L
0 → 0, L
1 → 1, L
□ → □, R
…
×
×
1
1
1
…

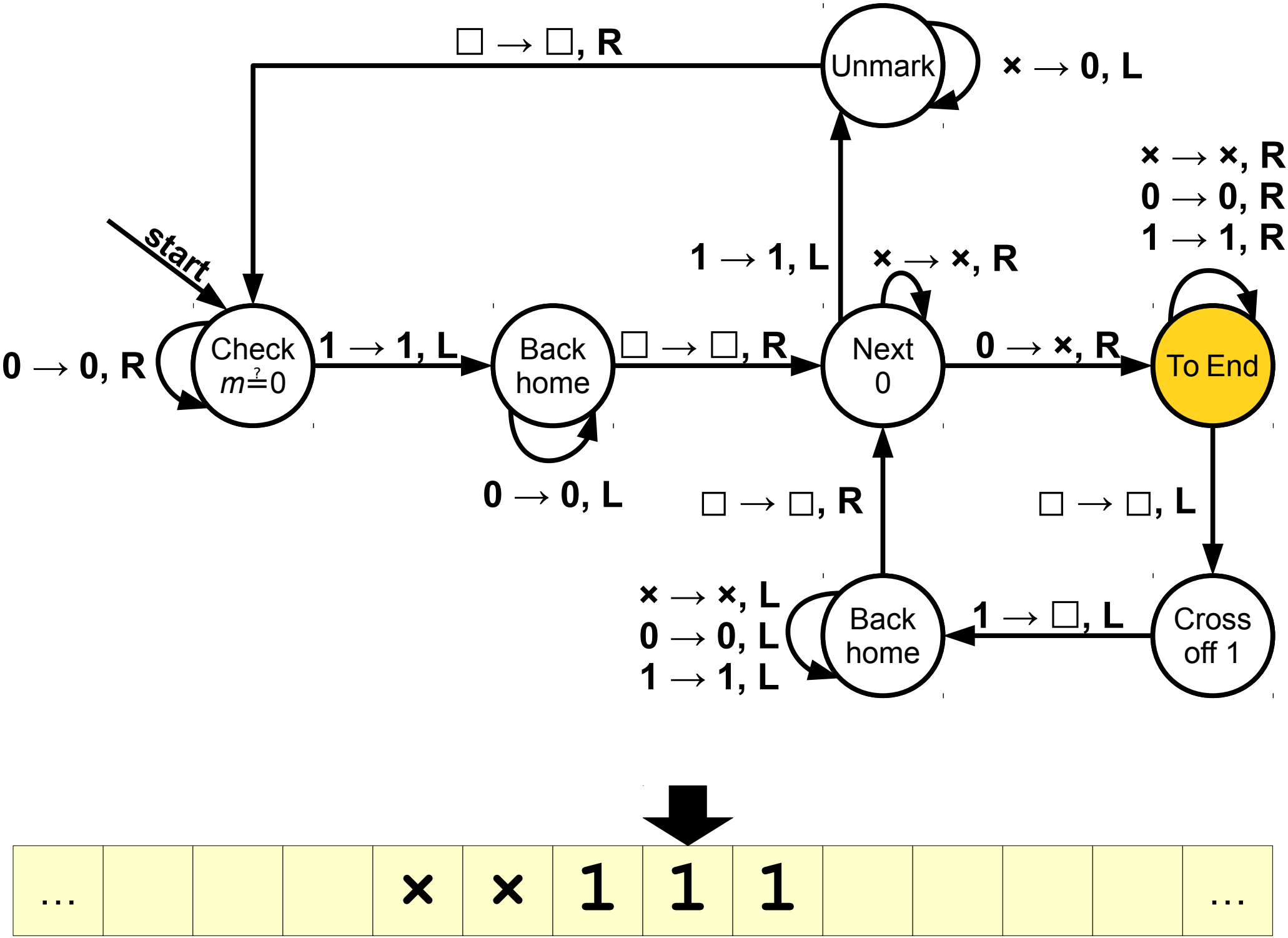
start
Check
m ?= 0
0 → 0, R
1 → 1, L
Back
home
0 → 0, L
□ → □, R
Next
0
1 → 1, L
× → ×, R
0 → ×, R
Unmark
× → 0, L
□ → □, R
To End
× → ×, R
0 → 0, R
1 → 1, R
□ → □, L
Cross
off 1
1 → □, L
Back
home
× → ×, L
0 → 0, L
1 → 1, L
□ → □, R
...
×
×
1
1
1
...

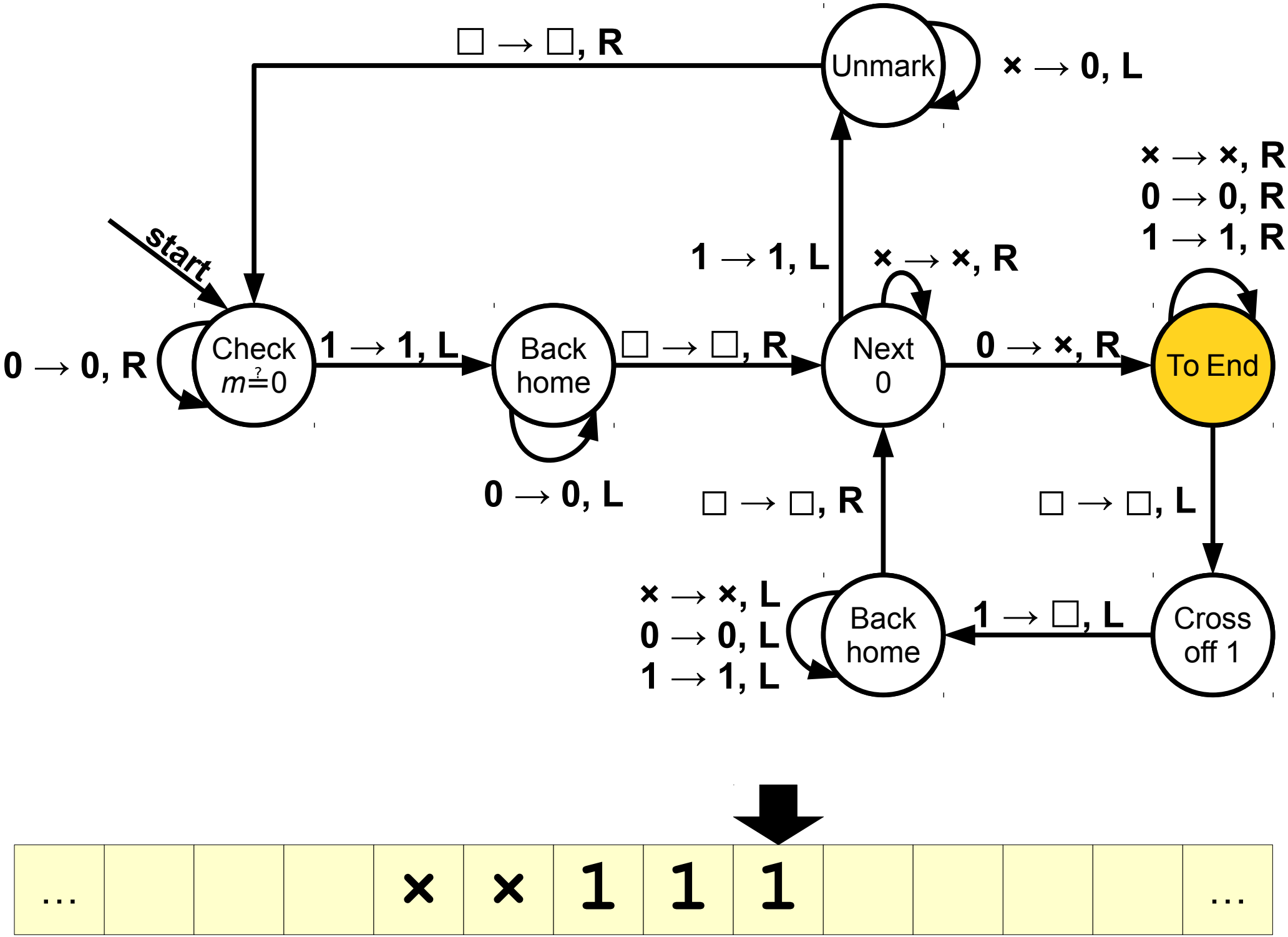
start
Check
m ?= 0
0 → 0, R
1 → 1, L
Back
home
0 → 0, L
□ → □, R
Next
0
1 → 1, L
× → ×, R
0 → ×, R
Unmark
× → 0, L
□ → □, R
To End
× → ×, R
0 → 0, R
1 → 1, R
□ → □, L
Cross
off 1
1 → □, L
Back
home
× → ×, L
0 → 0, L
1 → 1, L
□ → □, R
...
× × 1 1 1
...

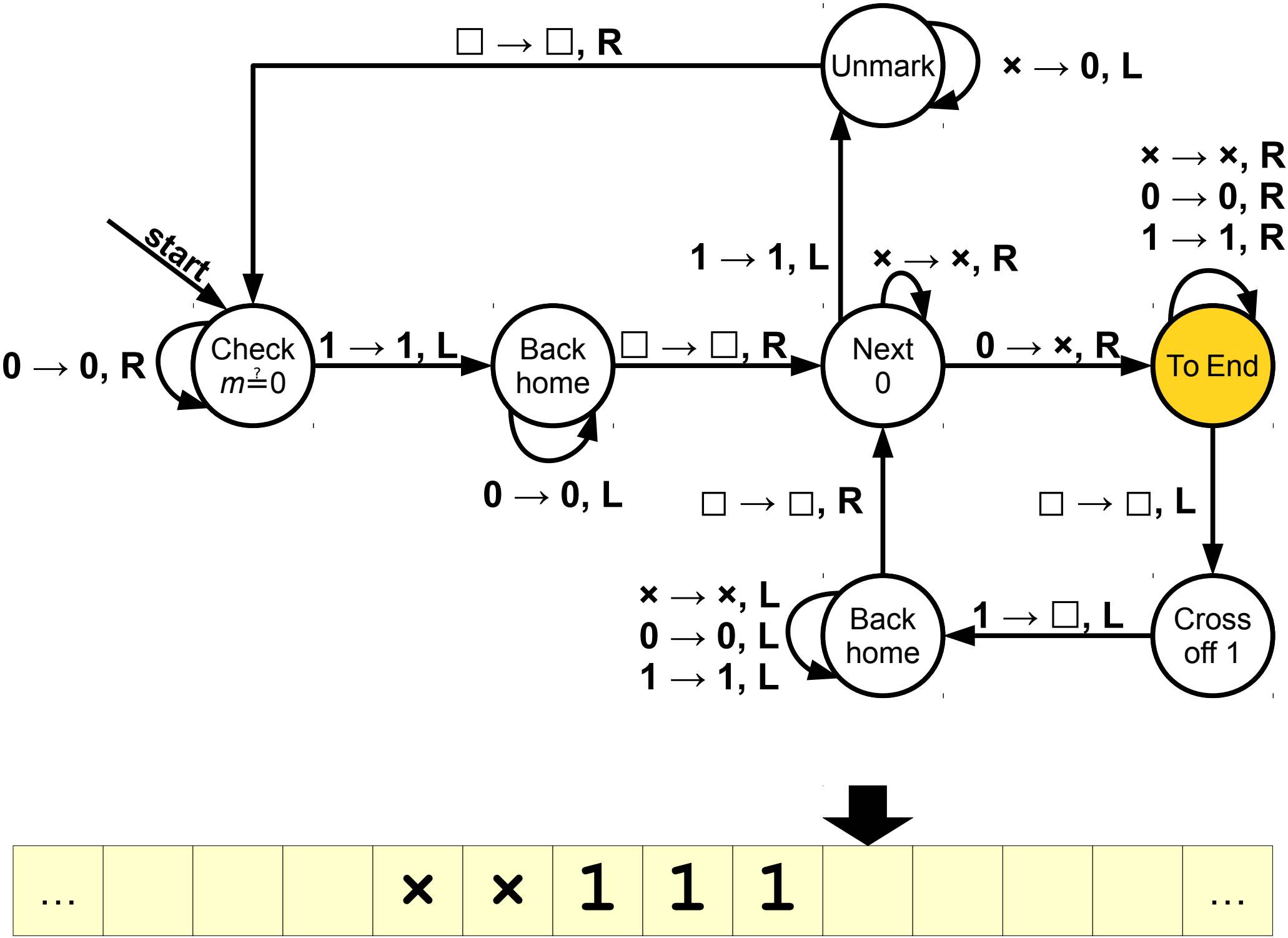
start
Check
m ?= 0
0 → 0, R
1 → 1, L
Back
home
0 → 0, L
□ → □, R
Next
0
1 → 1, L
× → ×, R
0 → ×, R
Unmark
× → 0, L
□ → □, R
To End
× → ×, R
0 → 0, R
1 → 1, R
□ → □, L
Cross
off 1
1 → □, L
Back
home
× → ×, L
0 → 0, L
1 → 1, L
□ → □, R
…
×
×
1
1
1
…

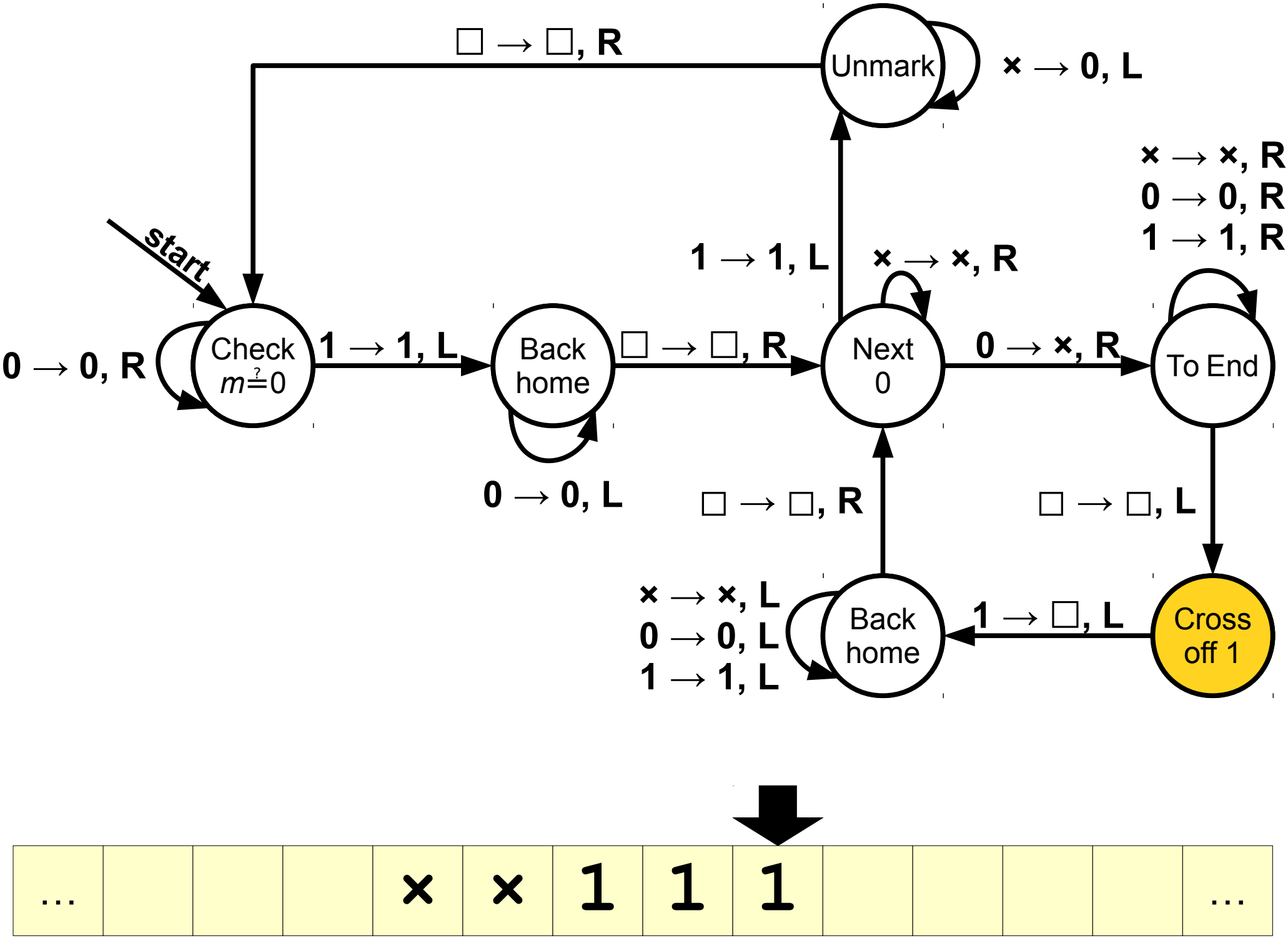
start
Check
m ?= 0
0 → 0, R
1 → 1, L
Back
home
0 → 0, L
□ → □, R
Next
0
1 → 1, L
× → ×, R
0 → ×, R
To End
× → ×, R
0 → 0, R
1 → 1, R
□ → □, L
Cross
off 1
1 → □, L
Back
home
× → ×, L
0 → 0, L
1 → 1, L
□ → □, R
Unmark
× → 0, L
□ → □, R
…
×
×
1
1
1
…

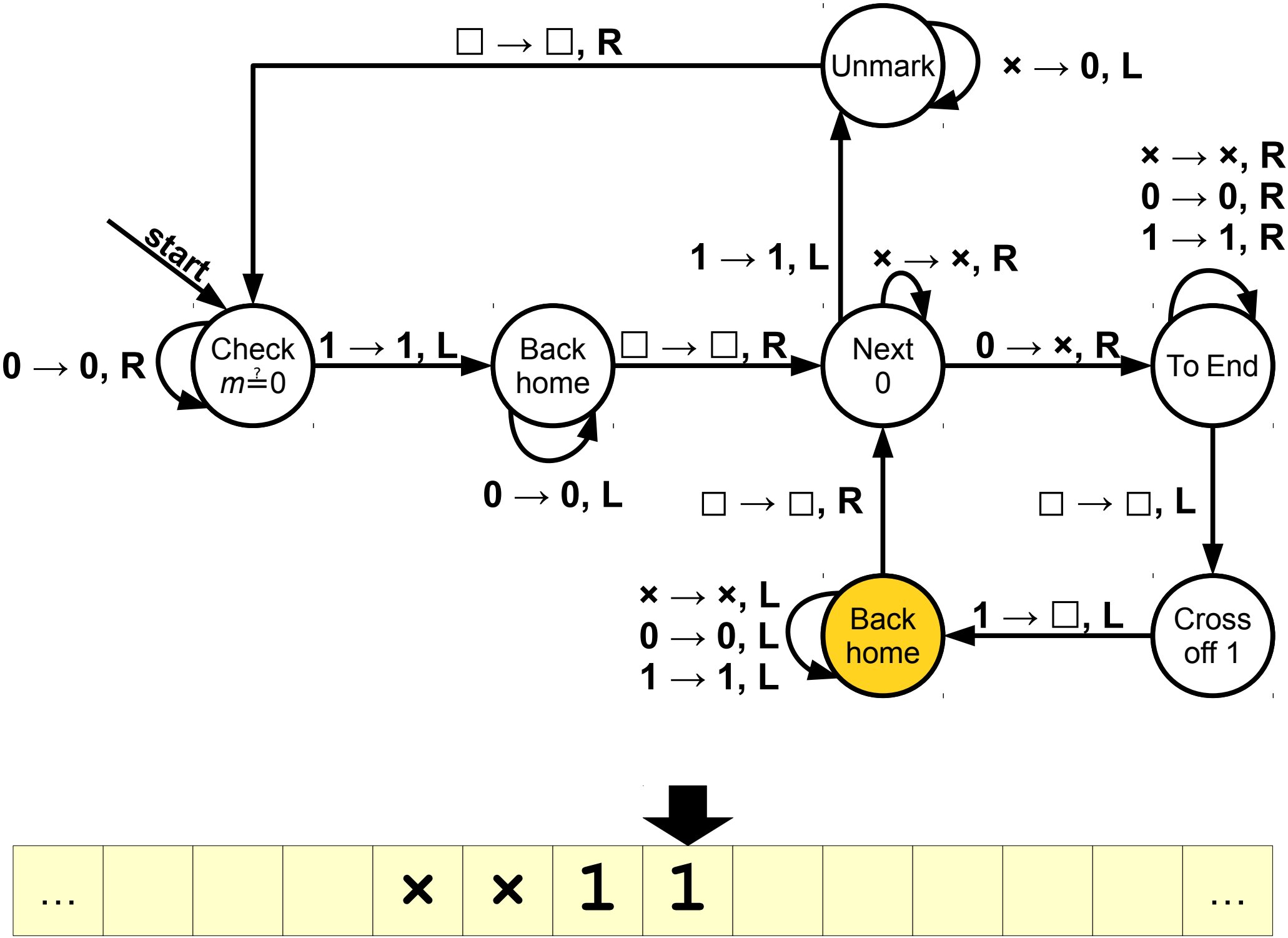
start
Check
m=?0
0 → 0, R
1 → 1, L
Back
home
0 → 0, L
□ → □, R
Next
0
1 → 1, L
× → ×, R
0 → ×, R
Unmark
× → 0, L
□ → □, R
To End
× → ×, R
0 → 0, R
1 → 1, R
□ → □, L
Cross
off 1
1 → □, L
Back
home
× → ×, L
0 → 0, L
1 → 1, L
□ → □, R
…
×
×
1
1
…

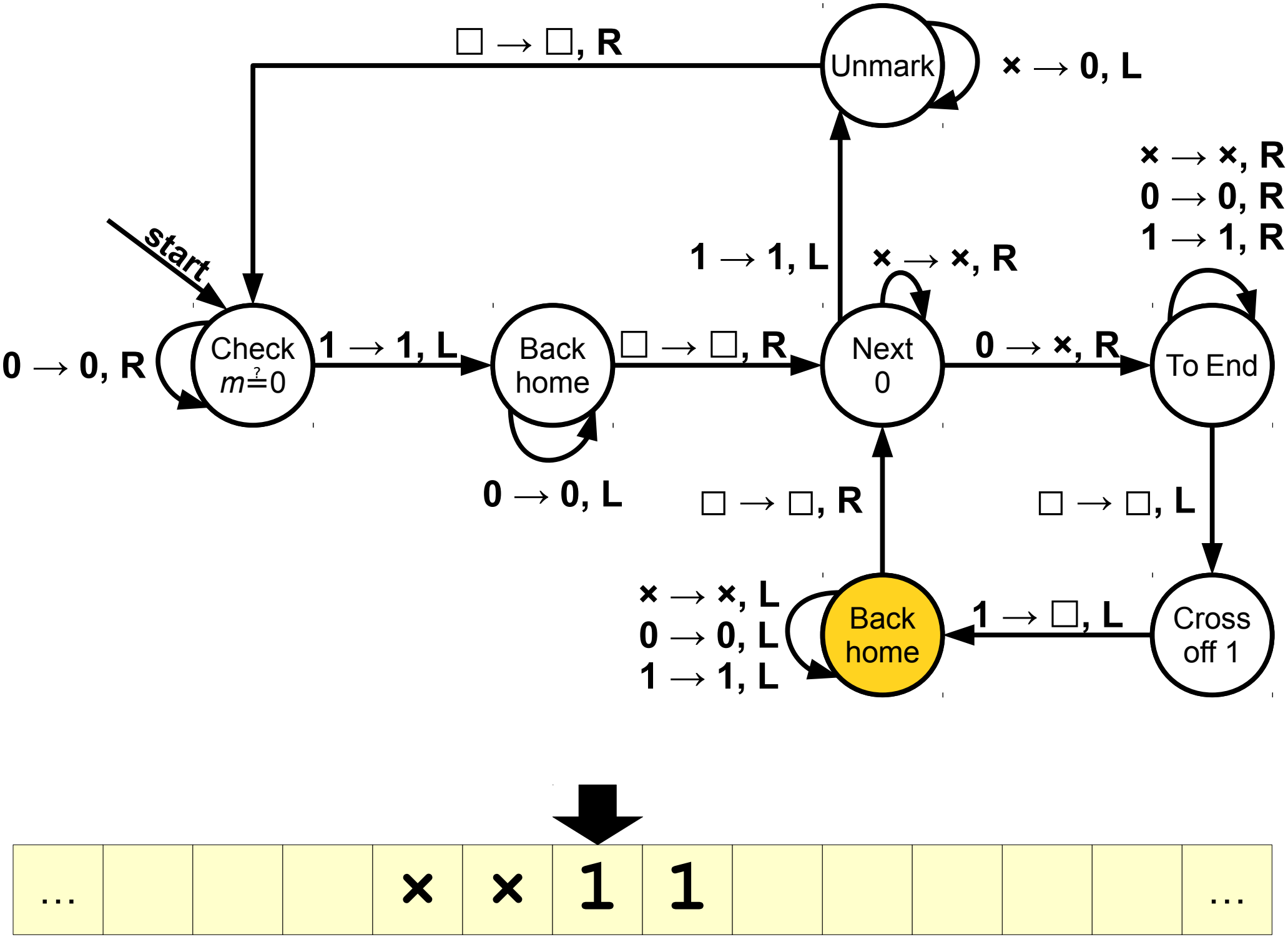
start
Check
m ?= 0
0 → 0, R
1 → 1, L
Back
home
0 → 0, L
□ → □, R
Next
0
1 → 1, L
× → ×, R
0 → ×, R
To End
× → ×, R
0 → 0, R
1 → 1, R
□ → □, L
Cross
off 1
1 → □, L
Back
home
× → ×, L
0 → 0, L
1 → 1, L
□ → □, R
Unmark
× → 0, L
□ → □, R
...
×
×
1
1
...

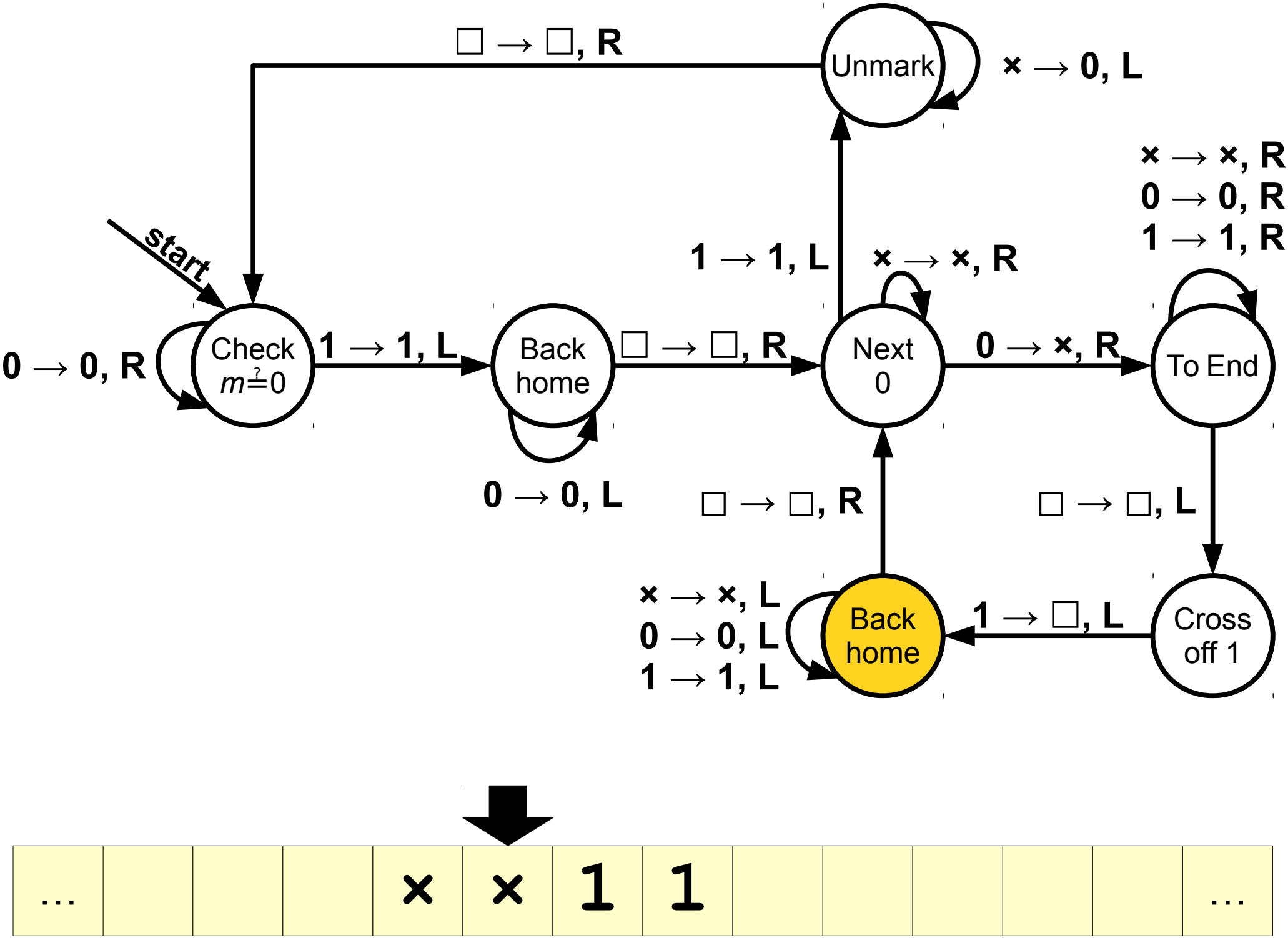
start
Check
m=?0
0 → 0, R
1 → 1, L
Back
home
0 → 0, L
□ → □, R
Next
0
1 → 1, L
× → ×, R
0 → ×, R
Unmark
× → 0, L
□ → □, R
To End
× → ×, R
0 → 0, R
1 → 1, R
□ → □, L
Cross
off 1
1 → □, L
Back
home
□ → □, R
× → ×, L
0 → 0, L
1 → 1, L
...
×
×
1
1
...

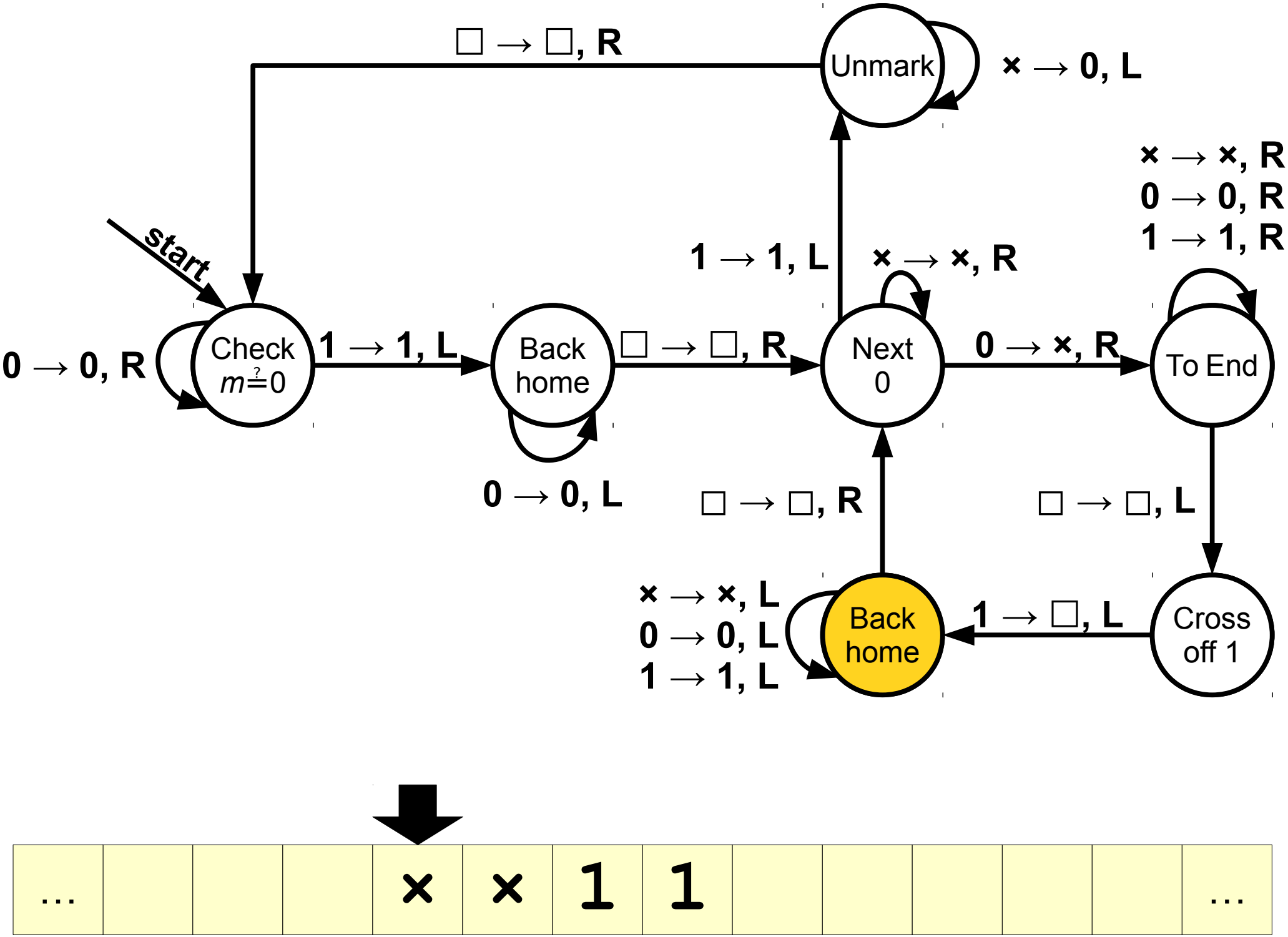
start
Check
m ?= 0
0 → 0, R
1 → 1, L
Back
home
0 → 0, L
□ → □, R
Next
0
1 → 1, L
× → ×, R
0 → ×, R
Unmark
× → 0, L
□ → □, R
To End
× → ×, R
0 → 0, R
1 → 1, R
□ → □, L
Cross
off 1
1 → □, L
Back
home
× → ×, L
0 → 0, L
1 → 1, L
□ → □, R
...
×
×
1
1
...

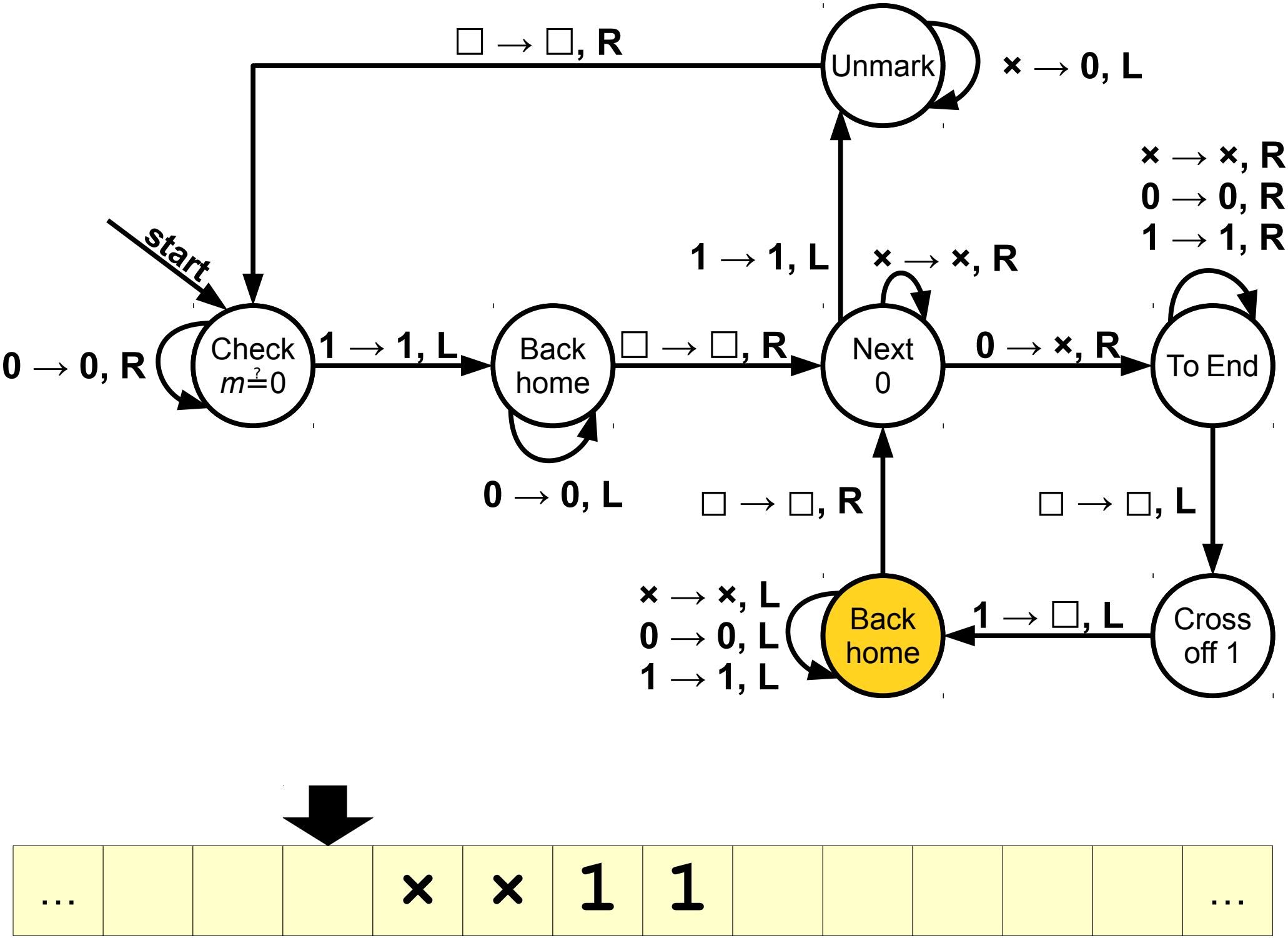
start
Check
m ?= 0
0 → 0, R
1 → 1, L
Back
home
0 → 0, L
□ → □, R
Next
0
1 → 1, L
× → ×, R
0 → ×, R
Unmark
× → 0, L
□ → □, R
To End
× → ×, R
0 → 0, R
1 → 1, R
□ → □, L
Cross
off 1
1 → □, L
Back
home
× → ×, L
0 → 0, L
1 → 1, L
□ → □, R
…
×
×
1
1
…

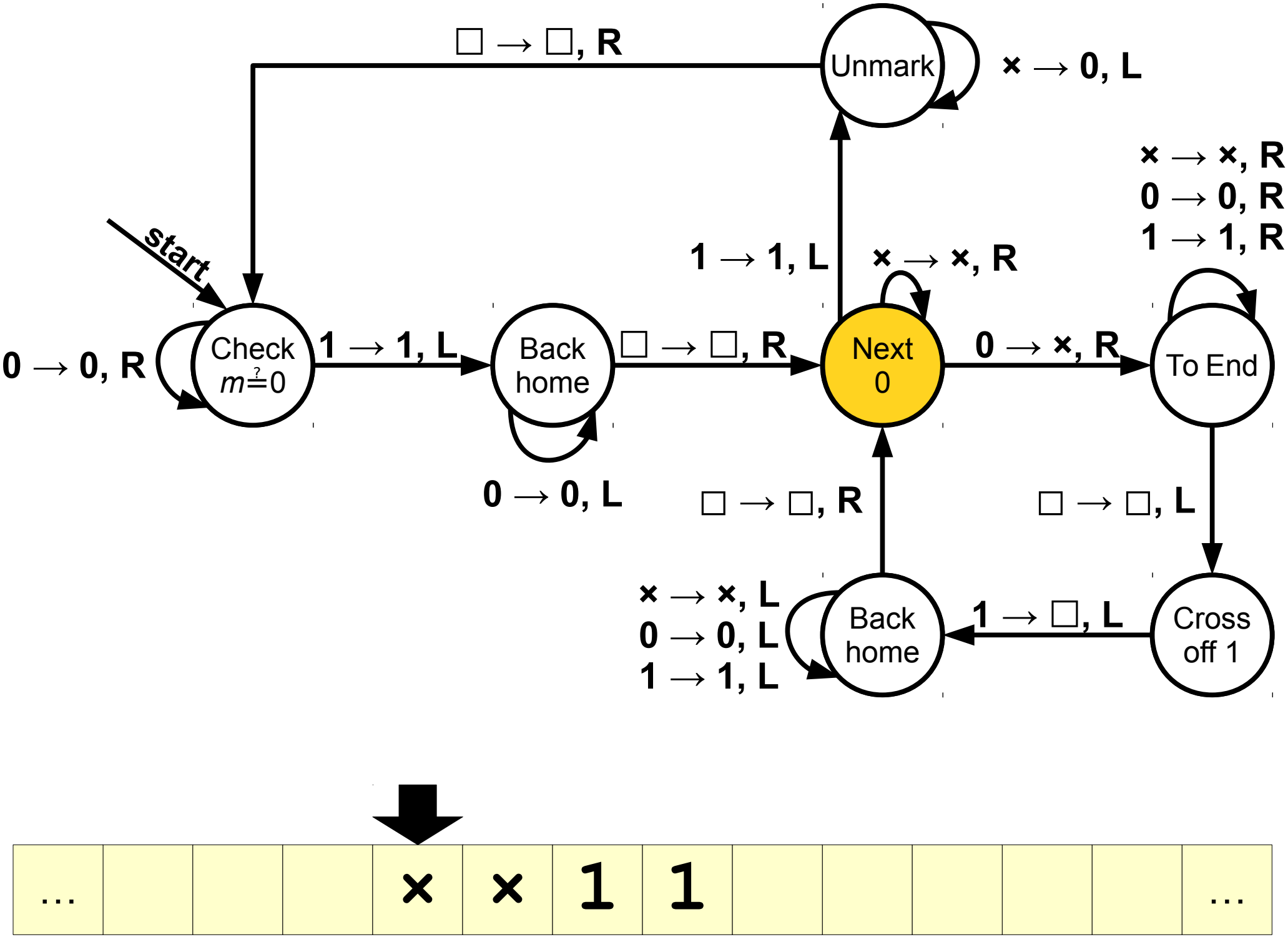
start
Check
m=?0
0 → 0, R
1 → 1, L
Back
home
0 → 0, L
□ → □, R
Next
0
1 → 1, L
× → ×, R
0 → ×, R
Unmark
□ → □, R
× → 0, L
To End
× → ×, R
0 → 0, R
1 → 1, R
□ → □, L
Cross
off 1
1 → □, L
Back
home
× → ×, L
0 → 0, L
1 → 1, L
□ → □, R
...
×
×
1
1
...

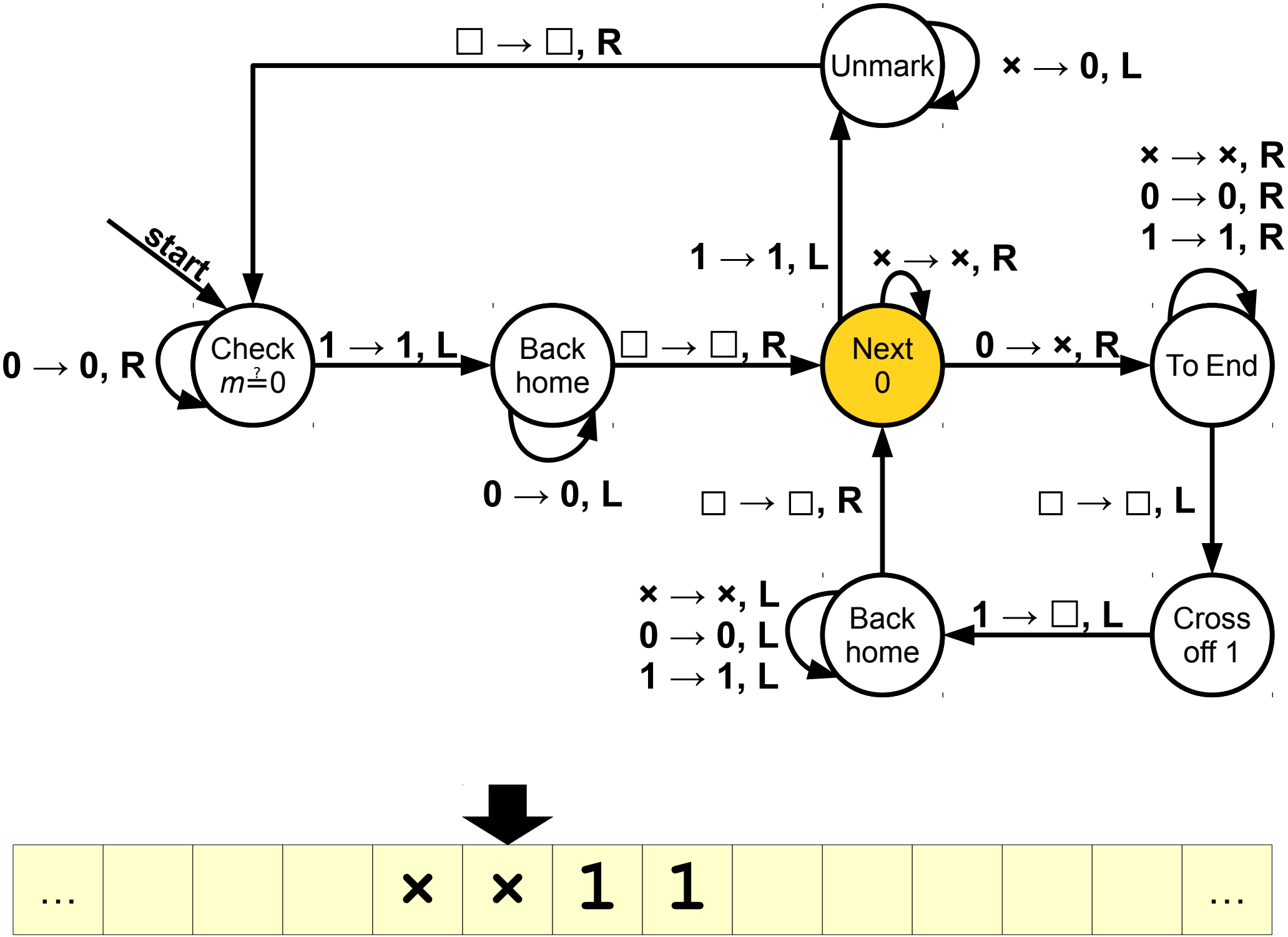
start
Check
m ?= 0
0 → 0, R
1 → 1, L
Back
home
0 → 0, L
□ → □, R
Next
0
1 → 1, L
× → ×, R
0 → ×, R
To End
× → ×, R
0 → 0, R
1 → 1, R
□ → □, L
Cross
off 1
1 → □, L
Back
home
× → ×, L
0 → 0, L
1 → 1, L
□ → □, R
Unmark
× → 0, L
□ → □, R
…
×
×
1
1
…

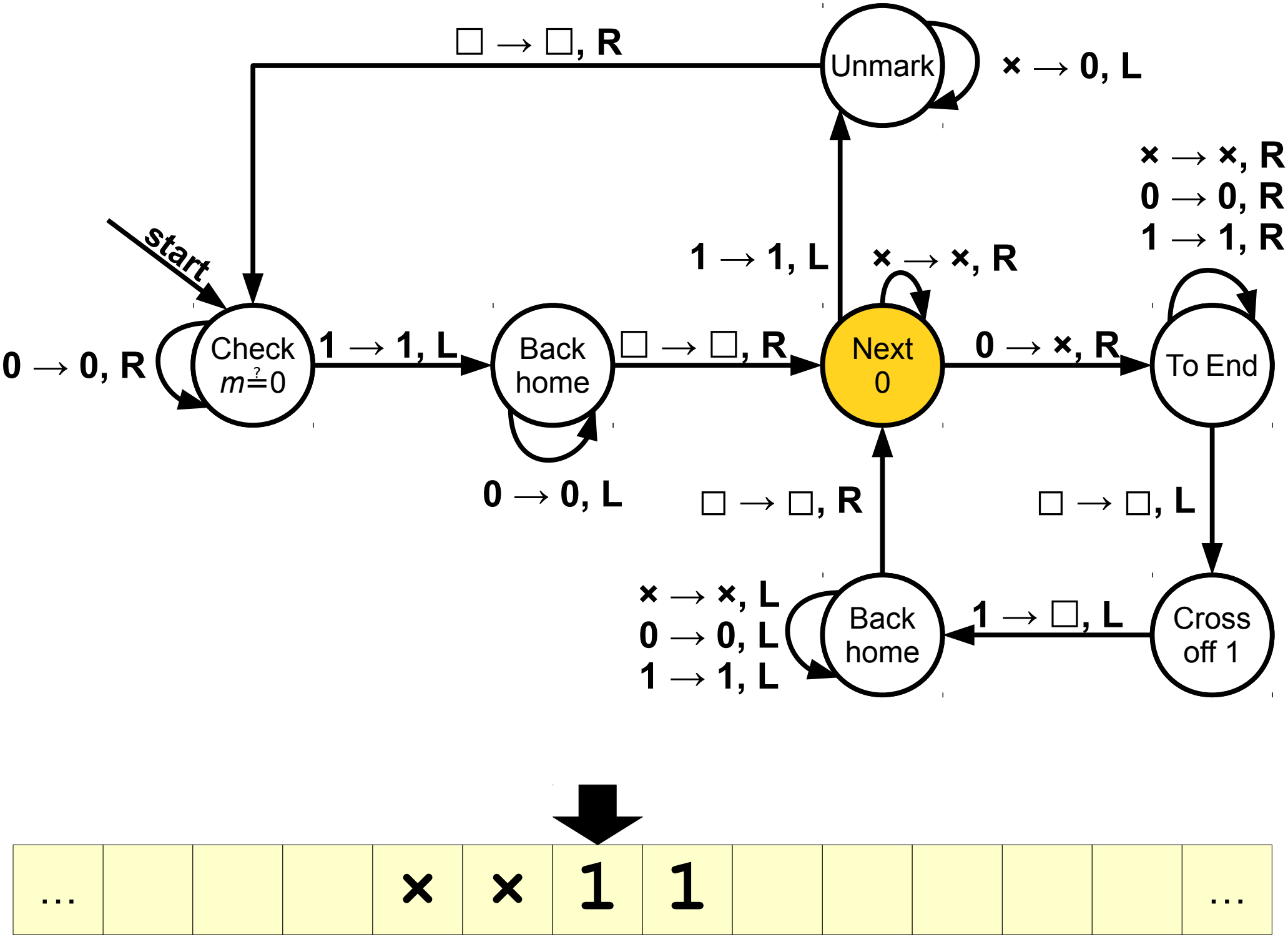
start
Check
m ≟ 0
0 → 0, R
1 → 1, L
Back
home
0 → 0, L
□ → □, R
Next
0
1 → 1, L
× → ×, R
0 → ×, R
Unmark
× → 0, L
□ → □, R
To End
× → ×, R
0 → 0, R
1 → 1, R
□ → □, L
Cross
off 1
1 → □, L
Back
home
× → ×, L
0 → 0, L
1 → 1, L
□ → □, R
…
×
×
1
1
…

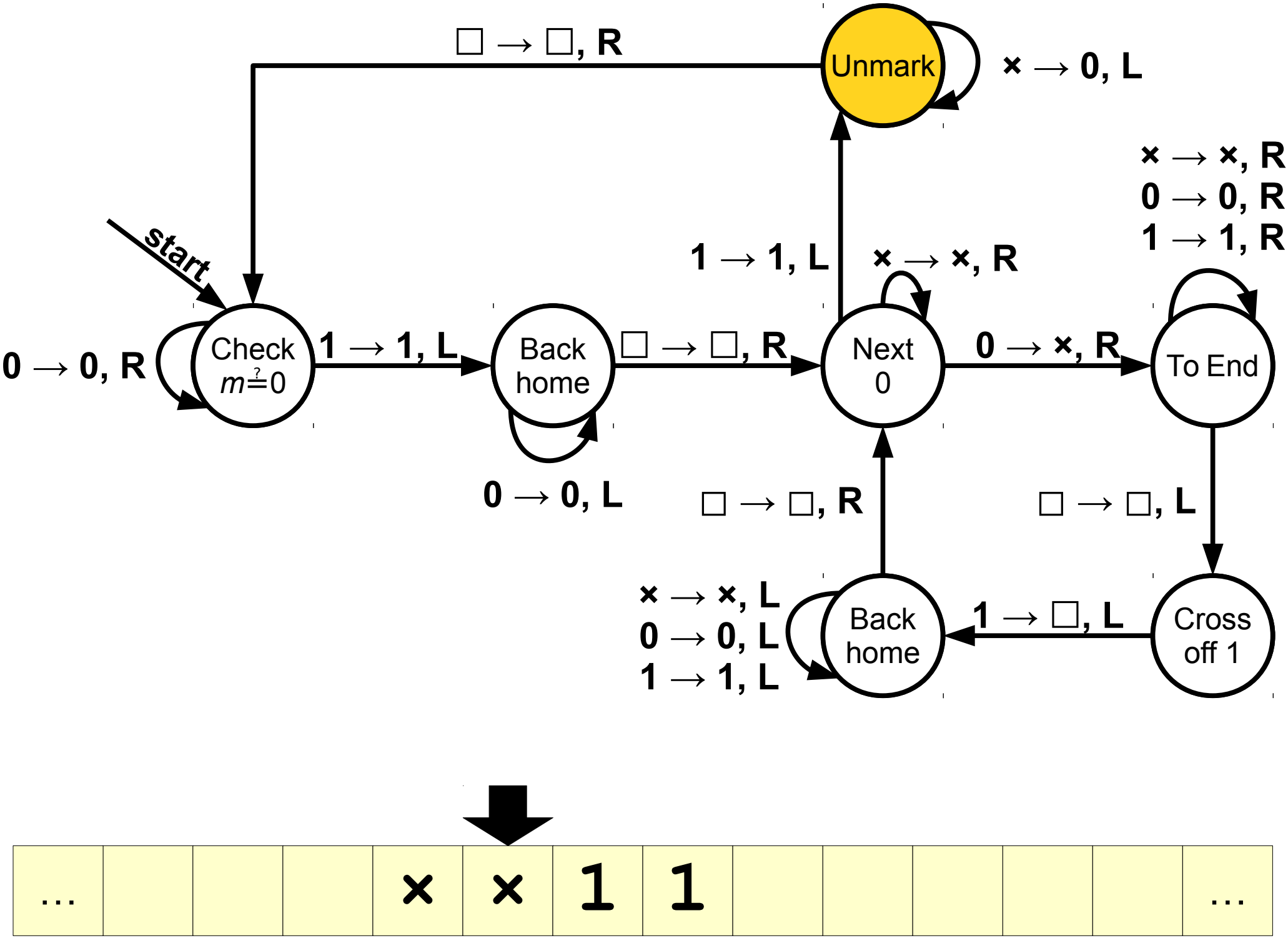
Unmark
□ → □, R
× → 0, L
start
Check
m=?0
0 → 0, R
1 → 1, L
Back
home
0 → 0, L
□ → □, R
Next
0
1 → 1, L
× → ×, R
0 → ×, R
To End
× → ×, R
0 → 0, R
1 → 1, R
□ → □, L
Cross
off 1
1 → □, L
Back
home
□ → □, R
× → ×, L
0 → 0, L
1 → 1, L
... × × 1 1 ...

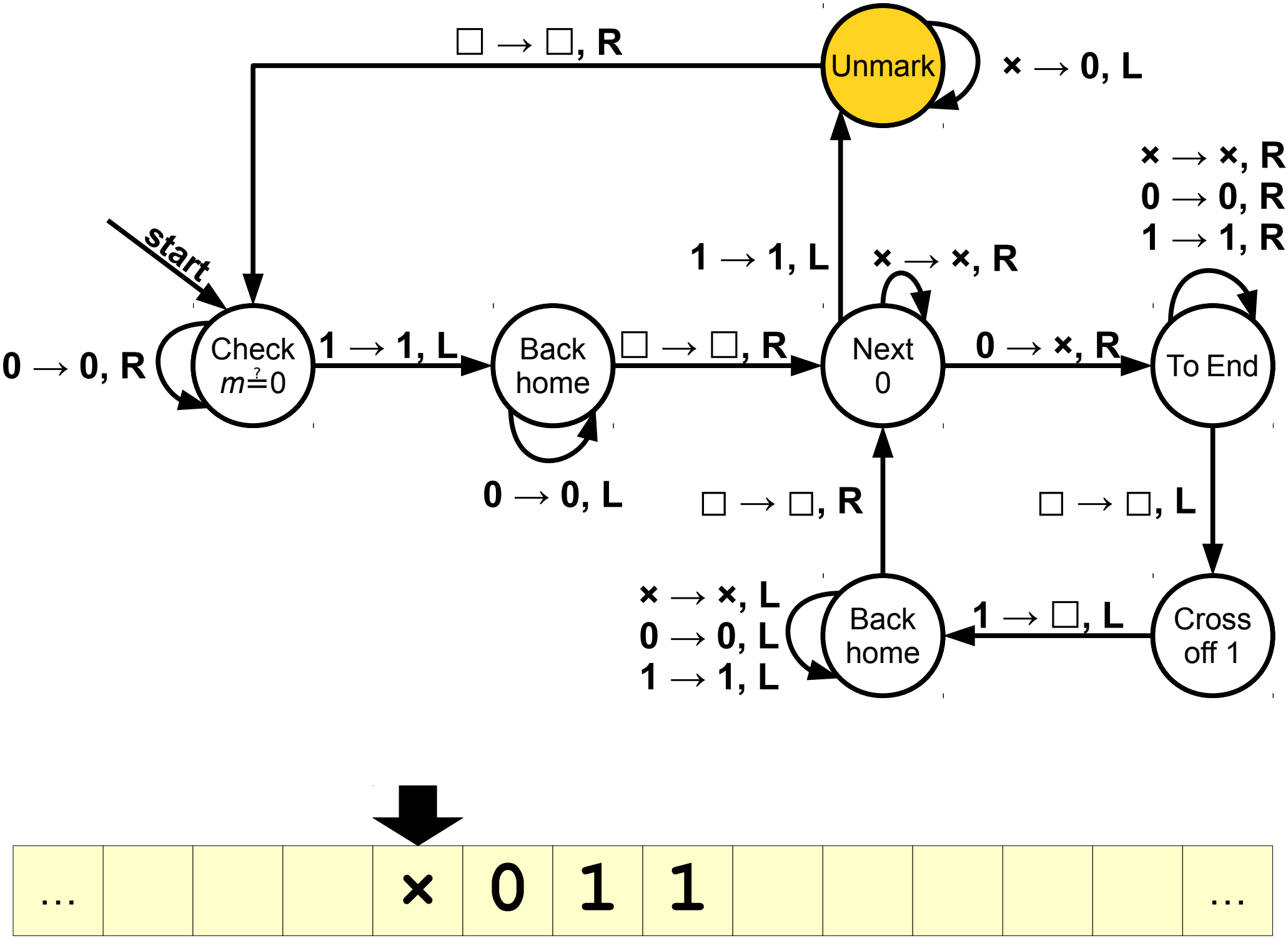
Unmark
□ → □, R
× → 0, L
start
Check
m ≟ 0
0 → 0, R
1 → 1, L
Back
home
0 → 0, L
□ → □, R
Next
0
1 → 1, L
× → ×, R
0 → ×, R
To End
× → ×, R
0 → 0, R
1 → 1, R
□ → □, L
Cross
off 1
1 → □, L
Back
home
□ → □, R
× → ×, L
0 → 0, L
1 → 1, L
...
×
0
1
1
...

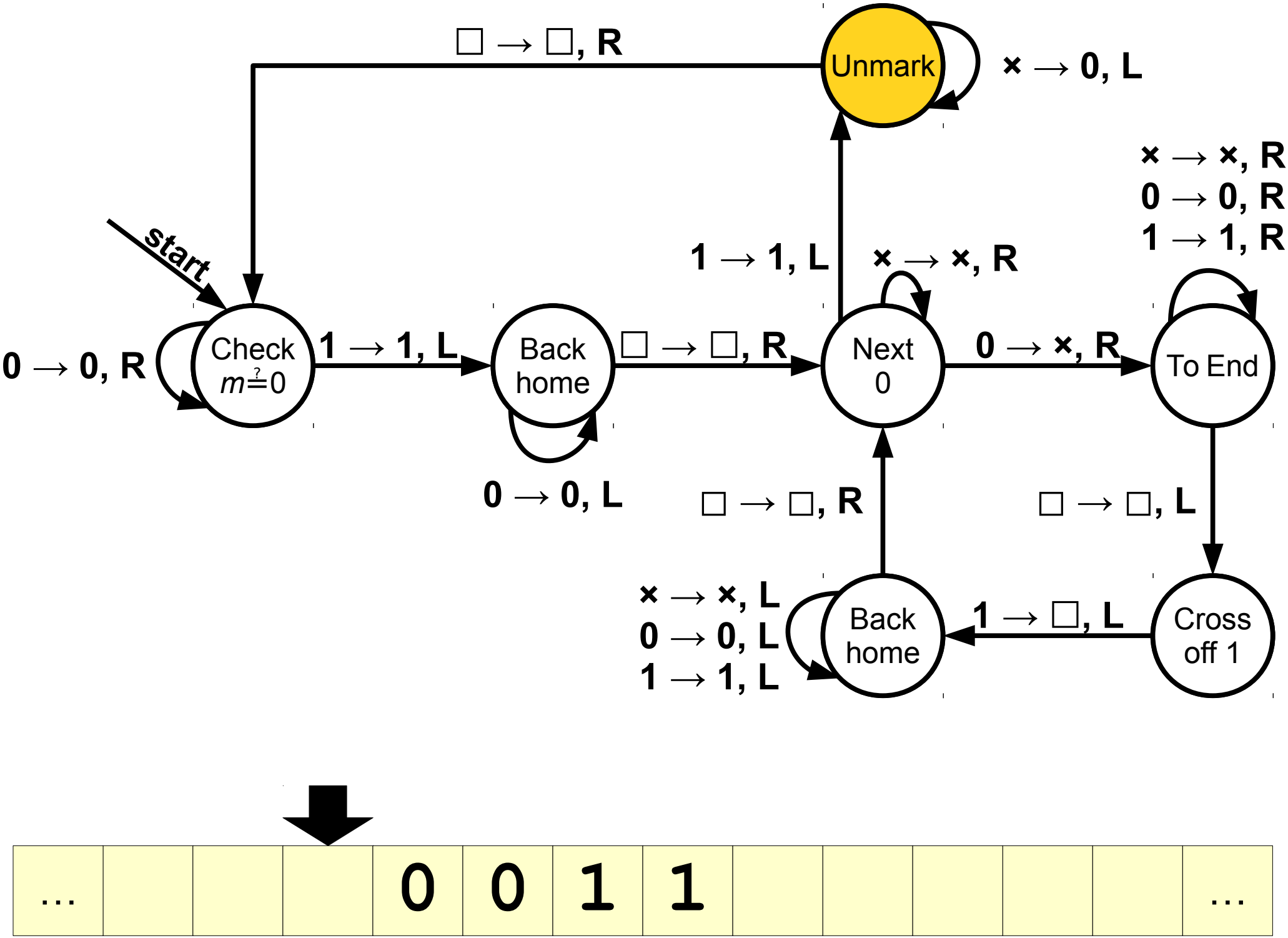
Unmark
□ → □, R
× → 0, L
× → ×, R
0 → 0, R
1 → 1, R
start
1 → 1, L
× → ×, R
Check
m=?0
0 → 0, R
1 → 1, L
Back
home
□ → □, R
Next
0
0 → ×, R
To End
0 → 0, L
□ → □, R
□ → □, L
× → ×, L
0 → 0, L
1 → 1, L
Back
home
1 → □, L
Cross
off 1
…
0 0 1 1
…

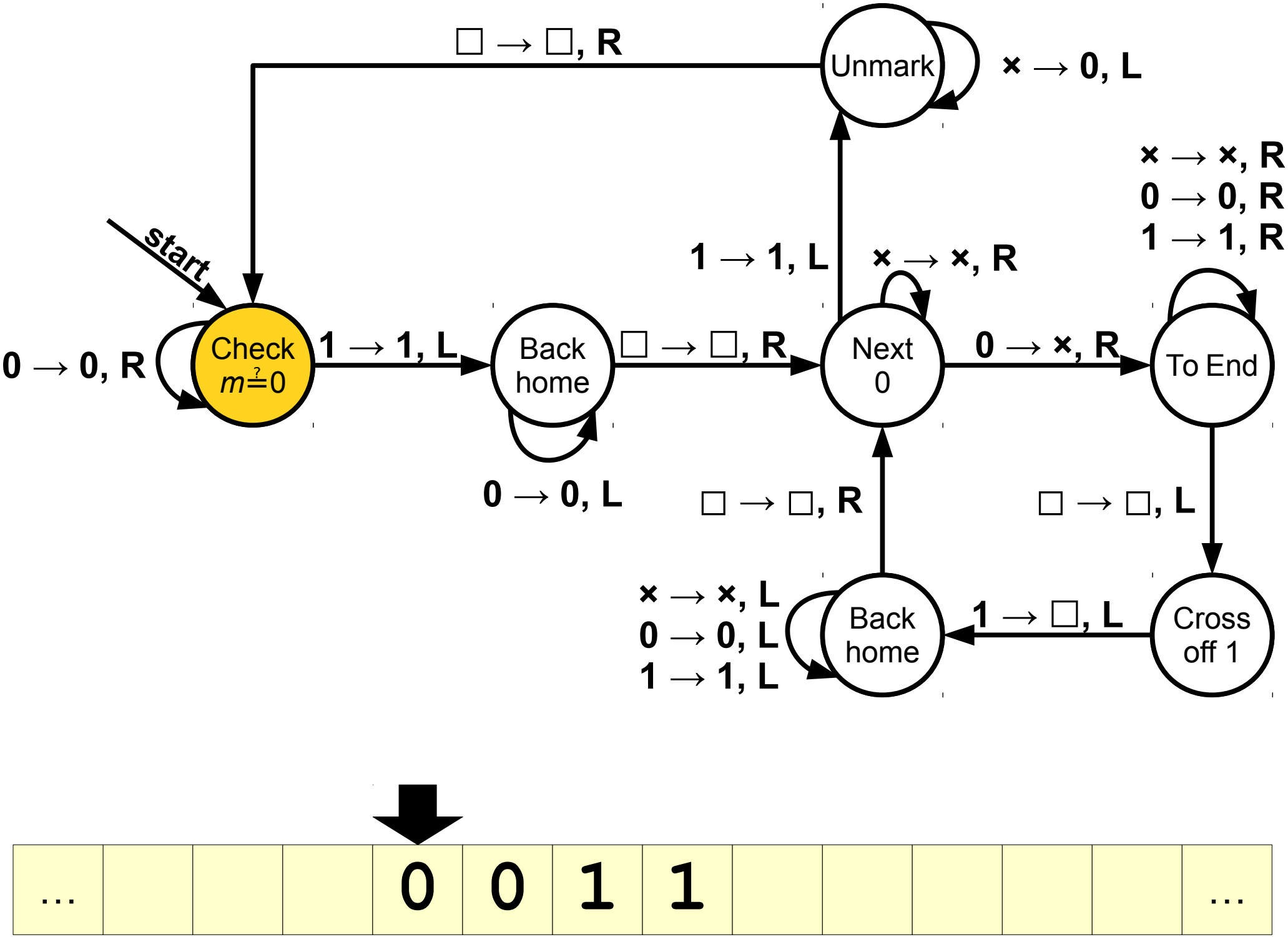
start
Check
m ?= 0
0 → 0, R
1 → 1, L
Back
home
0 → 0, L
□ → □, R
Next
0
1 → 1, L
× → ×, R
0 → ×, R
To End
× → ×, R
0 → 0, R
1 → 1, R
□ → □, L
Cross
off 1
1 → □, L
Back
home
× → ×, L
0 → 0, L
1 → 1, L
□ → □, R
Unmark
× → 0, L
□ → □, R
…
0
0
1
1
…

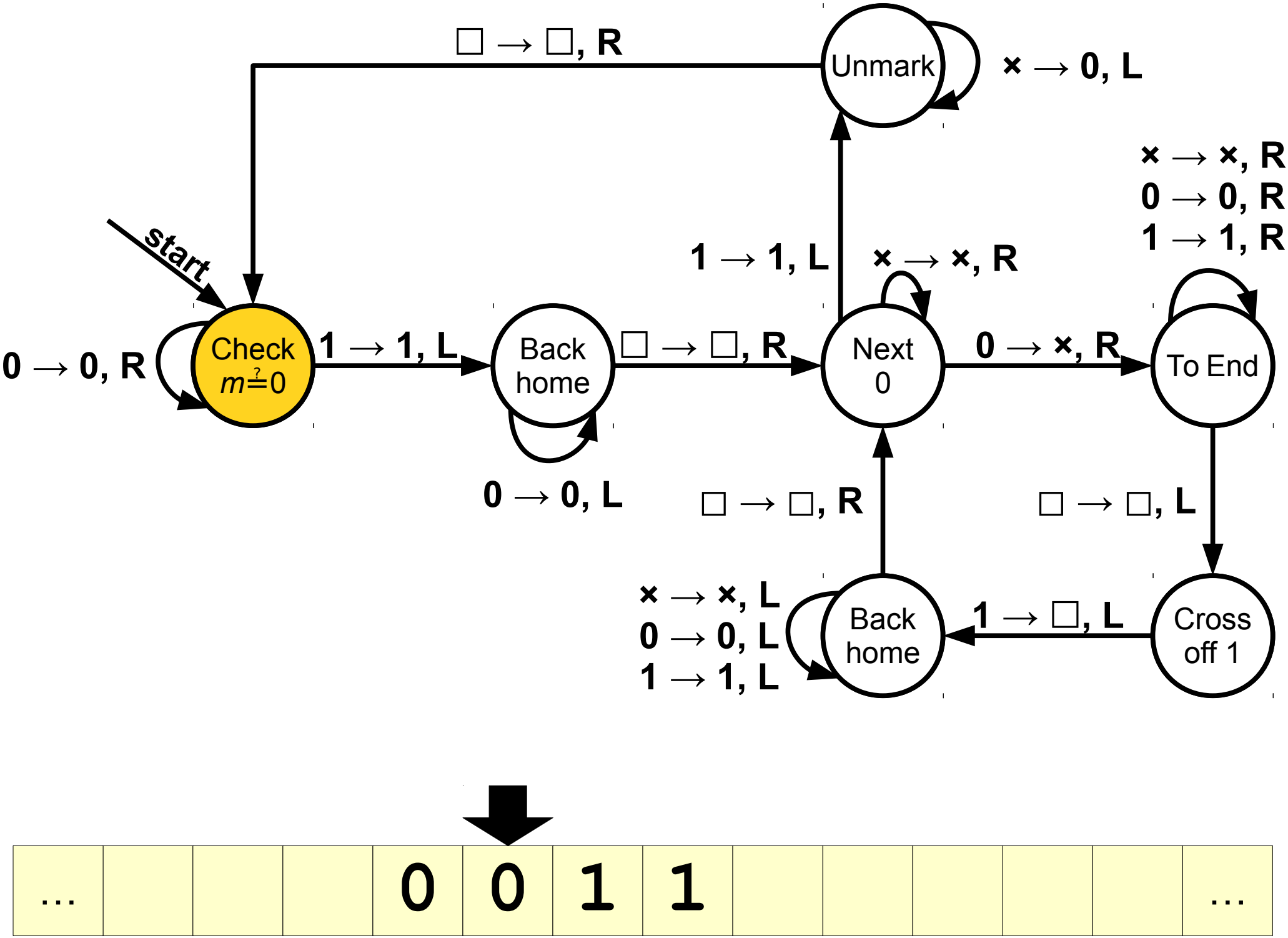
start
Check
m ?= 0
0 → 0, R
1 → 1, L
Back
home
0 → 0, L
□ → □, R
Next
0
1 → 1, L
× → ×, R
0 → ×, R
To End
× → ×, R
0 → 0, R
1 → 1, R
□ → □, L
Cross
off 1
1 → □, L
Back
home
× → ×, L
0 → 0, L
1 → 1, L
□ → □, R
Unmark
× → 0, L
□ → □, R
…
0
0
1
1
…

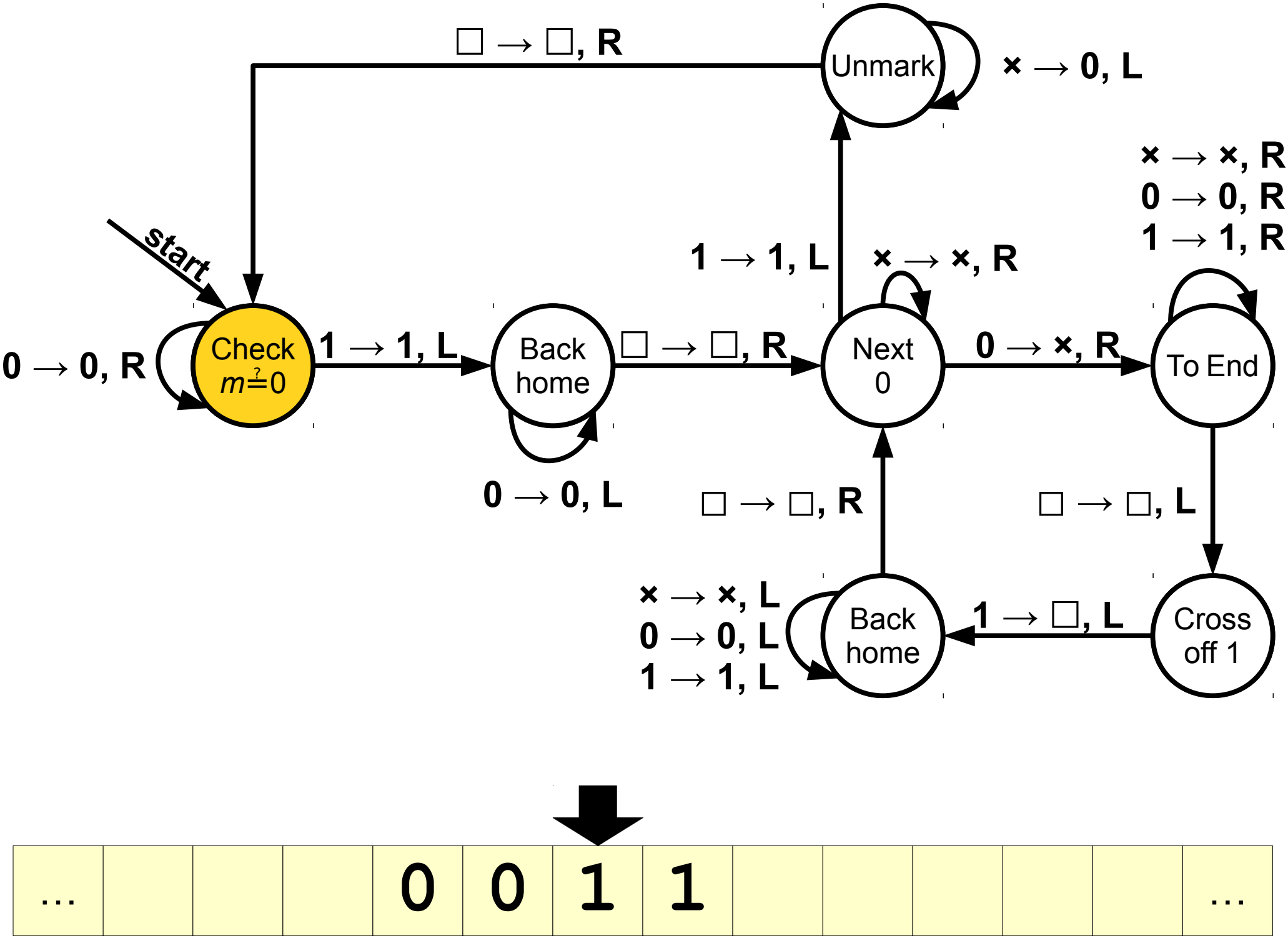
start
Check
m ?= 0
0 → 0, R
1 → 1, L
Back
home
0 → 0, L
□ → □, R
Next
0
1 → 1, L
× → ×, R
0 → ×, R
To End
× → ×, R
0 → 0, R
1 → 1, R
□ → □, L
Cross
off 1
1 → □, L
Back
home
× → ×, L
0 → 0, L
1 → 1, L
□ → □, R
Unmark
× → 0, L
□ → □, R
…
0
0
1
1
…

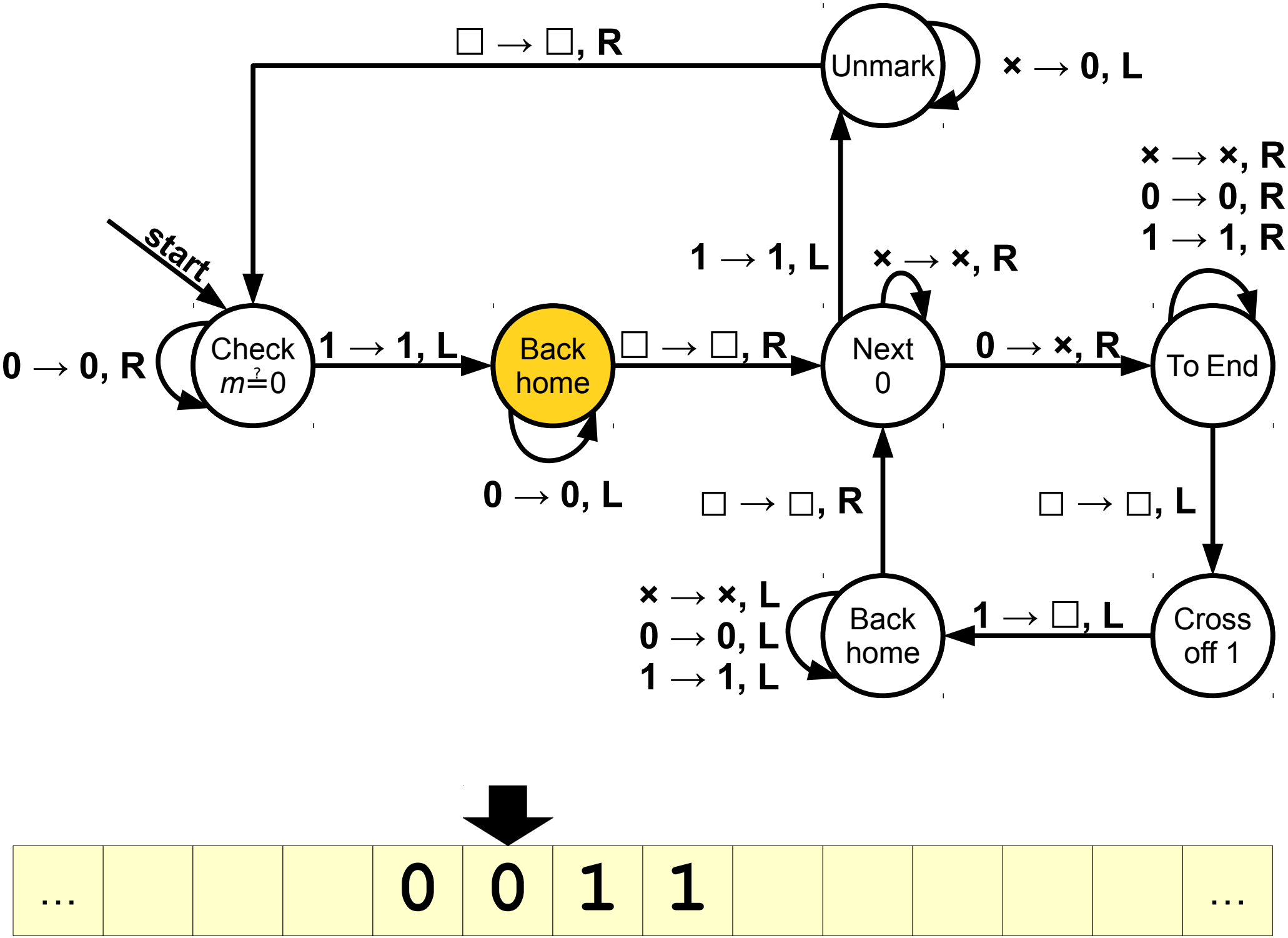
start
Check
m ?= 0
0 → 0, R
1 → 1, L
Back
home
0 → 0, L
□ → □, R
Next
0
1 → 1, L
× → ×, R
0 → ×, R
To End
× → ×, R
0 → 0, R
1 → 1, R
□ → □, L
Cross
off 1
1 → □, L
Back
home
× → ×, L
0 → 0, L
1 → 1, L
□ → □, R
Unmark
× → 0, L
□ → □, R
…
0
0
1
1
…

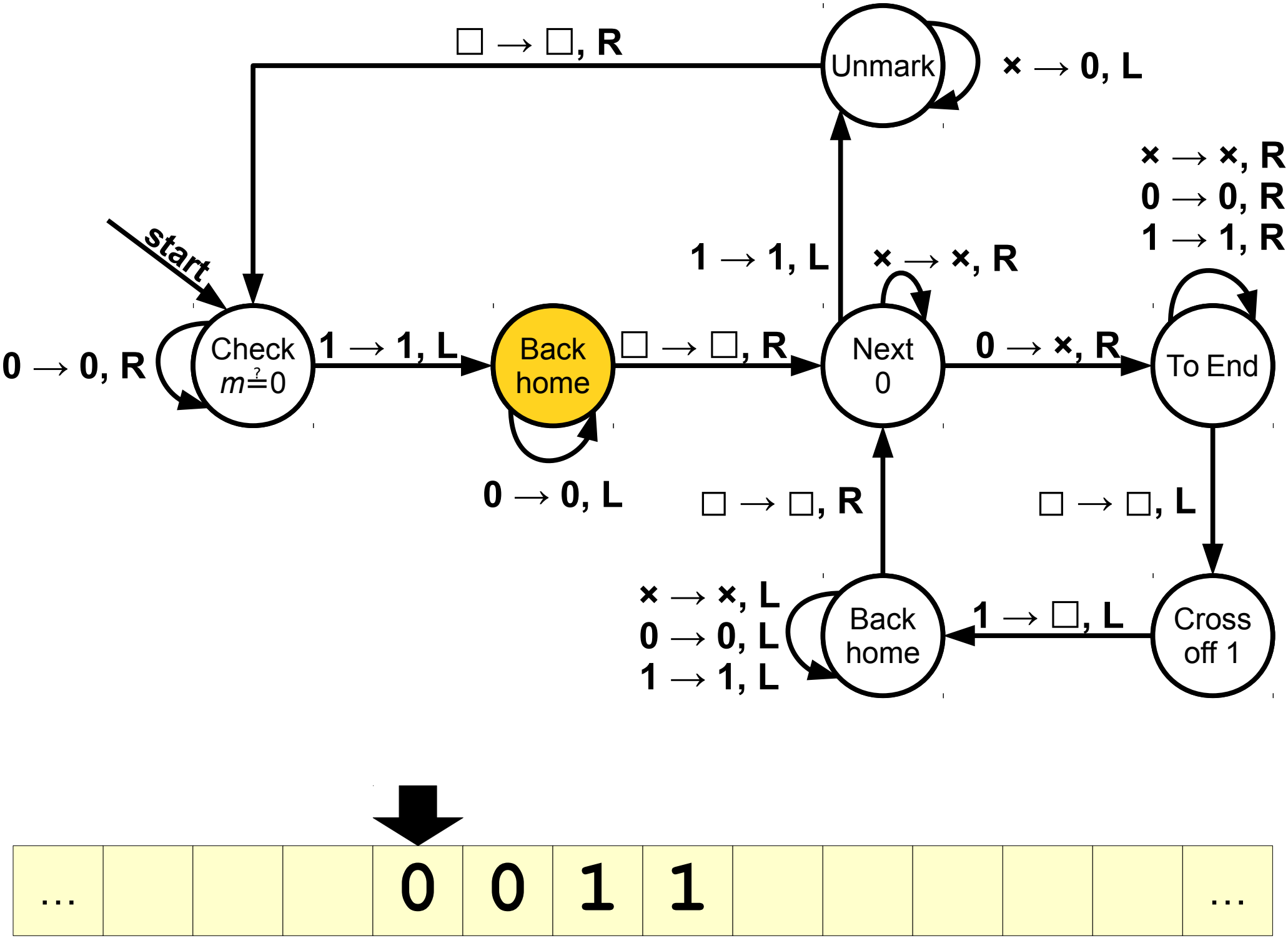
Unmark
□ → □, R
× → 0, L
× → ×, R
0 → 0, R
1 → 1, R
start
1 → 1, L
× → ×, R
Check
m=?0
0 → 0, R
1 → 1, L
Back
home
□ → □, R
Next
0
0 → ×, R
To End
0 → 0, L
□ → □, R
□ → □, L
× → ×, L
0 → 0, L
1 → 1, L
Back
home
1 → □, L
Cross
off 1
…
0
0
1
1
…

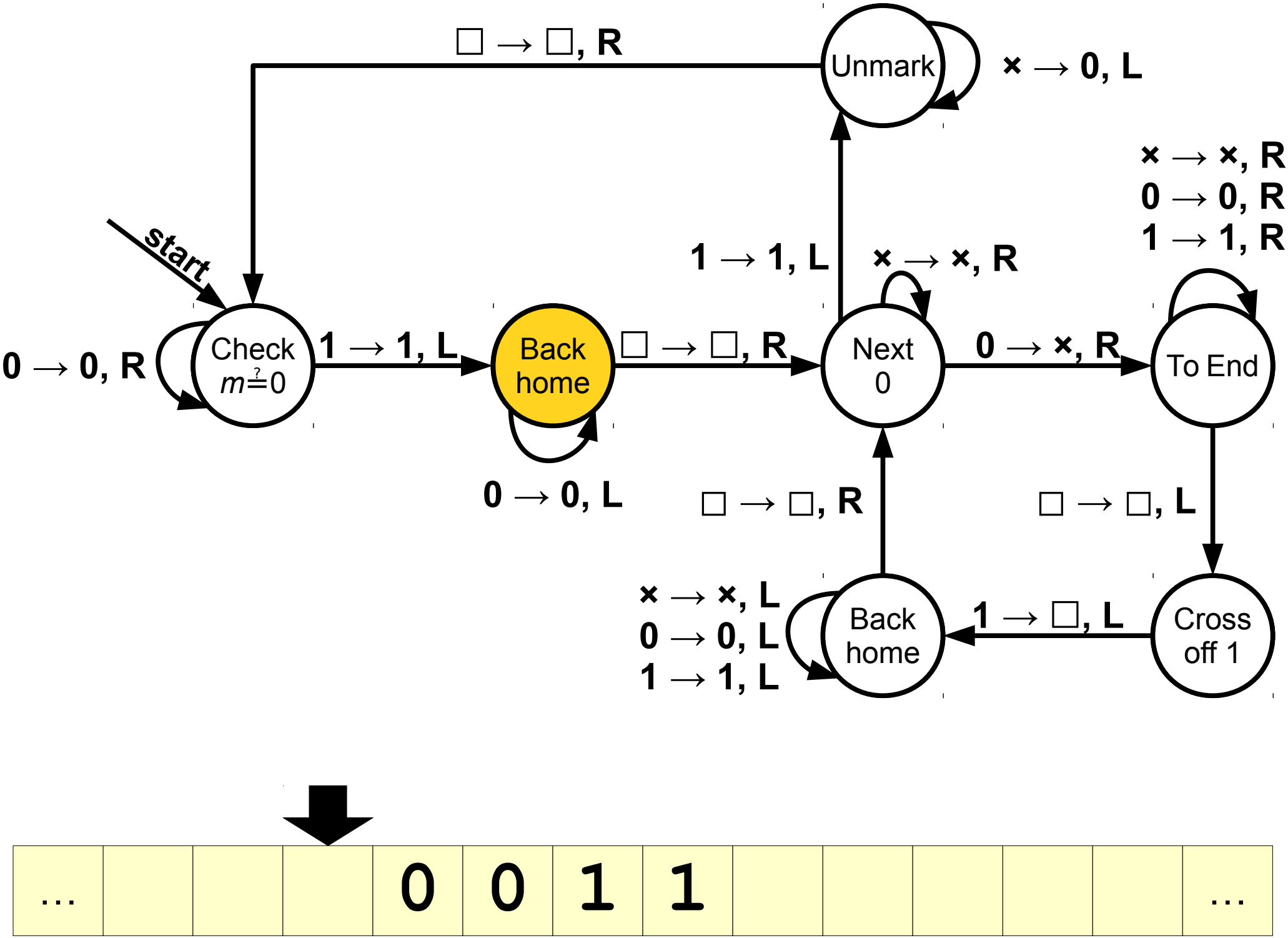
start
Check
m ?= 0
0 → 0, R
1 → 1, L
Back
home
0 → 0, L
□ → □, R
Next
0
1 → 1, L
× → ×, R
0 → ×, R
To End
× → ×, R
0 → 0, R
1 → 1, R
□ → □, L
Cross
off 1
1 → □, L
Back
home
× → ×, L
0 → 0, L
1 → 1, L
□ → □, R
Unmark
× → 0, L
□ → □, R
…
0 0 1 1
…

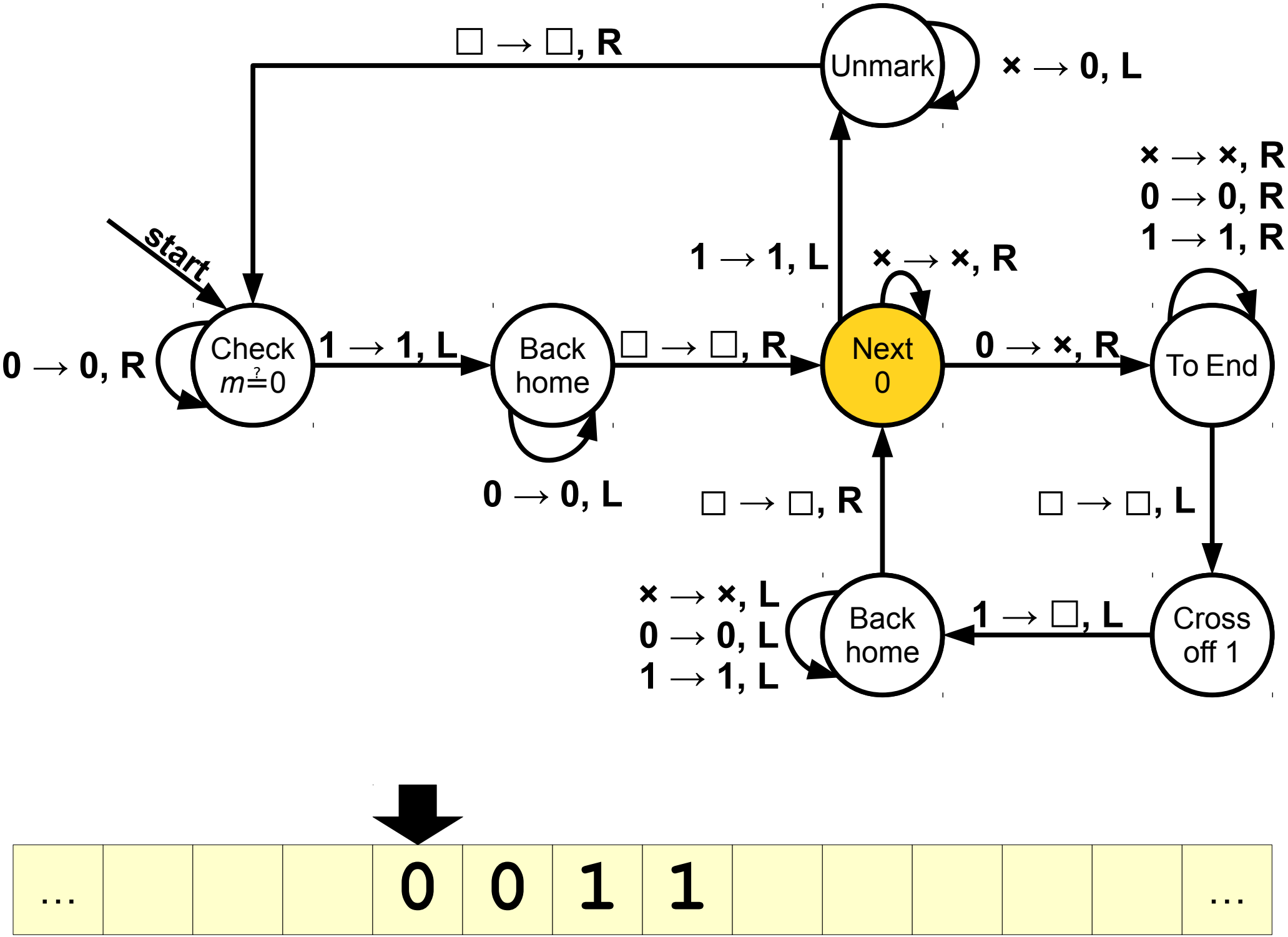
Unmark
□ → □, R
× → 0, L
× → ×, R
0 → 0, R
1 → 1, R
start
1 → 1, L
× → ×, R
Check
m=?0
0 → 0, R
1 → 1, L
Back
home
□ → □, R
Next
0
0 → ×, R
To End
0 → 0, L
□ → □, R
□ → □, L
× → ×, L
0 → 0, L
1 → 1, L
Back
home
1 → □, L
Cross
off 1
…
0
0
1
1
…

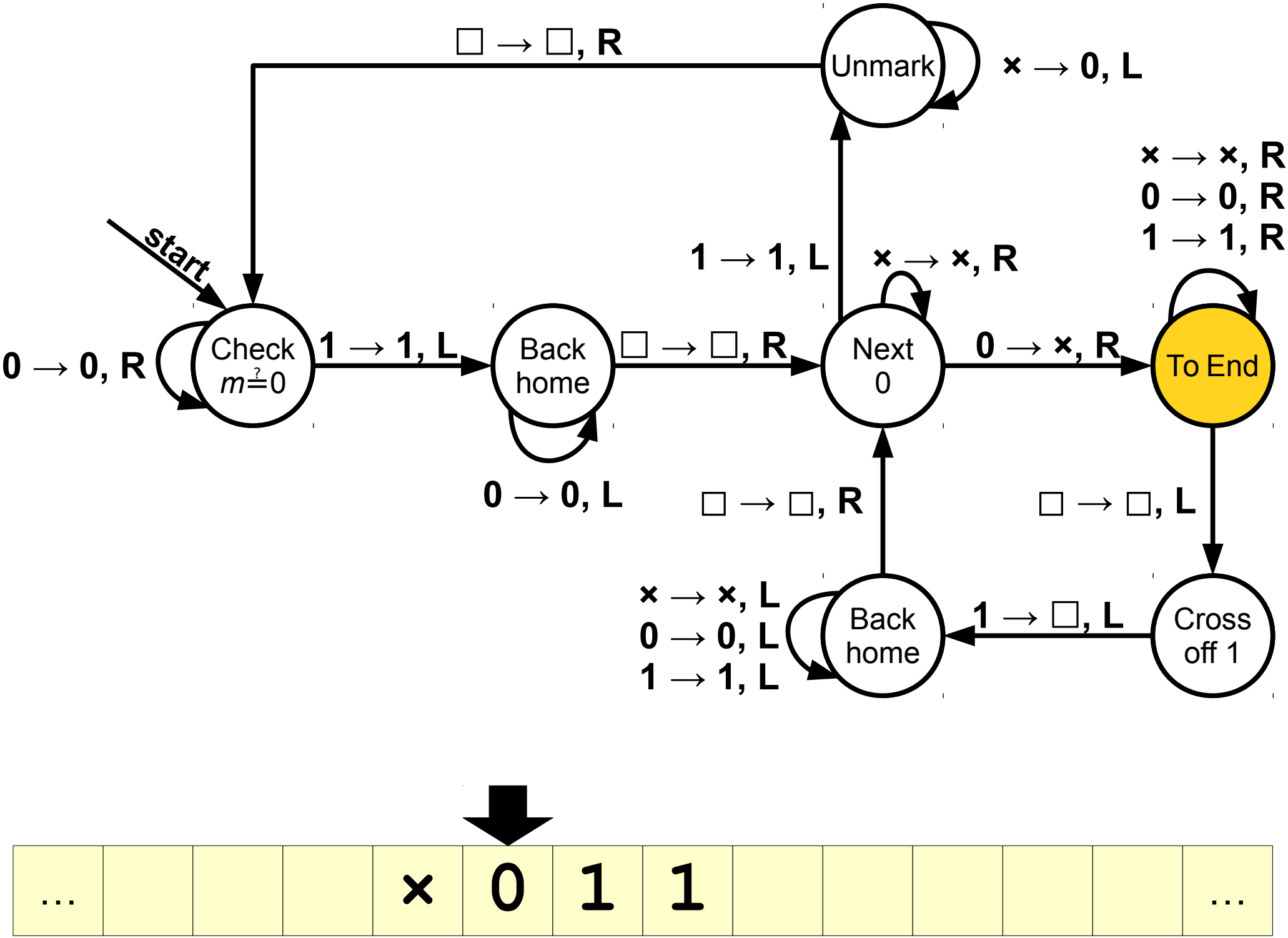
start
Check
m ?= 0
0 → 0, R
1 → 1, L
Back
home
0 → 0, L
□ → □, R
Next
0
1 → 1, L
× → ×, R
0 → ×, R
Unmark
× → 0, L
□ → □, R
To End
× → ×, R
0 → 0, R
1 → 1, R
□ → □, L
Cross
off 1
1 → □, L
Back
home
× → ×, L
0 → 0, L
1 → 1, L
□ → □, R
…
×
0
1
1
…

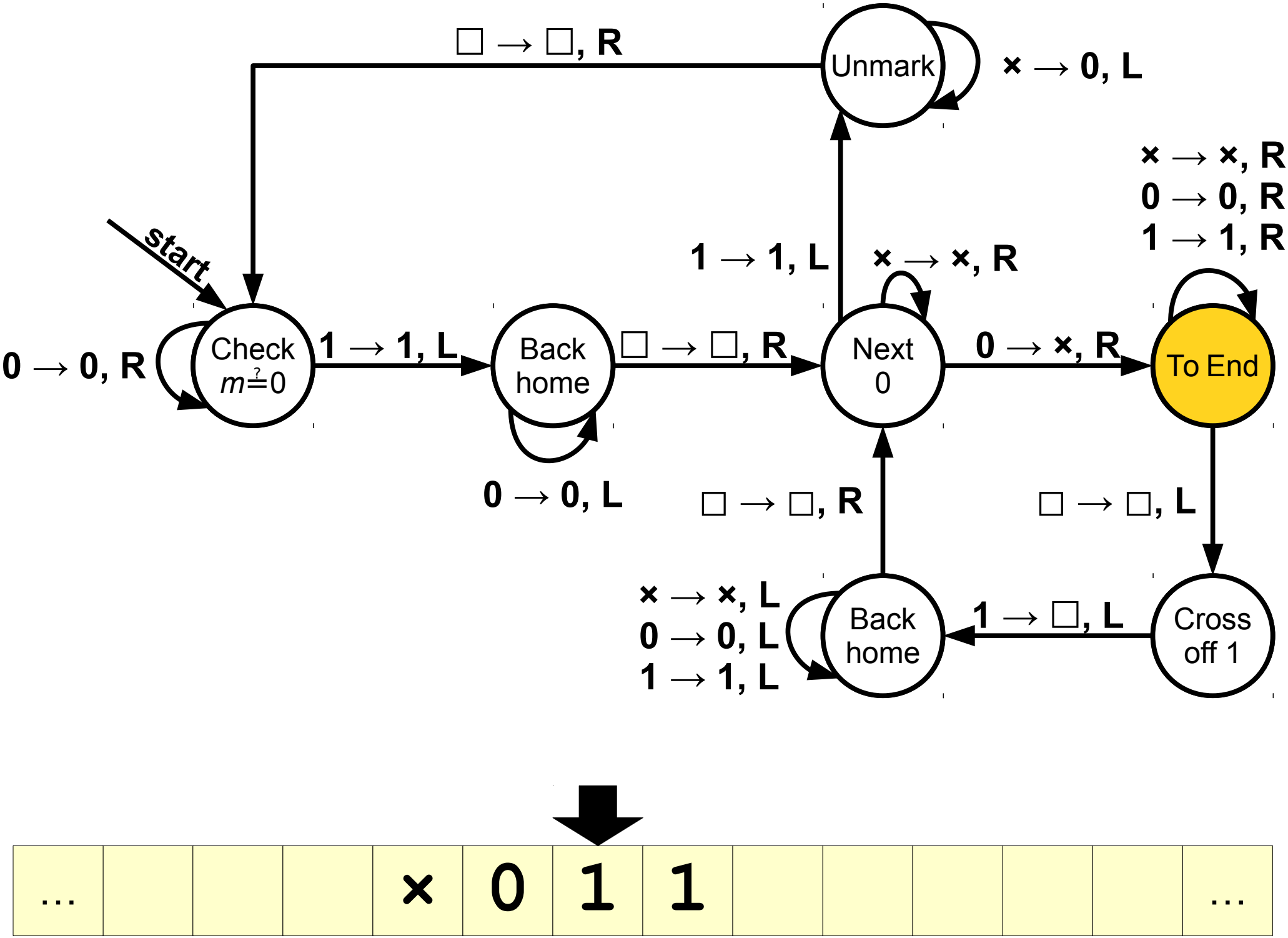
start
Check
m ?= 0
0 → 0, R
1 → 1, L
Back
home
0 → 0, L
□ → □, R
Next
0
1 → 1, L
× → ×, R
0 → ×, R
Unmark
× → 0, L
□ → □, R
To End
× → ×, R
0 → 0, R
1 → 1, R
□ → □, L
Cross
off 1
1 → □, L
Back
home
× → ×, L
0 → 0, L
1 → 1, L
□ → □, R
…
×
0
1
1
…

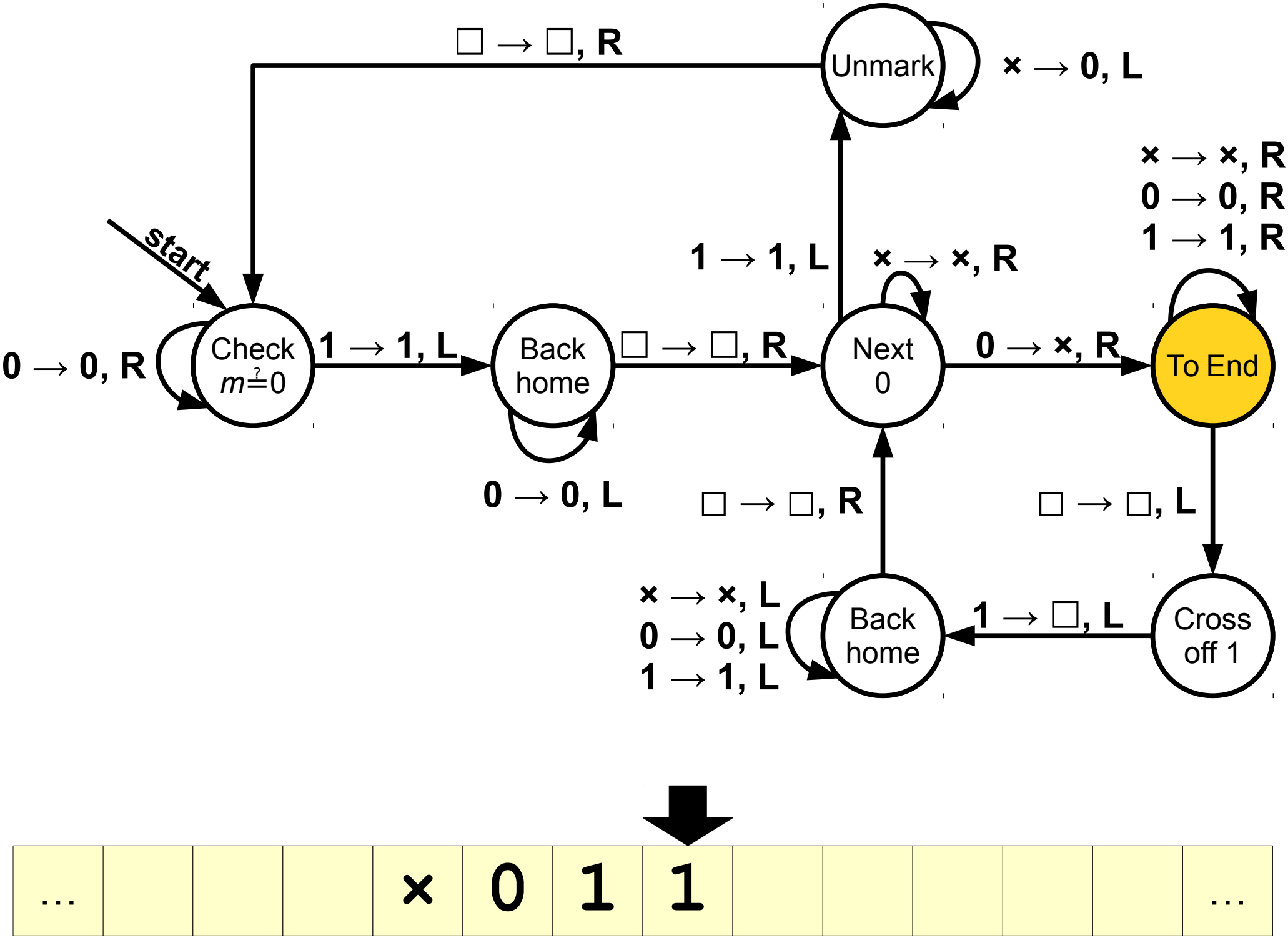
start
Check
m ?= 0
0 → 0, R
1 → 1, L
Back
home
0 → 0, L
□ → □, R
Next
0
1 → 1, L
× → ×, R
0 → ×, R
To End
× → ×, R
0 → 0, R
1 → 1, R
□ → □, L
Cross
off 1
1 → □, L
Back
home
× → ×, L
0 → 0, L
1 → 1, L
□ → □, R
Unmark
× → 0, L
□ → □, R
…
×
0
1
1
…

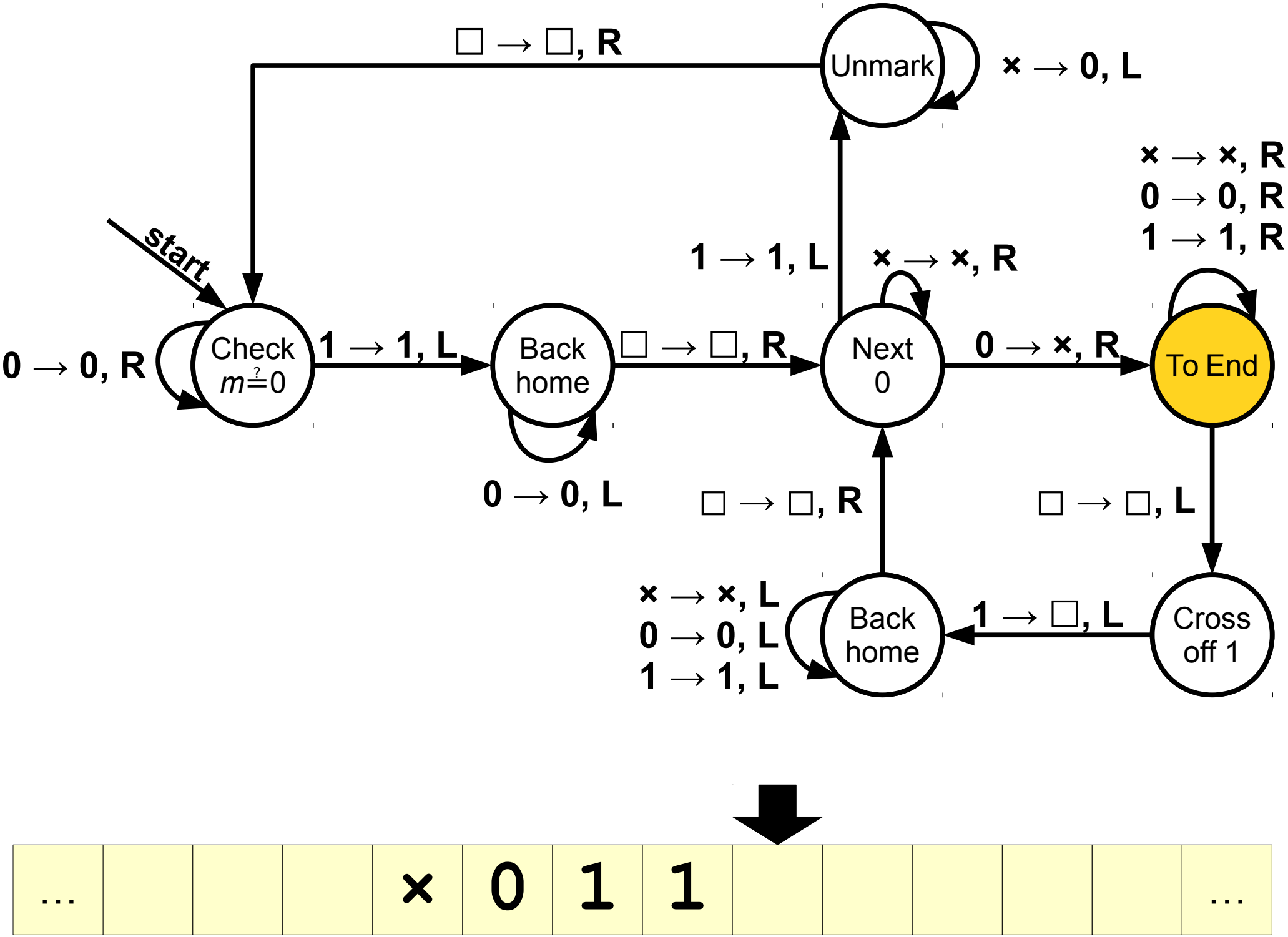
start
Check
m ?= 0
0 → 0, R
1 → 1, L
Back
home
0 → 0, L
□ → □, R
Next
0
1 → 1, L
× → ×, R
0 → ×, R
Unmark
× → 0, L
□ → □, R
To End
× → ×, R
0 → 0, R
1 → 1, R
□ → □, L
Cross
off 1
1 → □, L
Back
home
× → ×, L
0 → 0, L
1 → 1, L
□ → □, R
…
×
0
1
1
…

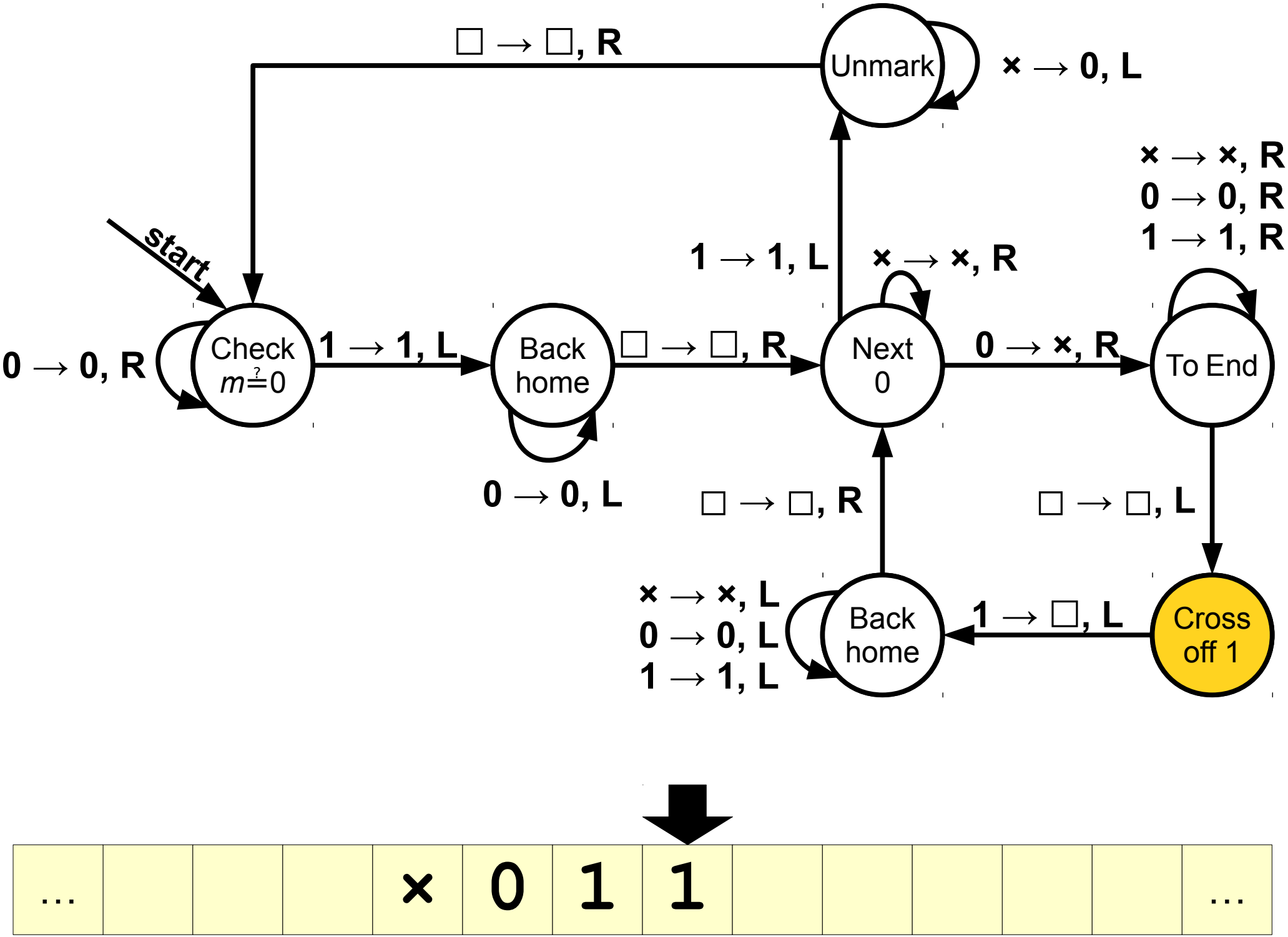
start
Check
m=?0
0 → 0, R
1 → 1, L
Back
home
0 → 0, L
□ → □, R
Next
0
1 → 1, L
× → ×, R
0 → ×, R
Unmark
× → 0, L
□ → □, R
To End
× → ×, R
0 → 0, R
1 → 1, R
□ → □, L
Cross
off 1
1 → □, L
Back
home
× → ×, L
0 → 0, L
1 → 1, L
□ → □, R
…
×
0
1
1
…

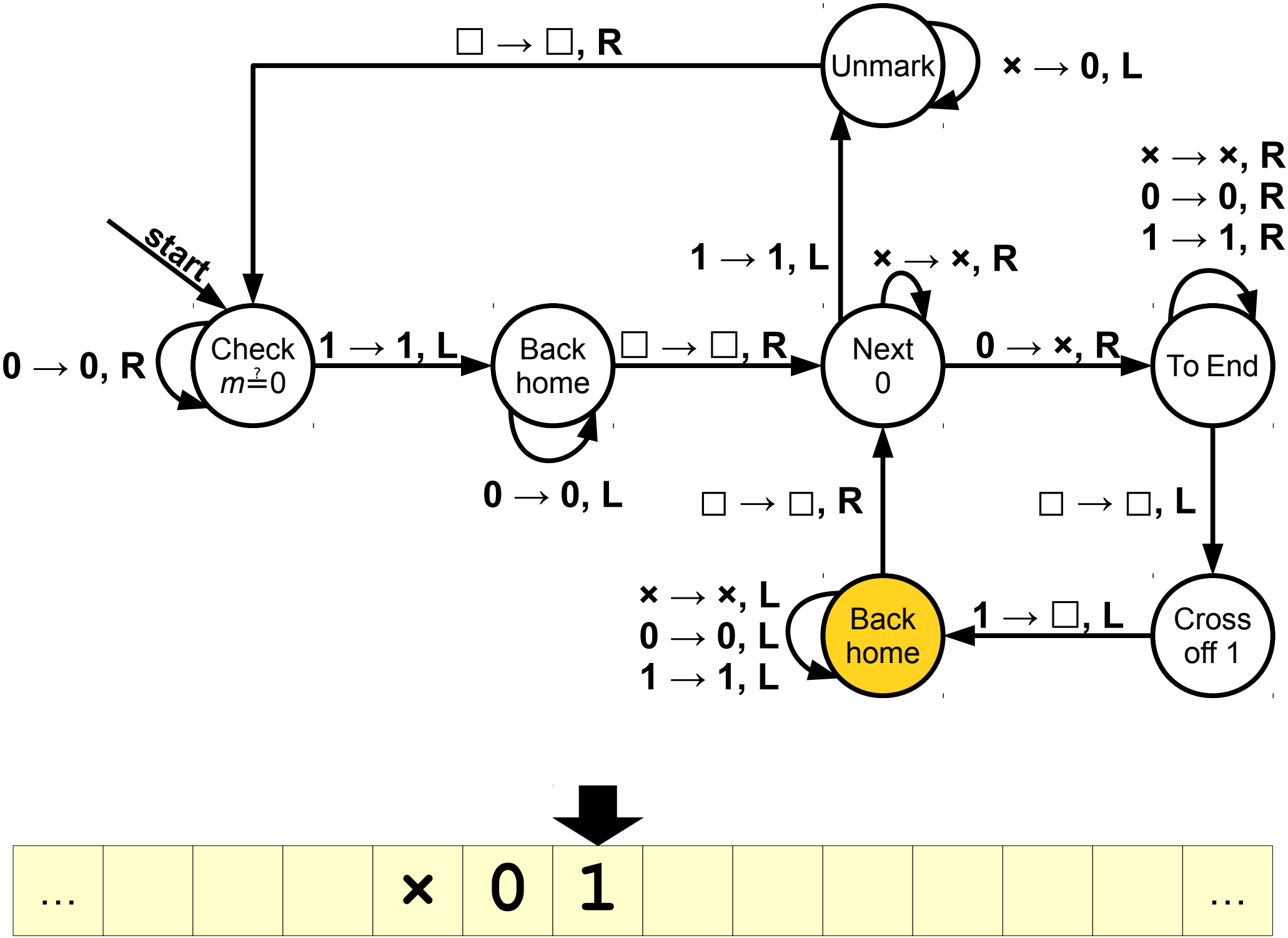
start
Check
m ?= 0
0 → 0, R
1 → 1, L
Back
home
0 → 0, L
□ → □, R
Next
0
1 → 1, L
× → ×, R
0 → ×, R
Unmark
× → 0, L
□ → □, R
To End
× → ×, R
0 → 0, R
1 → 1, R
□ → □, L
Cross
off 1
1 → □, L
Back
home
× → ×, L
0 → 0, L
1 → 1, L
□ → □, R
…
×
0
1
…

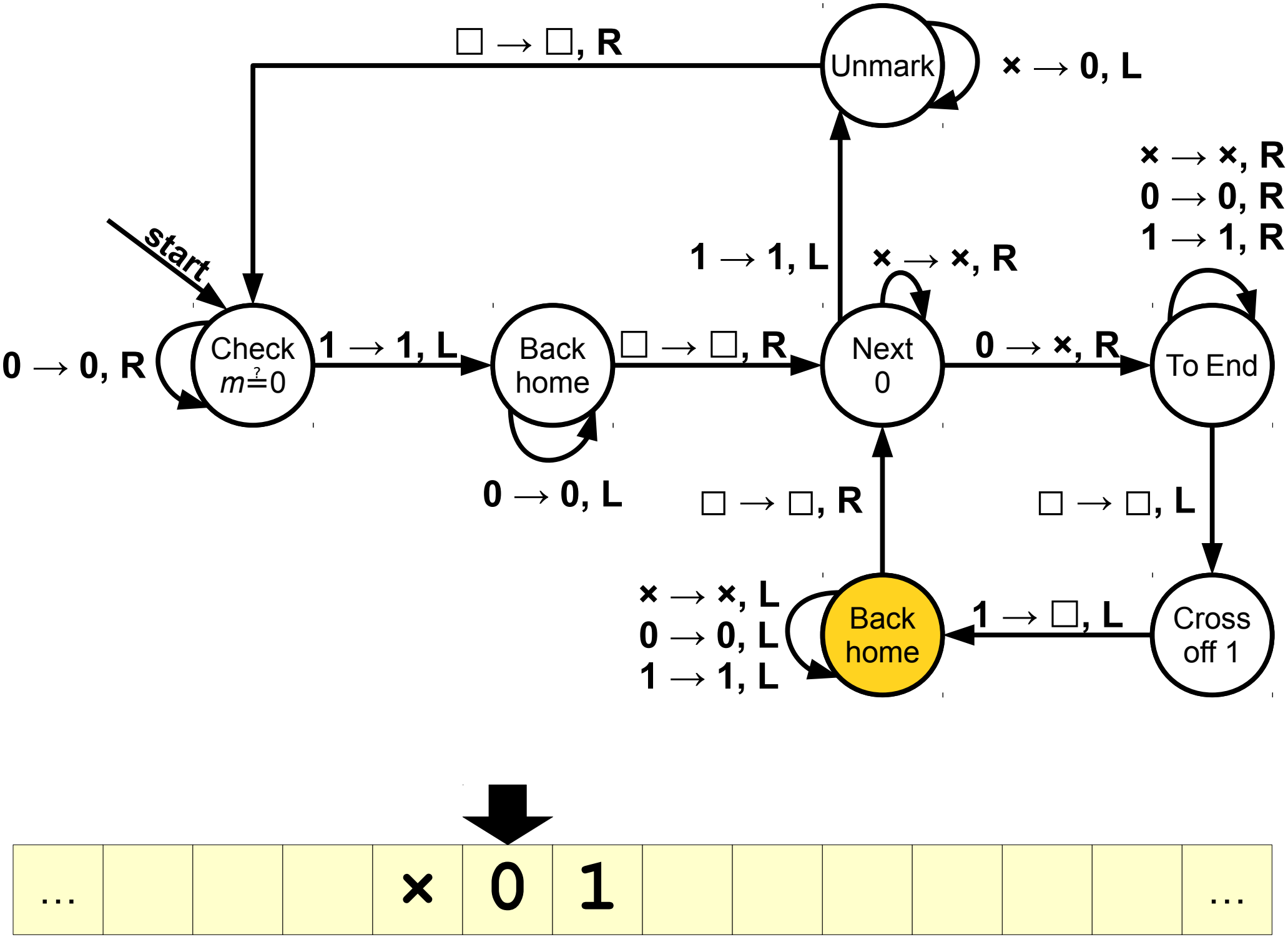
start
Check
m ?= 0
0 → 0, R
1 → 1, L
Back
home
0 → 0, L
□ → □, R
Next
0
1 → 1, L
× → ×, R
0 → ×, R
To End
× → ×, R
0 → 0, R
1 → 1, R
□ → □, L
Cross
off 1
1 → □, L
Back
home
× → ×, L
0 → 0, L
1 → 1, L
□ → □, R
Unmark
× → 0, L
□ → □, R
…
×
0
1
…

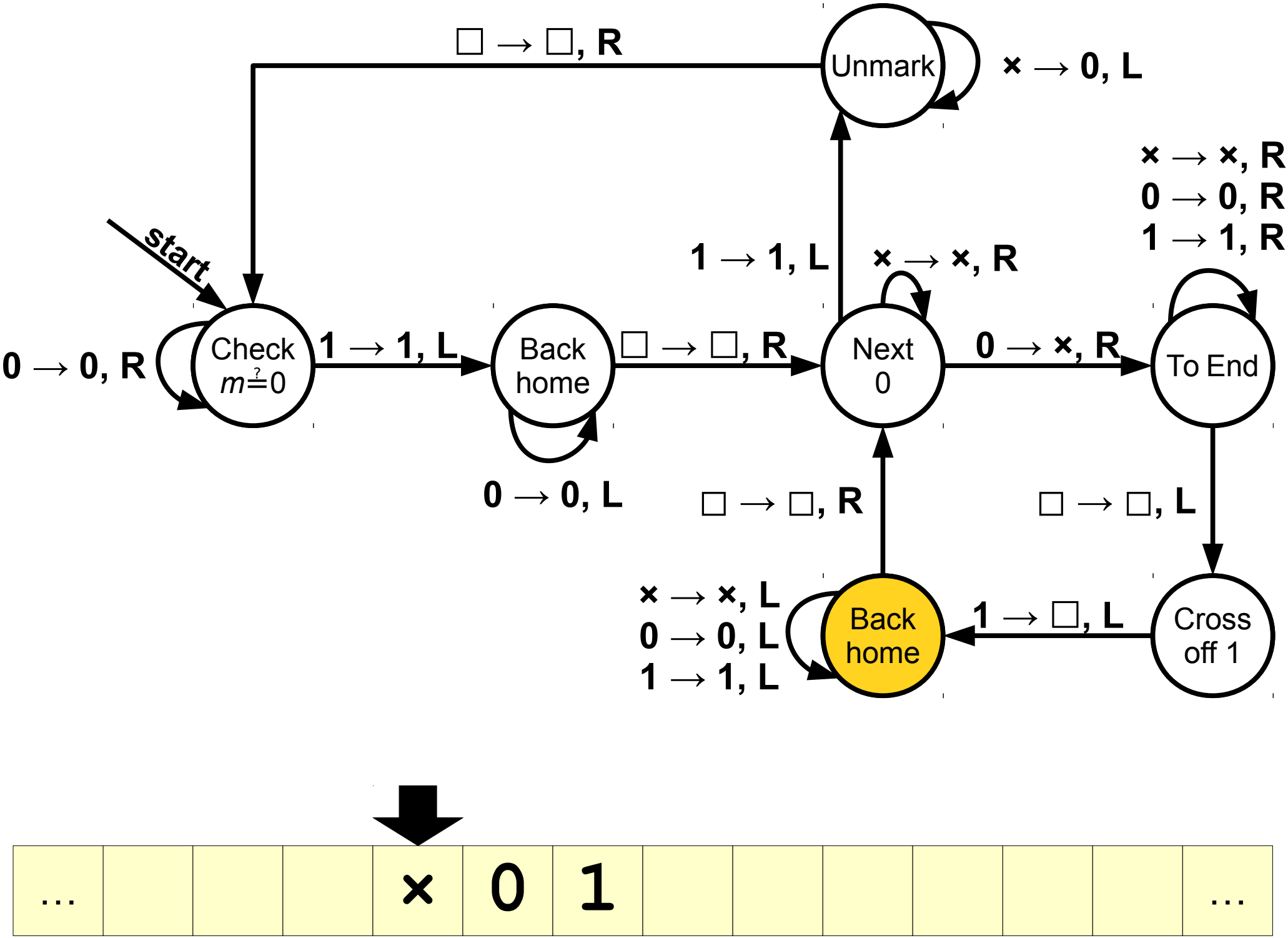
start
Check
m ?= 0
0 → 0, R
1 → 1, L
Back
home
0 → 0, L
□ → □, R
Next
0
1 → 1, L
× → ×, R
0 → ×, R
Unmark
× → 0, L
□ → □, R
To End
× → ×, R
0 → 0, R
1 → 1, R
□ → □, L
Cross
off 1
1 → □, L
Back
home
× → ×, L
0 → 0, L
1 → 1, L
□ → □, R
…
×
0
1
…

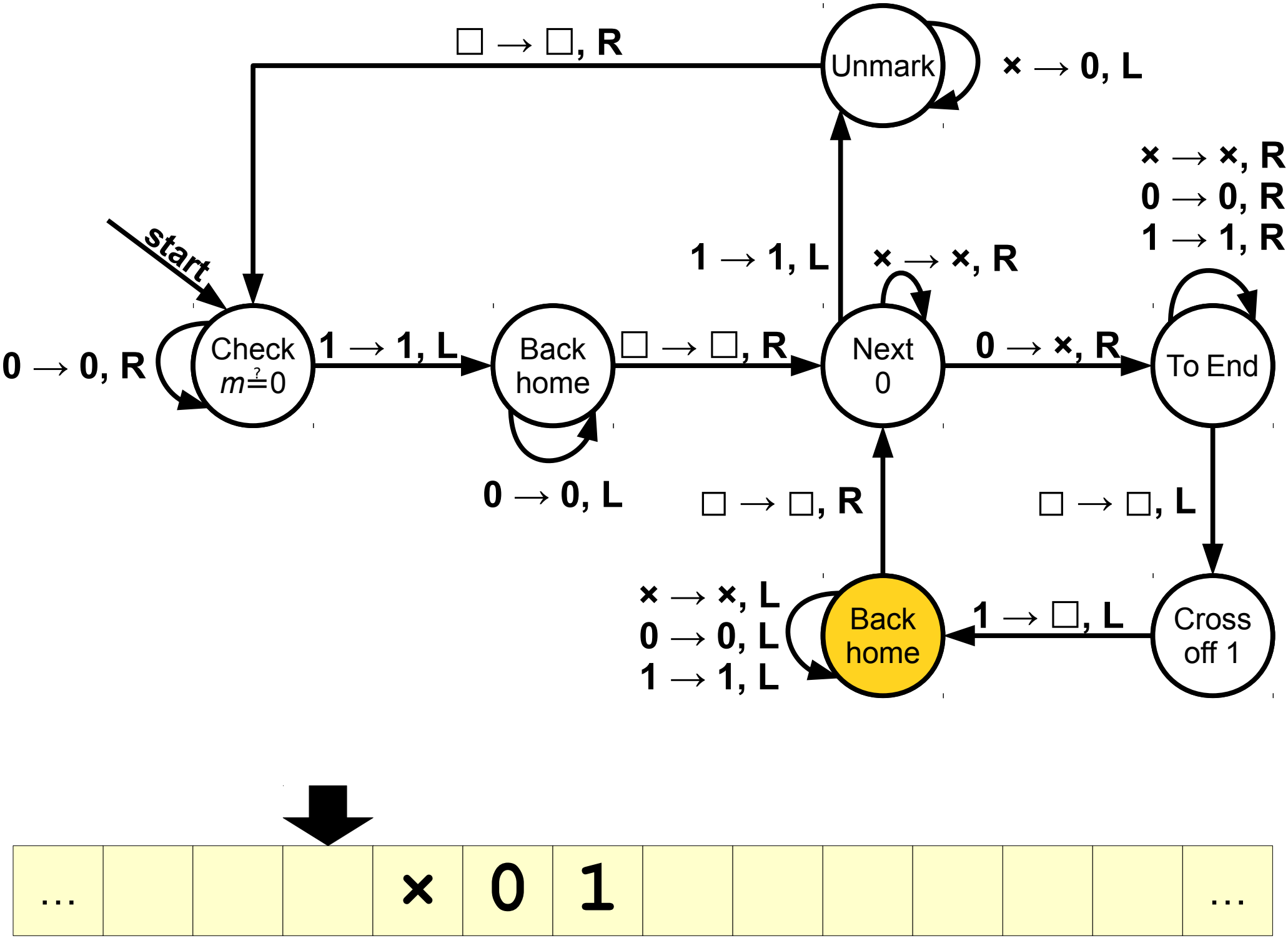
start
Check
m ?= 0
0 → 0, R
1 → 1, L
Back
home
0 → 0, L
□ → □, R
Next
0
1 → 1, L
× → ×, R
0 → ×, R
Unmark
× → 0, L
□ → □, R
To End
× → ×, R
0 → 0, R
1 → 1, R
□ → □, L
Cross
off 1
1 → □, L
Back
home
× → ×, L
0 → 0, L
1 → 1, L
□ → □, R
…
×
0
1
…

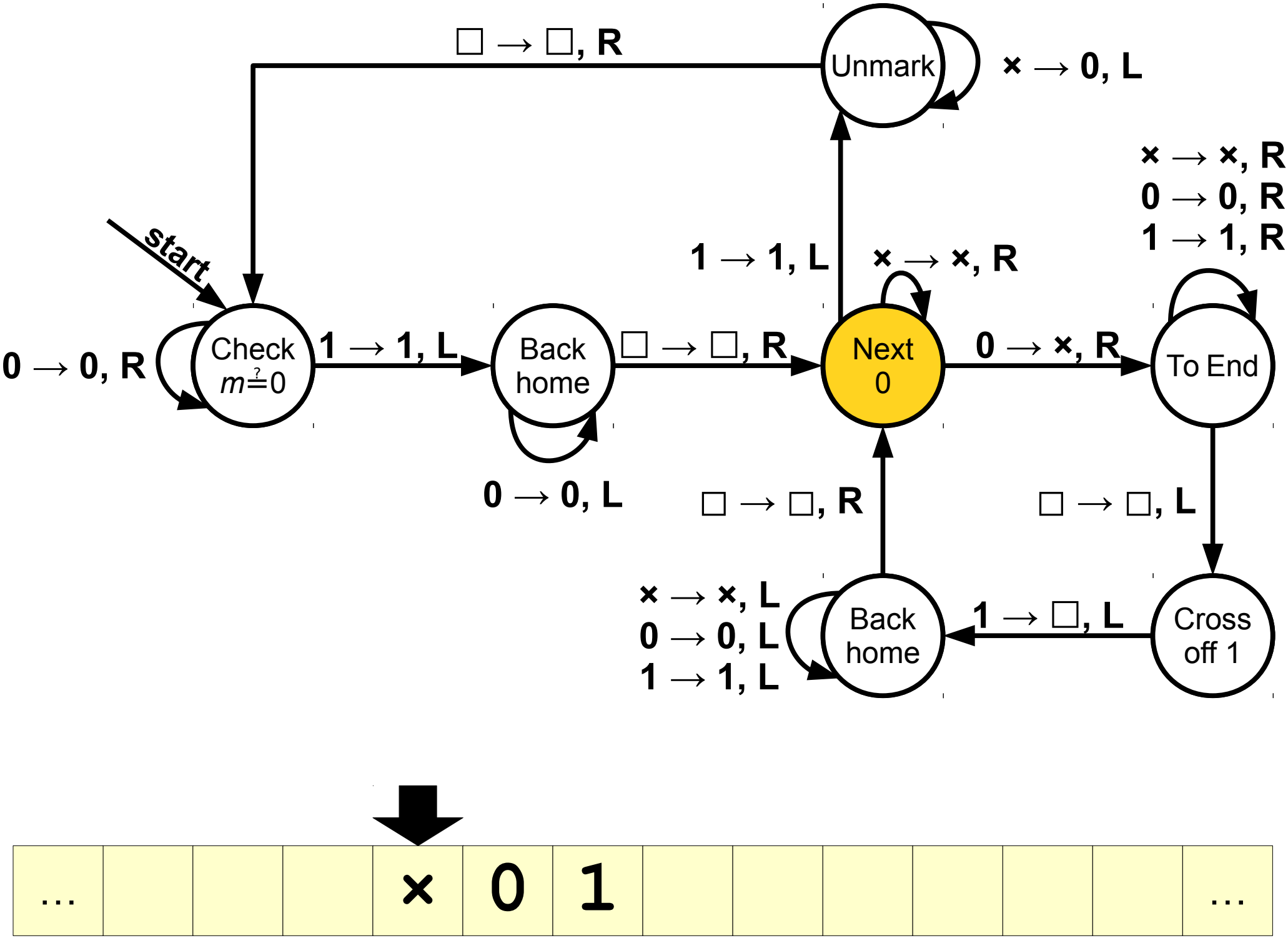
Unmark
□ → □, R
× → 0, L
× → ×, R
0 → 0, R
1 → 1, R
start
1 → 1, L
× → ×, R
Check
m=?0
0 → 0, R
1 → 1, L
Back
home
□ → □, R
Next
0
0 → ×, R
To End
0 → 0, L
□ → □, R
□ → □, L
× → ×, L
0 → 0, L
1 → 1, L
Back
home
1 → □, L
Cross
off 1
…
×
0
1
…

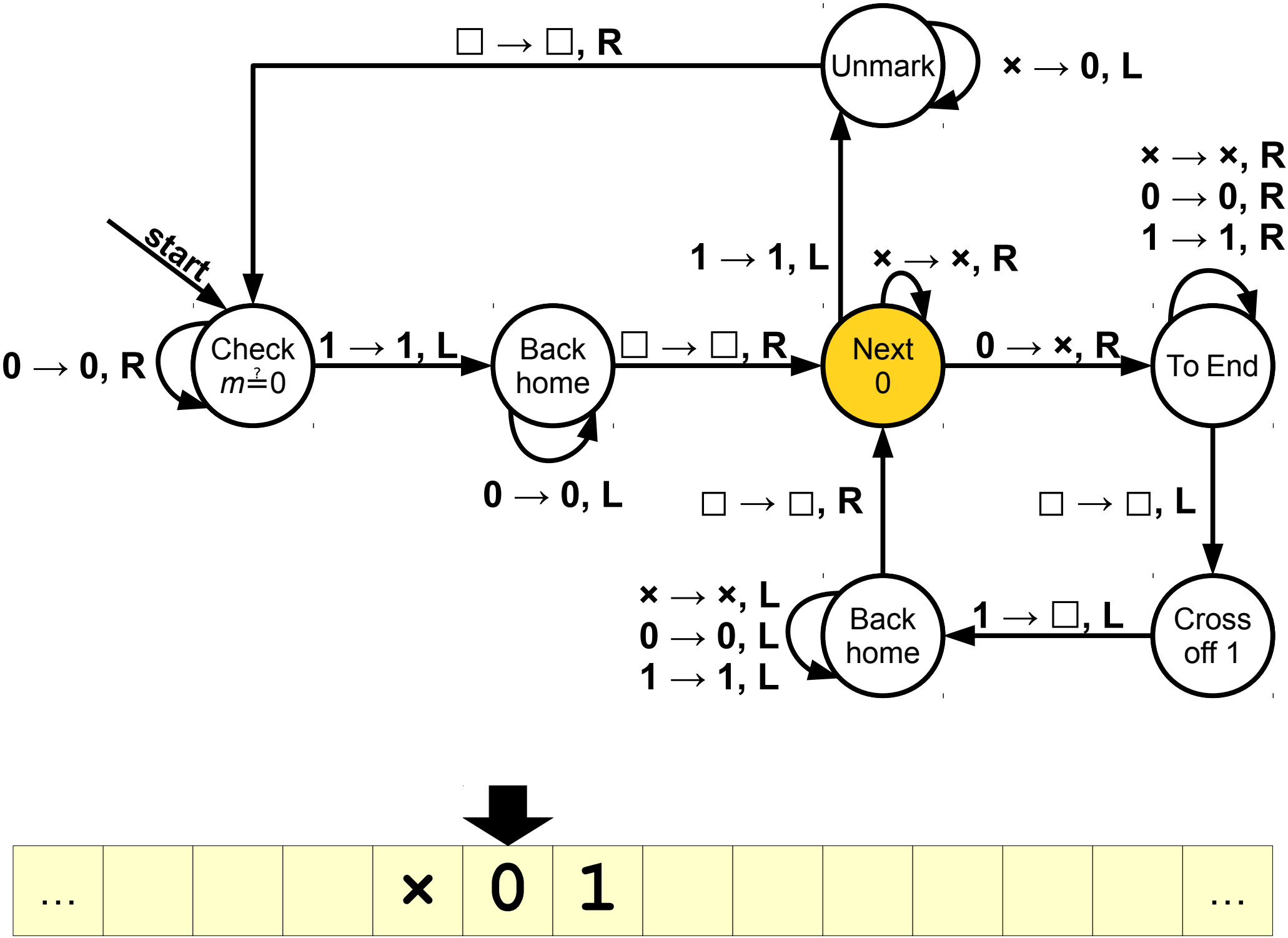
start
Check
m ≟ 0
0 → 0, R
1 → 1, L
Back
home
0 → 0, L
□ → □, R
Next
0
1 → 1, L
× → ×, R
0 → ×, R
Unmark
□ → □, R
× → 0, L
To End
× → ×, R
0 → 0, R
1 → 1, R
□ → □, L
Cross
off 1
1 → □, L
Back
home
× → ×, L
0 → 0, L
1 → 1, L
□ → □, R
…
×
0
1
…

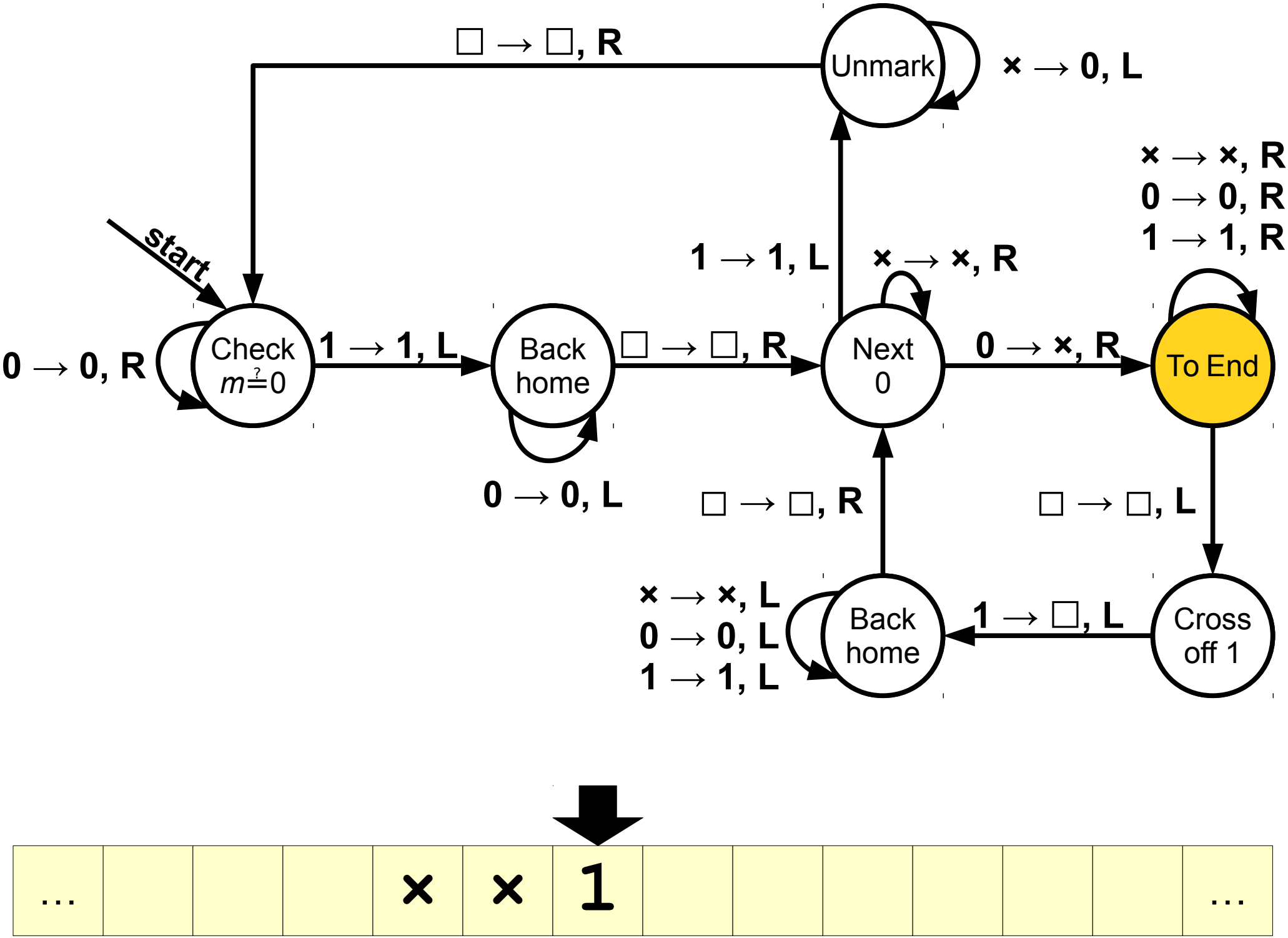
start
Check
m ?= 0
0 → 0, R
1 → 1, L
Back
home
0 → 0, L
□ → □, R
Next
0
1 → 1, L
× → ×, R
0 → ×, R
Unmark
× → 0, L
□ → □, R
To End
× → ×, R
0 → 0, R
1 → 1, R
□ → □, L
Cross
off 1
1 → □, L
Back
home
× → ×, L
0 → 0, L
1 → 1, L
□ → □, R
…
×
×
1
…

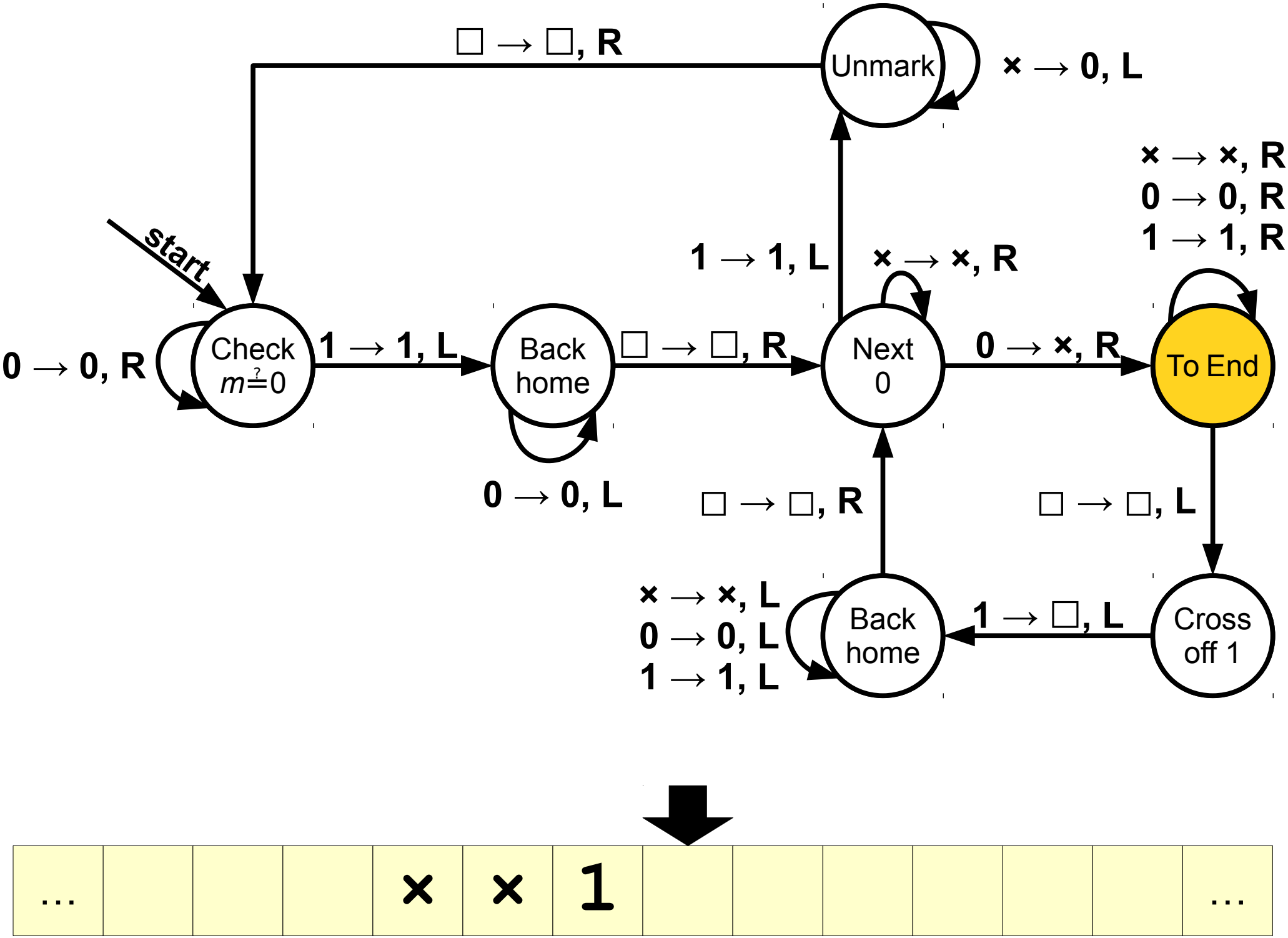
start
Check
m ?= 0
0 → 0, R
1 → 1, L
Back
home
0 → 0, L
□ → □, R
Next
0
1 → 1, L
× → ×, R
0 → ×, R
Unmark
× → 0, L
□ → □, R
To End
× → ×, R
0 → 0, R
1 → 1, R
□ → □, L
Cross
off 1
1 → □, L
Back
home
× → ×, L
0 → 0, L
1 → 1, L
□ → □, R
…
×
×
1
…

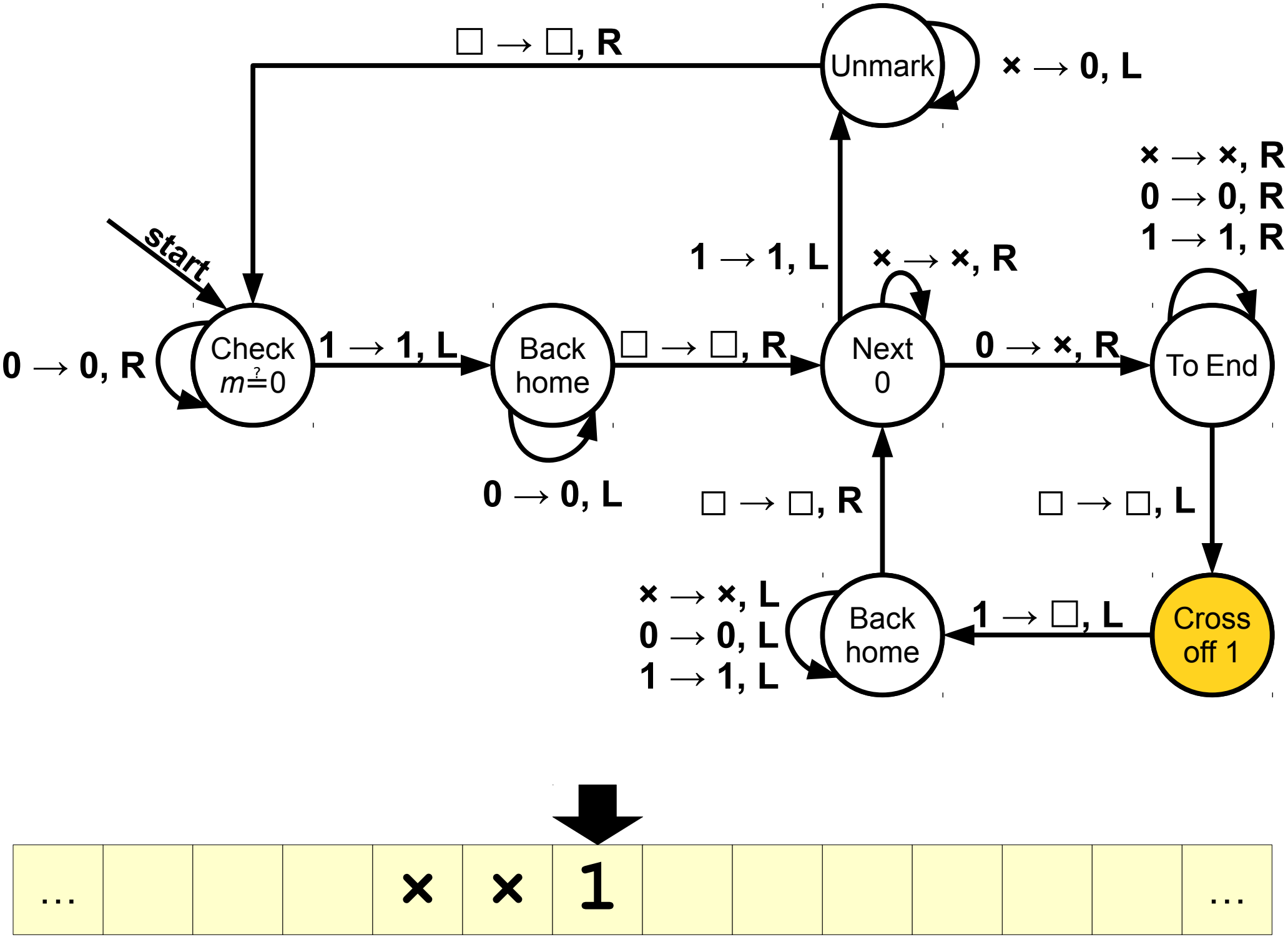
start
Check
m ?= 0
0 → 0, R
1 → 1, L
Back
home
0 → 0, L
□ → □, R
Next
0
1 → 1, L
× → ×, R
0 → ×, R
Unmark
× → 0, L
□ → □, R
To End
× → ×, R
0 → 0, R
1 → 1, R
□ → □, L
Cross
off 1
1 → □, L
Back
home
× → ×, L
0 → 0, L
1 → 1, L
□ → □, R
…
×
×
1
…

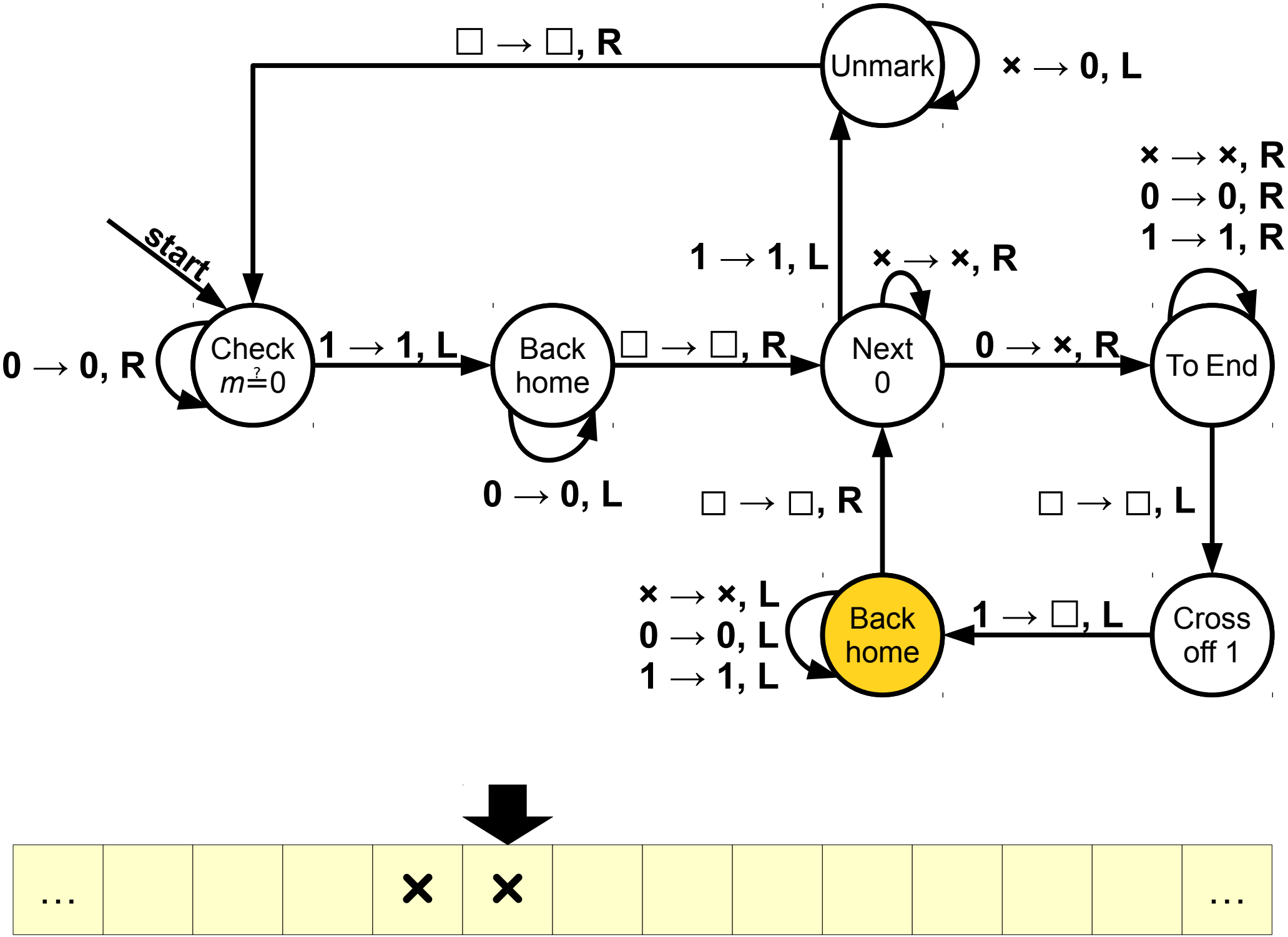
start
Check
m ?= 0
0 → 0, R
1 → 1, L
Back
home
0 → 0, L
□ → □, R
Next
0
1 → 1, L
× → ×, R
0 → ×, R
To End
× → ×, R
0 → 0, R
1 → 1, R
□ → □, L
Cross
off 1
1 → □, L
Back
home
× → ×, L
0 → 0, L
1 → 1, L
□ → □, R
Unmark
× → 0, L
□ → □, R
…
×
×
…

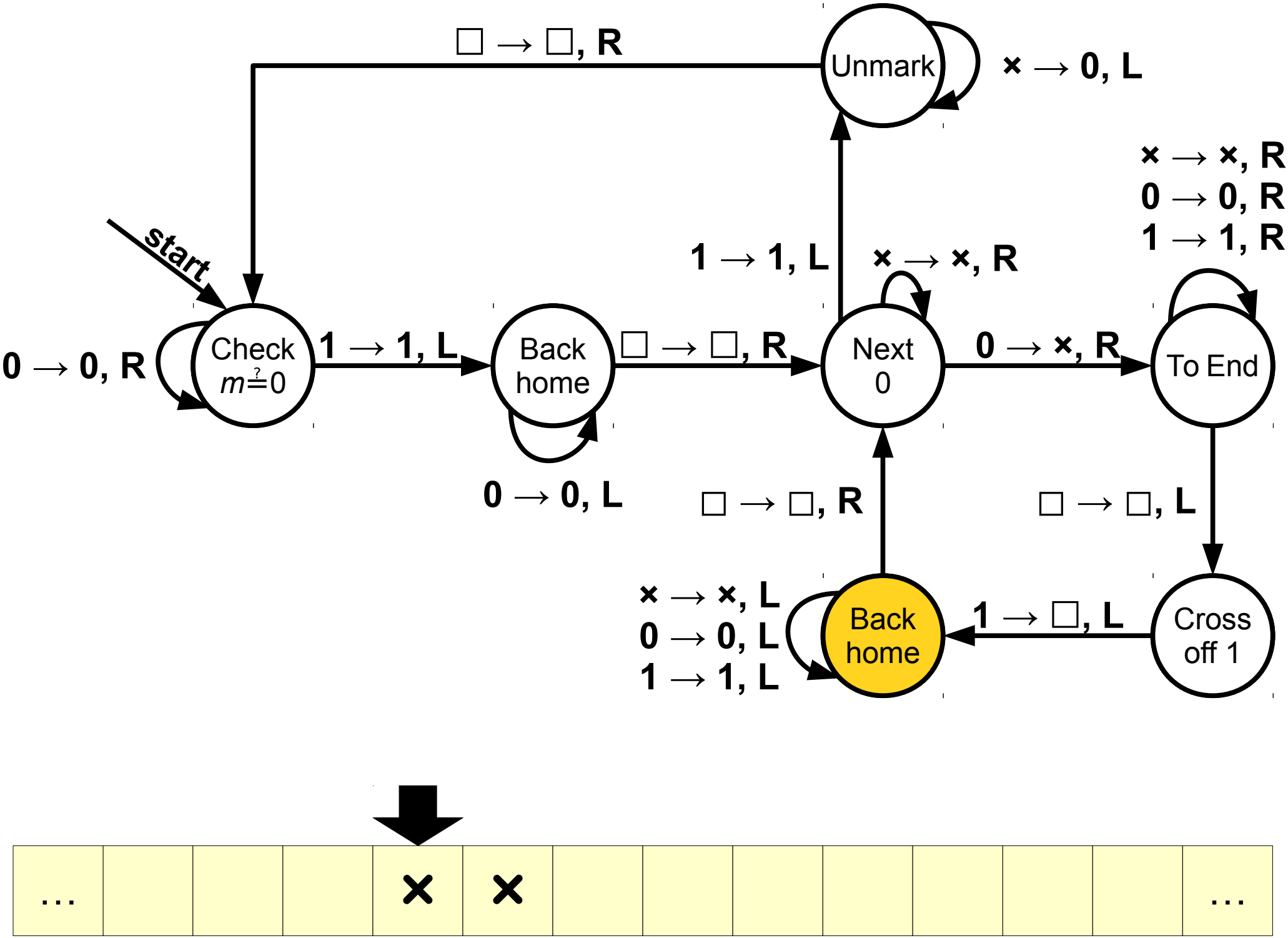
start
Check
m ?= 0
0 → 0, R
1 → 1, L
Back
home
0 → 0, L
□ → □, R
Next
0
1 → 1, L
× → ×, R
0 → ×, R
To End
× → ×, R
0 → 0, R
1 → 1, R
□ → □, L
Cross
off 1
1 → □, L
Back
home
× → ×, L
0 → 0, L
1 → 1, L
□ → □, R
Unmark
× → 0, L
□ → □, R
…
×
×
…

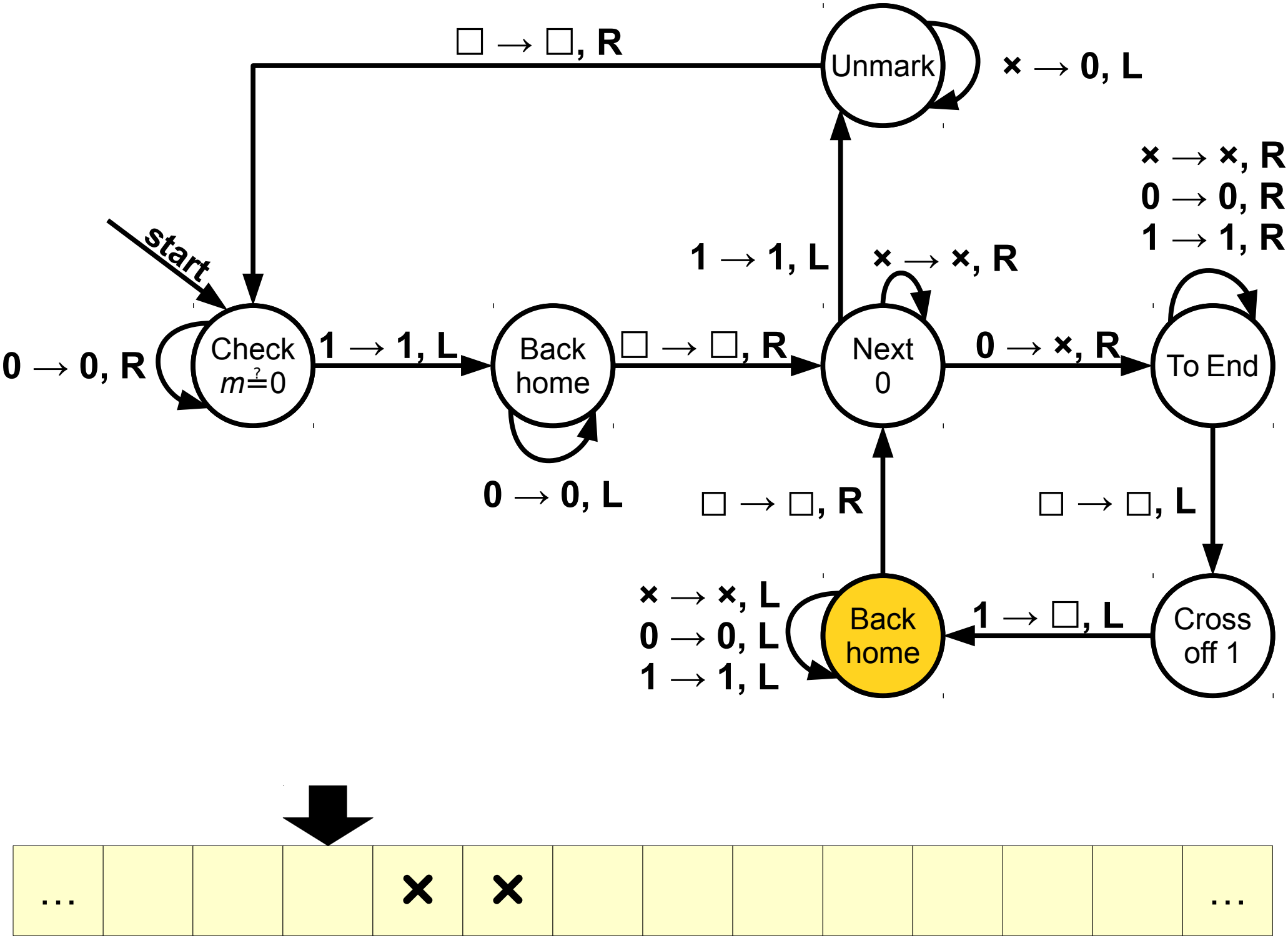
Unmark
□ → □, R
× → 0, L
× → ×, R
0 → 0, R
1 → 1, R
start
1 → 1, L
× → ×, R
Check
m ?= 0
0 → 0, R
1 → 1, L
Back
home
□ → □, R
Next
0
0 → ×, R
To End
0 → 0, L
□ → □, R
□ → □, L
× → ×, L
0 → 0, L
1 → 1, L
Back
home
1 → □, L
Cross
off 1
…
×
×
…

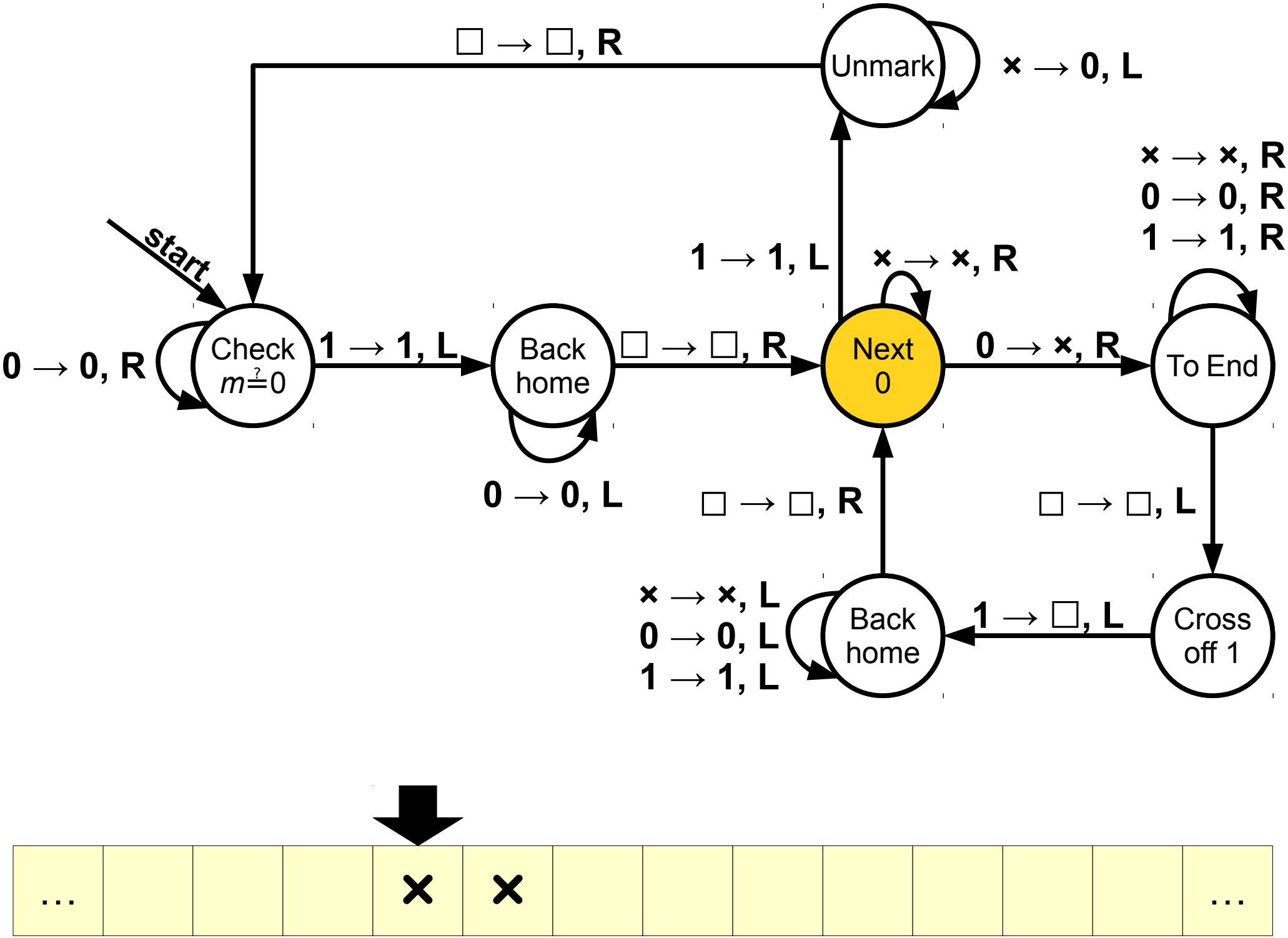
start
Check
m ?= 0
0 → 0, R
1 → 1, L
Back
home
0 → 0, L
□ → □, R
Next
0
1 → 1, L
× → ×, R
0 → ×, R
To End
× → ×, R
0 → 0, R
1 → 1, R
□ → □, L
Cross
off 1
1 → □, L
Back
home
× → ×, L
0 → 0, L
1 → 1, L
□ → □, R
Unmark
× → 0, L
□ → □, R
…
×
×
…

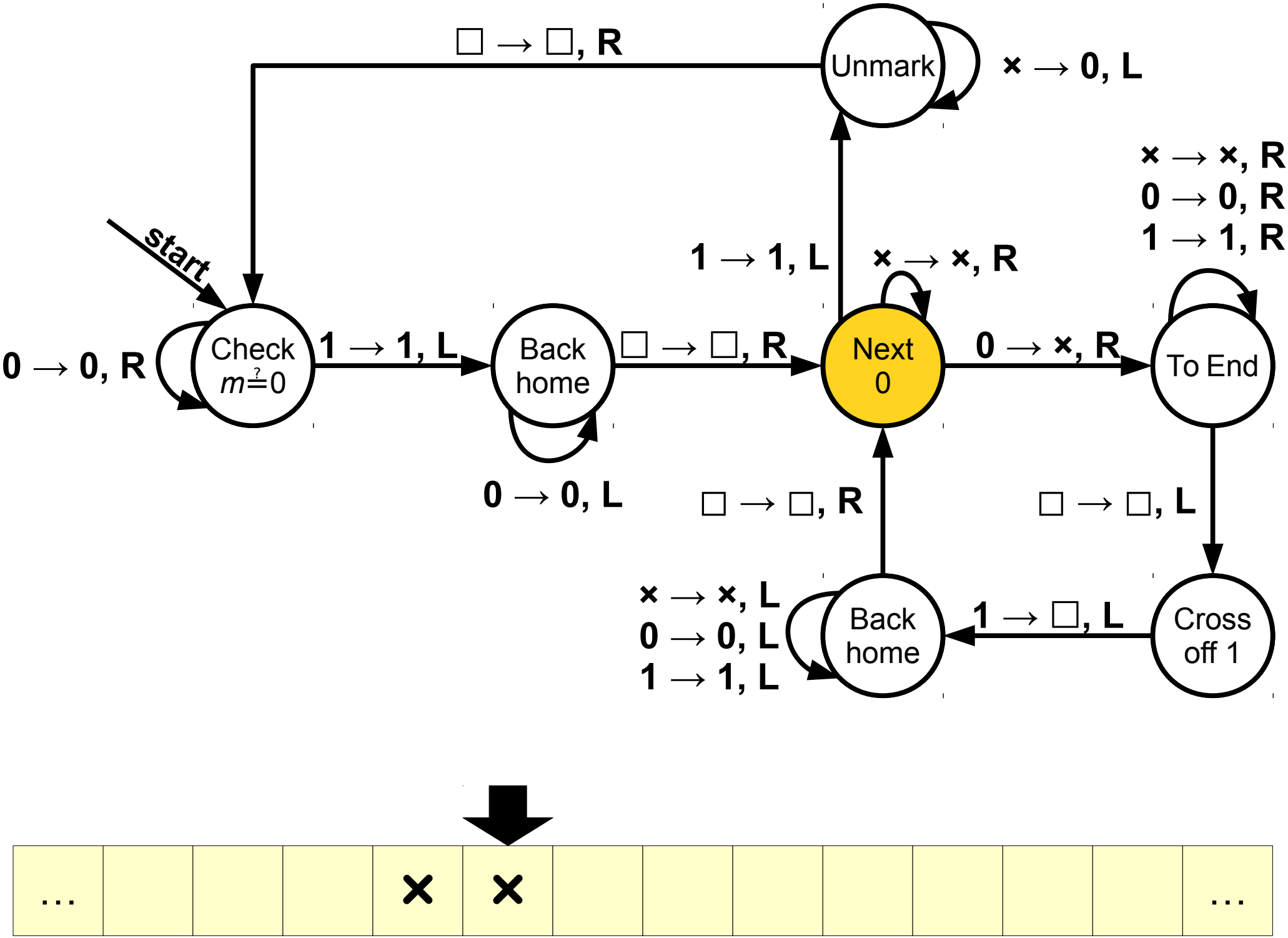
start
Check
m ?= 0
0 → 0, R
1 → 1, L
Back
home
0 → 0, L
□ → □, R
Next
0
1 → 1, L
× → ×, R
0 → ×, R
Unmark
× → 0, L
□ → □, R
To End
× → ×, R
0 → 0, R
1 → 1, R
□ → □, L
Cross
off 1
1 → □, L
Back
home
× → ×, L
0 → 0, L
1 → 1, L
□ → □, R
…
×
×
…

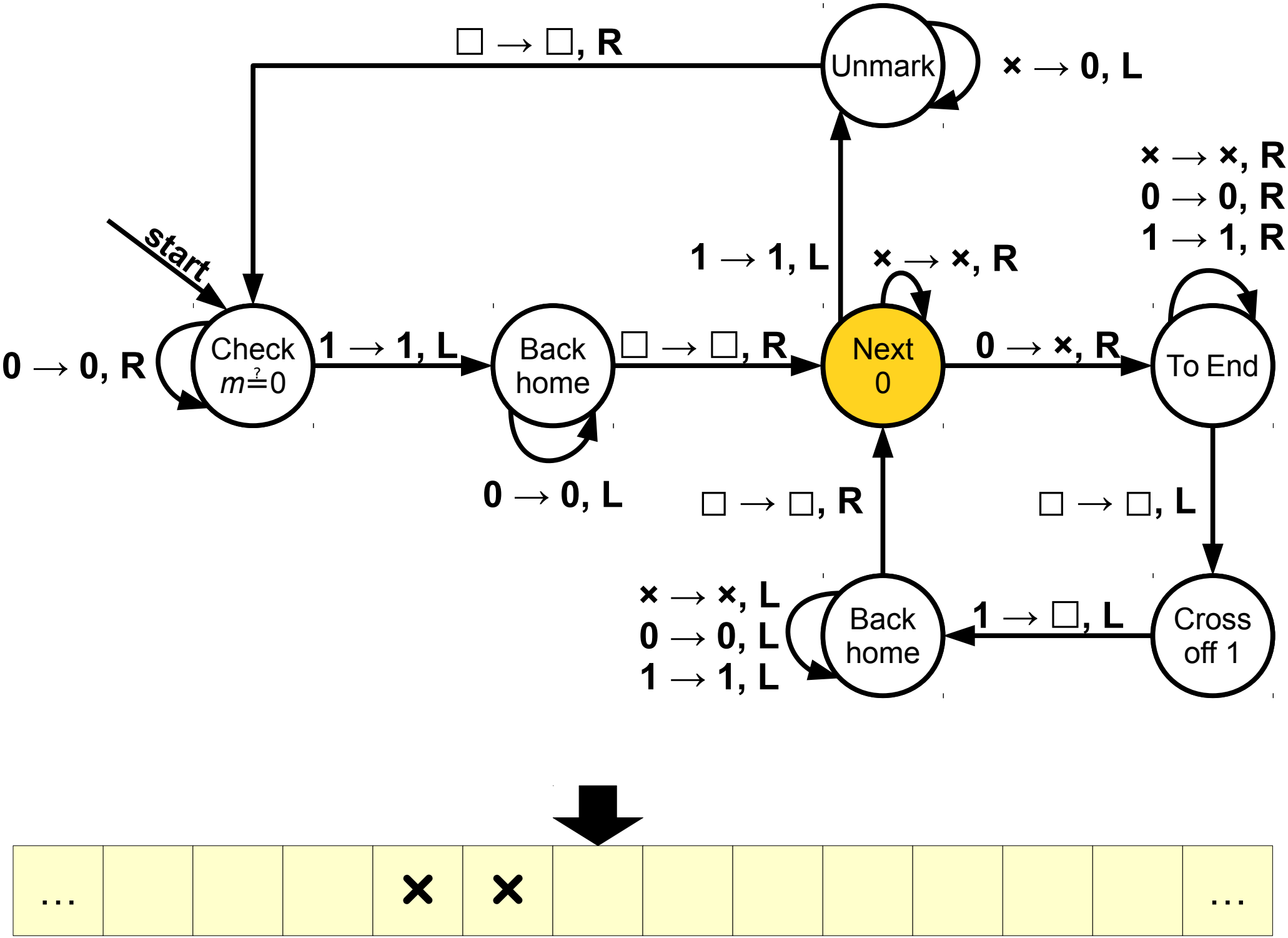
start
Check
m ?= 0
0 → 0, R
1 → 1, L
Back
home
0 → 0, L
□ → □, R
Next
0
1 → 1, L
× → ×, R
0 → ×, R
To End
× → ×, R
0 → 0, R
1 → 1, R
□ → □, L
Cross
off 1
1 → □, L
Back
home
× → ×, L
0 → 0, L
1 → 1, L
□ → □, R
Unmark
× → 0, L
□ → □, R
…
×
×
…

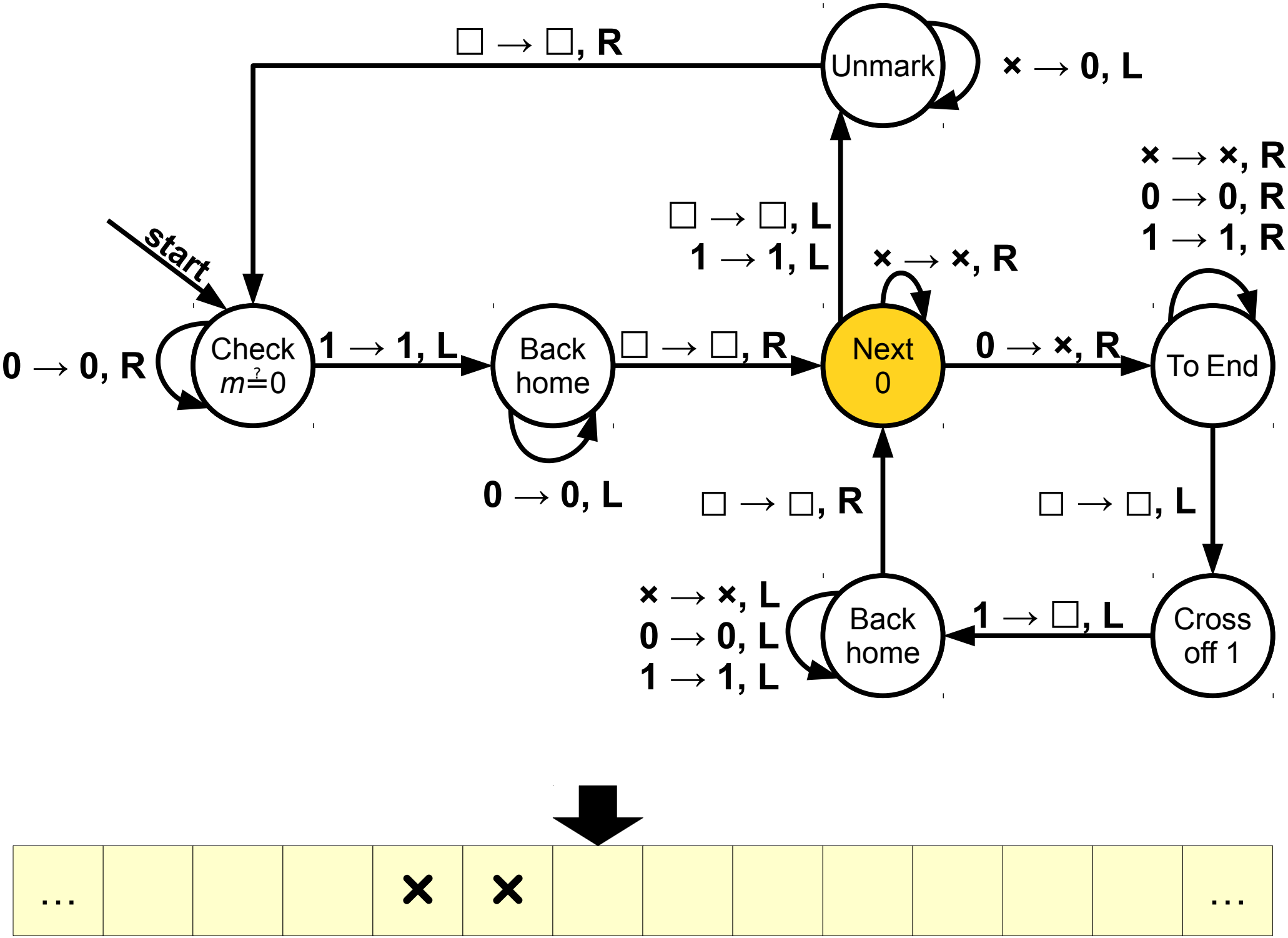
start
Check
m ?= 0
0 → 0, R
1 → 1, L
Back
home
0 → 0, L
□ → □, R
Next
0
× → ×, R
0 → ×, R
To End
× → ×, R
0 → 0, R
1 → 1, R
□ → □, L
Cross
off 1
1 → □, L
Back
home
× → ×, L
0 → 0, L
1 → 1, L
□ → □, R
□ → □, L
1 → 1, L
Unmark
× → 0, L
□ → □, R
…
×
×
…

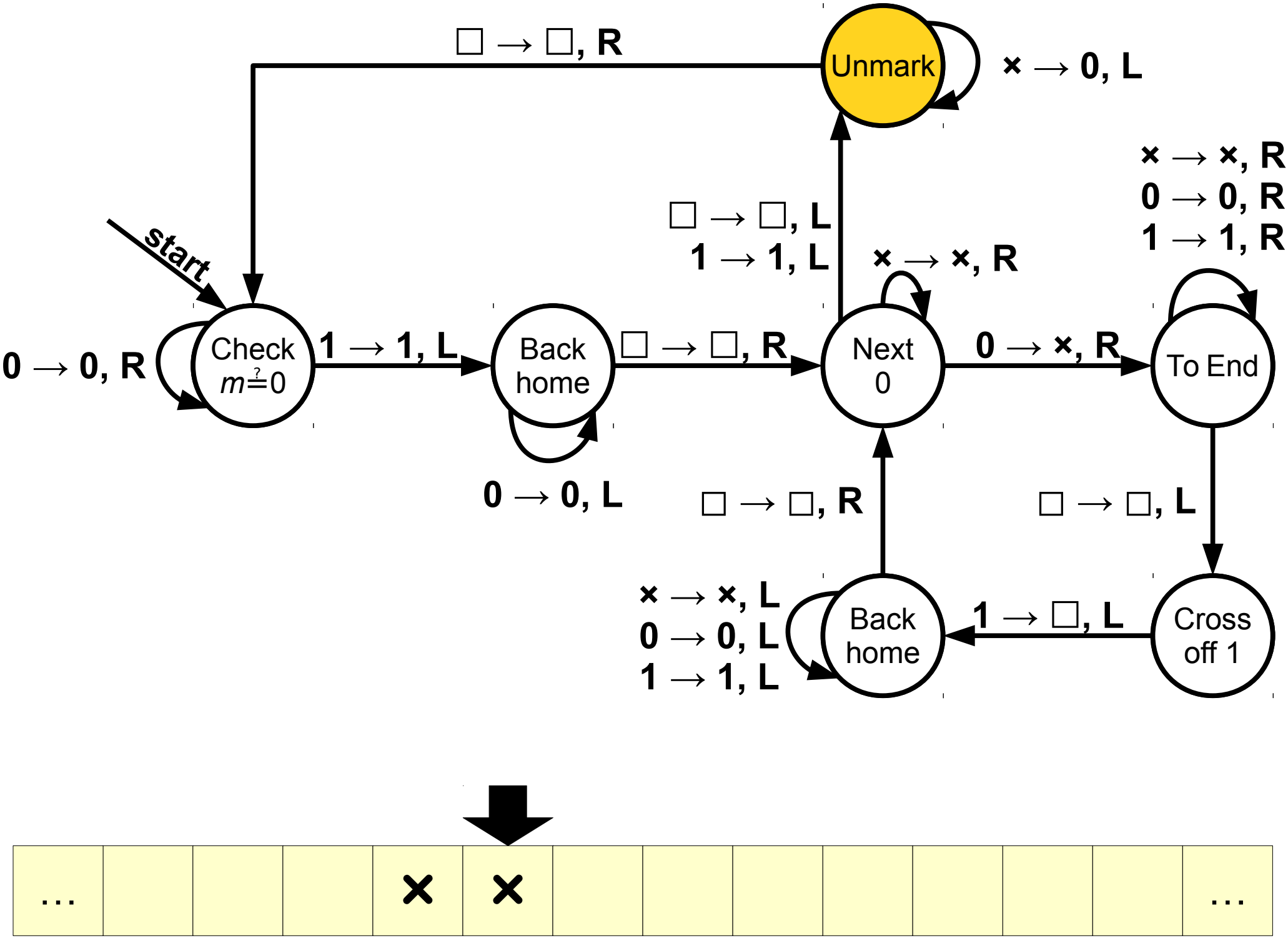
Unmark
□ → □, R
× → 0, L
start
Check
m ?= 0
0 → 0, R
1 → 1, L
Back
home
0 → 0, L
□ → □, R
Next
0
× → ×, R
□ → □, L
1 → 1, L
0 → ×, R
To End
× → ×, R
0 → 0, R
1 → 1, R
□ → □, R
□ → □, L
Back
home
× → ×, L
0 → 0, L
1 → 1, L
1 → □, L
Cross
off 1
…
×
×
…

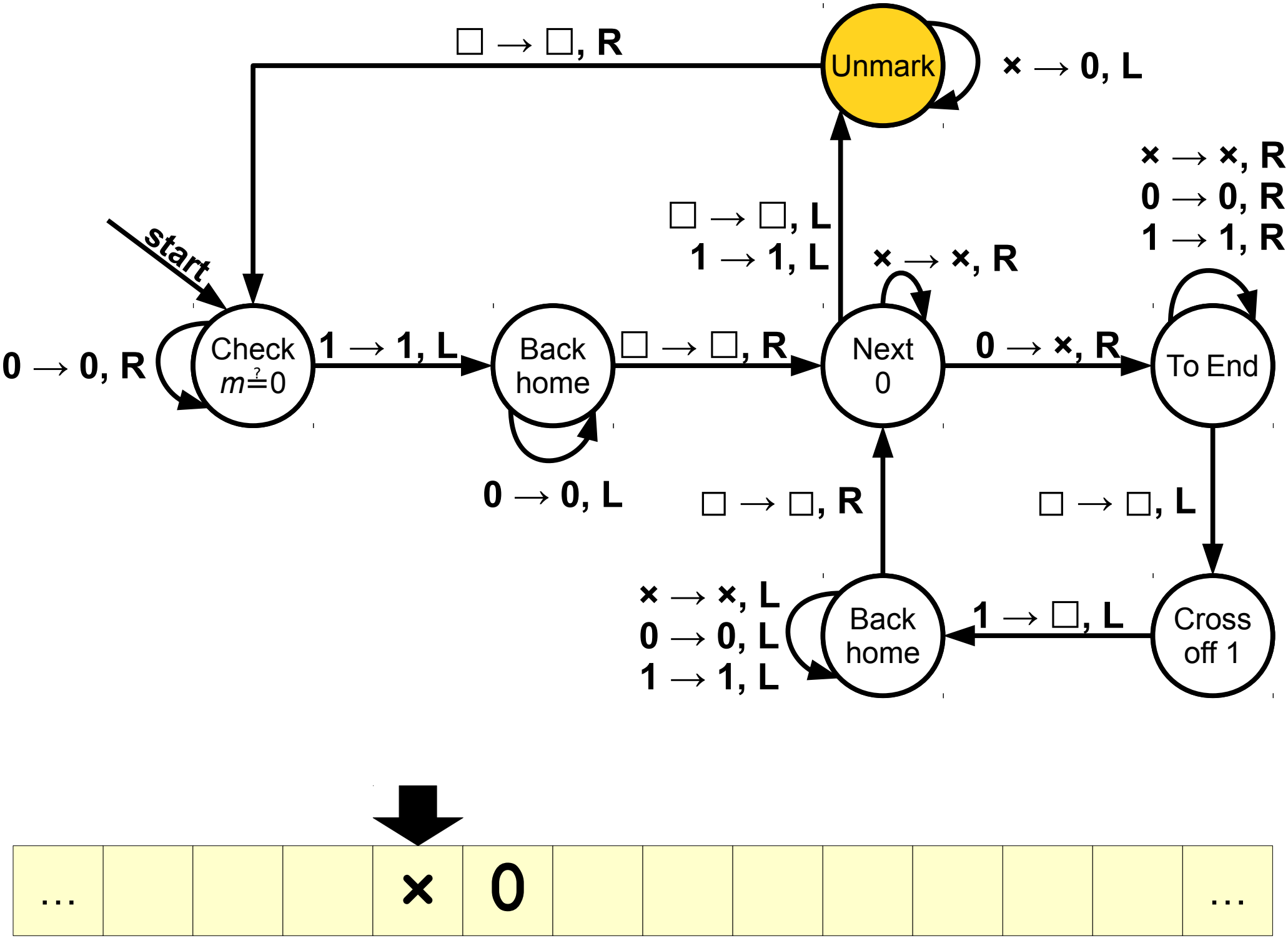
Unmark
□ → □, R
× → 0, L
start
Check
m=?0
0 → 0, R
1 → 1, L
Back
home
0 → 0, L
□ → □, R
Next
0
□ → □, L
1 → 1, L
× → ×, R
0 → ×, R
To End
× → ×, R
0 → 0, R
1 → 1, R
□ → □, L
Cross
off 1
1 → □, L
Back
home
× → ×, L
0 → 0, L
1 → 1, L
□ → □, R
…
×
0
…

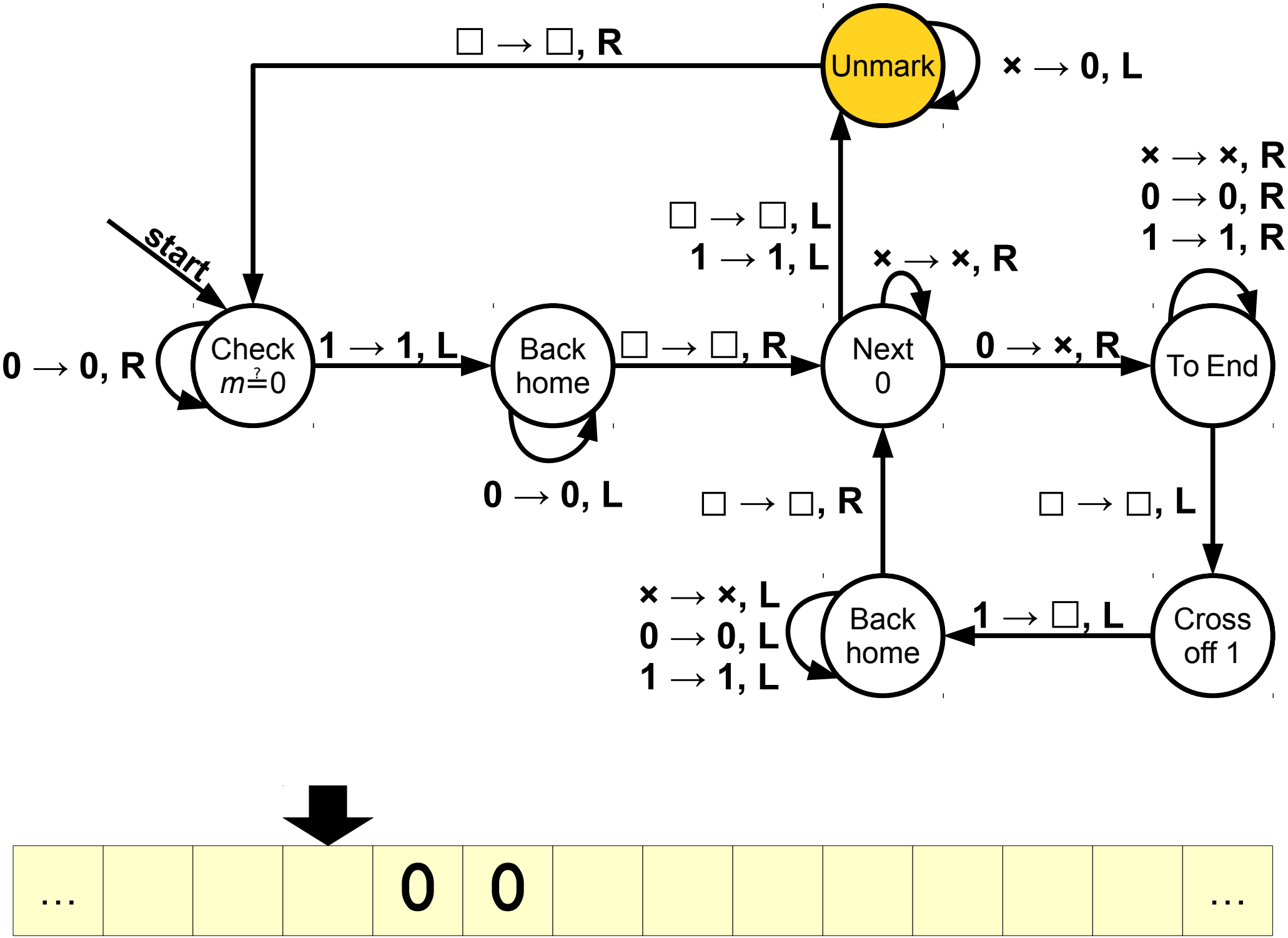
Unmark
□ → □, R
× → 0, L
start
Check
m ?= 0
0 → 0, R
1 → 1, L
Back
home
0 → 0, L
□ → □, R
Next
0
□ → □, L
1 → 1, L
× → ×, R
0 → ×, R
To End
× → ×, R
0 → 0, R
1 → 1, R
□ → □, L
Cross
off 1
1 → □, L
Back
home
□ → □, R
× → ×, L
0 → 0, L
1 → 1, L
…
0
0
…

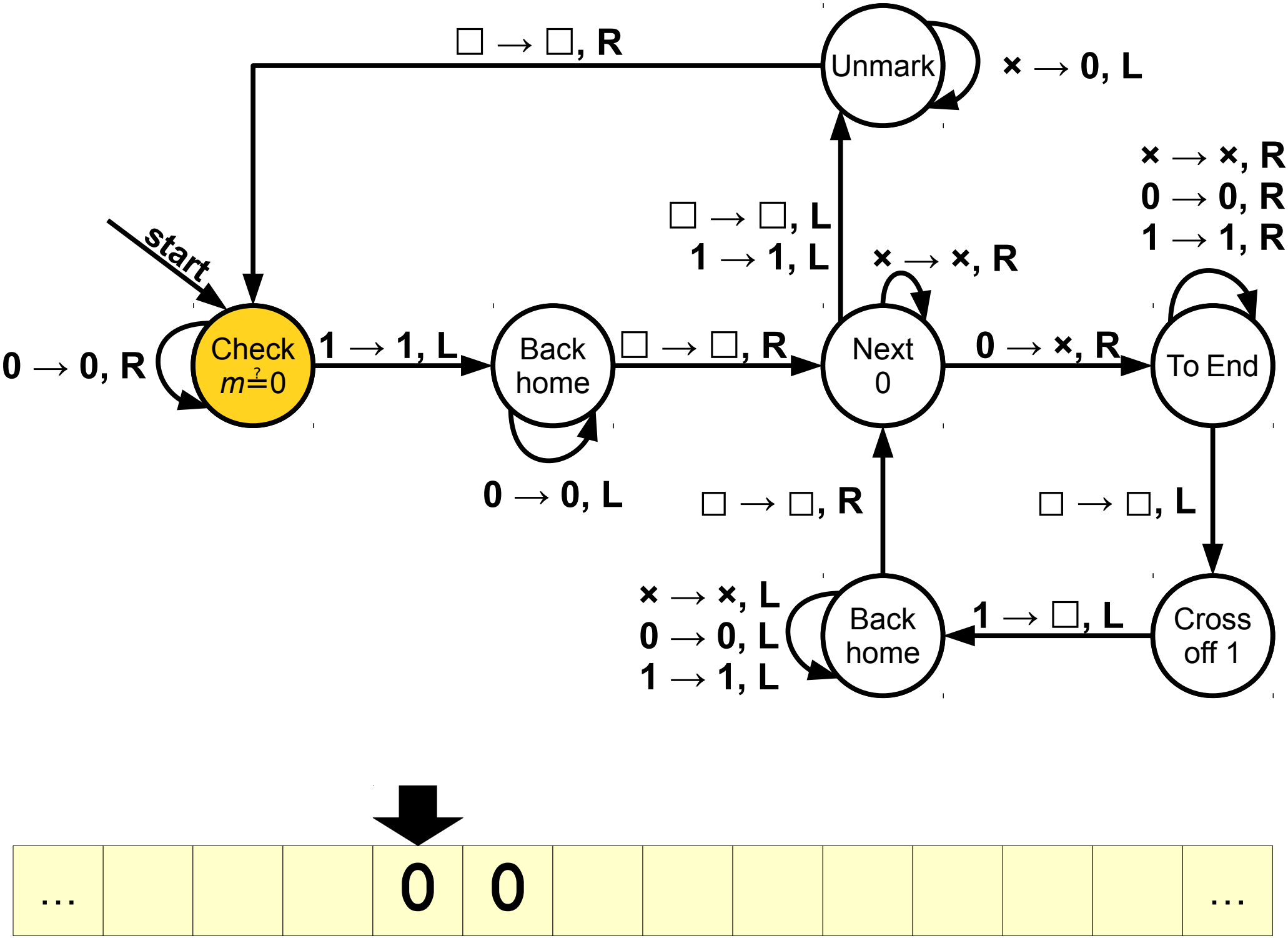
start
Check
m ?= 0
0 → 0, R
1 → 1, L
Back
home
0 → 0, L
□ → □, R
Next
0
× → ×, R
0 → ×, R
To End
× → ×, R
0 → 0, R
1 → 1, R
□ → □, L
Cross
off 1
1 → □, L
Back
home
× → ×, L
0 → 0, L
1 → 1, L
□ → □, R
□ → □, L
1 → 1, L
Unmark
× → 0, L
□ → □, R
…
0
0
…

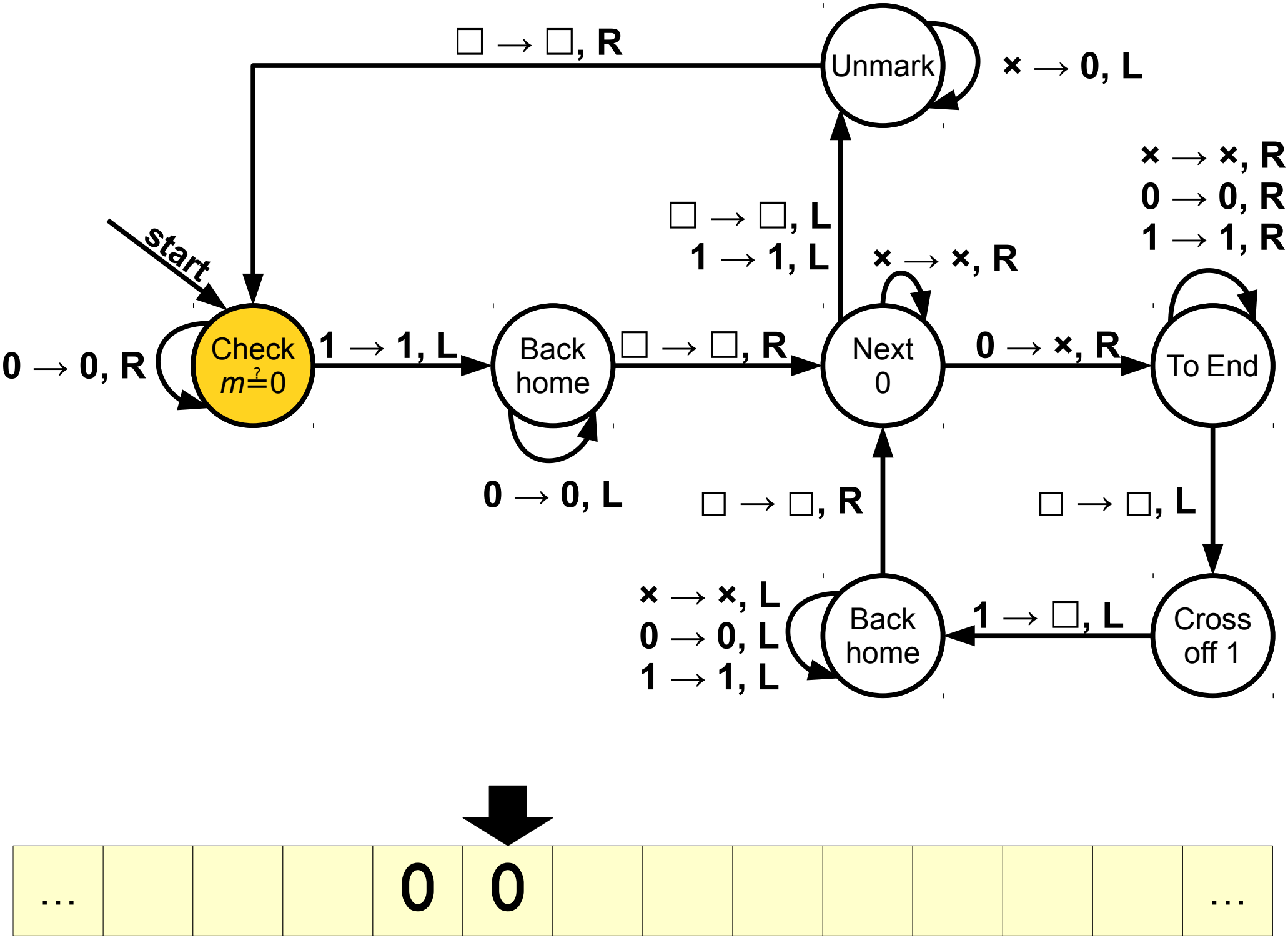
start
Check
m ?= 0
0 → 0, R
1 → 1, L
Back
home
0 → 0, L
□ → □, R
Next
0
× → ×, R
□ → □, L
1 → 1, L
Unmark
× → 0, L
□ → □, R
0 → ×, R
To End
× → ×, R
0 → 0, R
1 → 1, R
□ → □, L
Cross
off 1
1 → □, L
Back
home
× → ×, L
0 → 0, L
1 → 1, L
□ → □, R
…
0
0
…

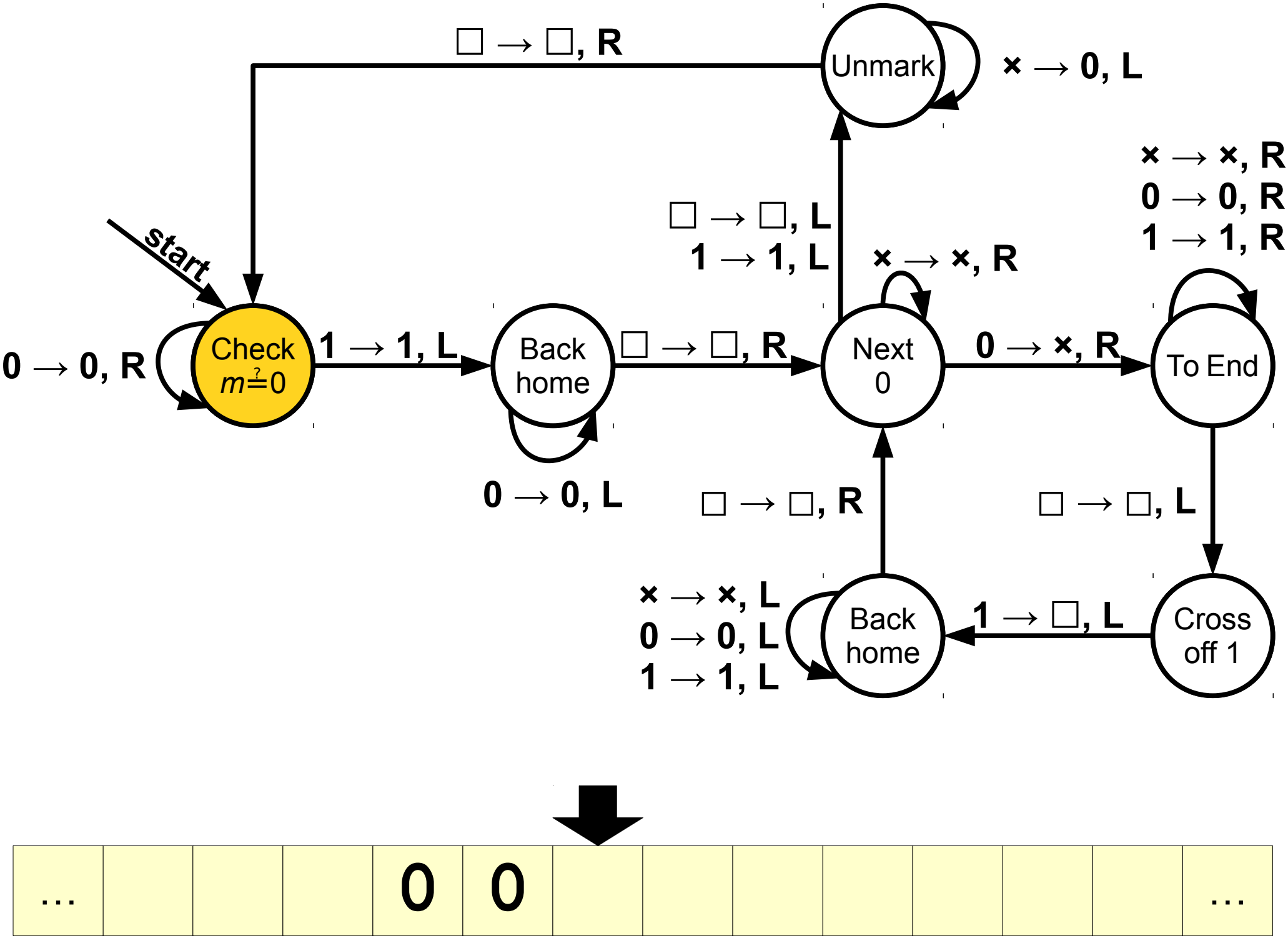
start
Check
m ?= 0
0 → 0, R
1 → 1, L
Back
home
0 → 0, L
□ → □, R
Next
0
× → ×, R
0 → ×, R
To End
× → ×, R
0 → 0, R
1 → 1, R
□ → □, L
Cross
off 1
1 → □, L
Back
home
× → ×, L
0 → 0, L
1 → 1, L
□ → □, R
□ → □, L
1 → 1, L
Unmark
× → 0, L
□ → □, R
…
0
0
…

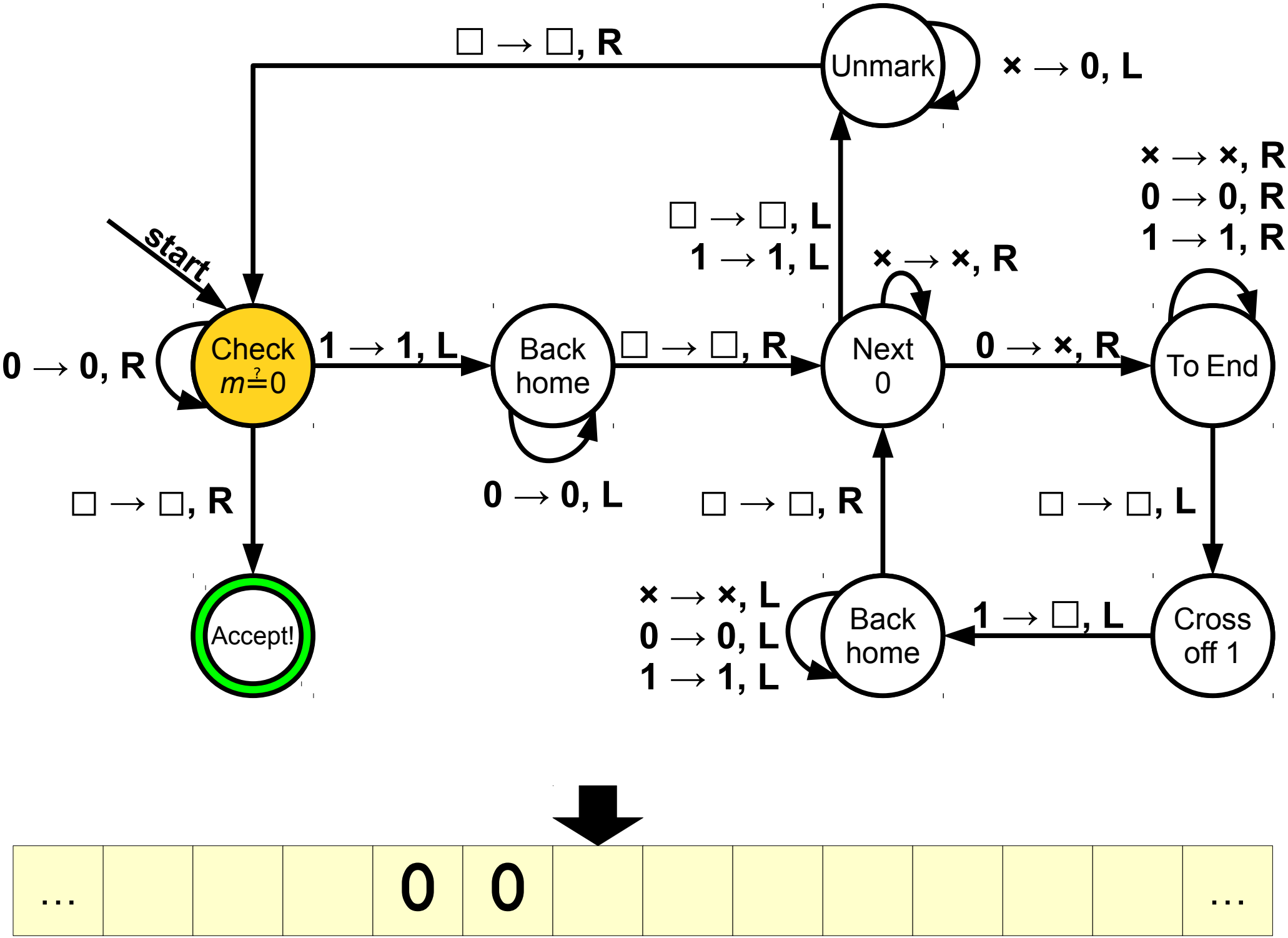
start
Check
m ?= 0
0 → 0, R
1 → 1, L
□ → □, R
Accept!
Back
home
0 → 0, L
□ → □, R
Next
0
□ → □, L
1 → 1, L
× → ×, R
0 → ×, R
Unmark
× → 0, L
□ → □, R
To End
× → ×, R
0 → 0, R
1 → 1, R
□ → □, L
Cross
off 1
1 → □, L
Back
home
× → ×, L
0 → 0, L
1 → 1, L
□ → □, R
…
0
0
…

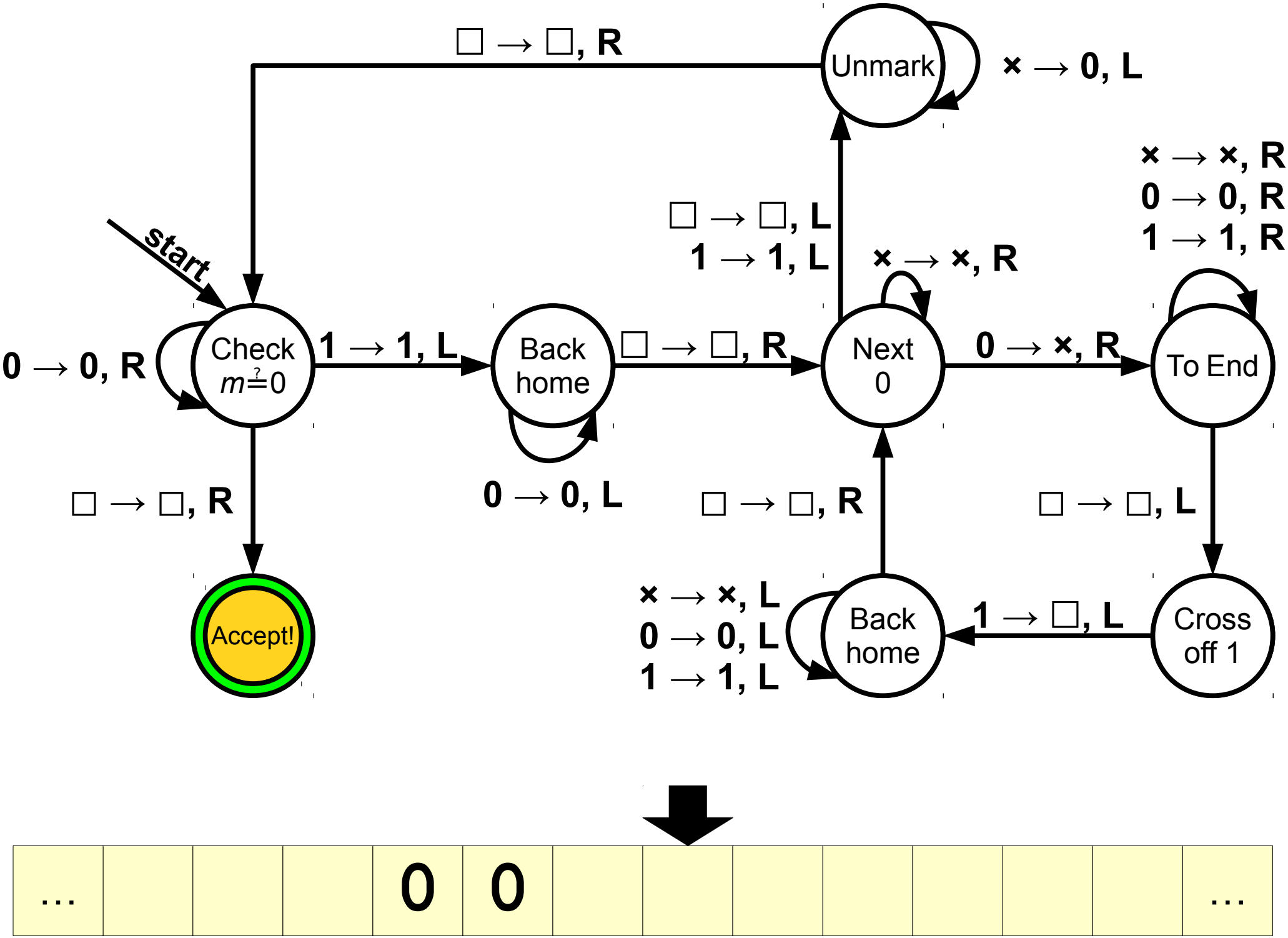
start
Check
m ?= 0
0 → 0, R
1 → 1, L
□ → □, R
Accept!
Back
home
0 → 0, L
□ → □, R
Next
0
□ → □, L
1 → 1, L
× → ×, R
0 → ×, R
Unmark
× → 0, L
□ → □, R
To End
× → ×, R
0 → 0, R
1 → 1, R
□ → □, L
Cross
off 1
1 → □, L
Back
home
× → ×, L
0 → 0, L
1 → 1, L
□ → □, R
…
0
0
…

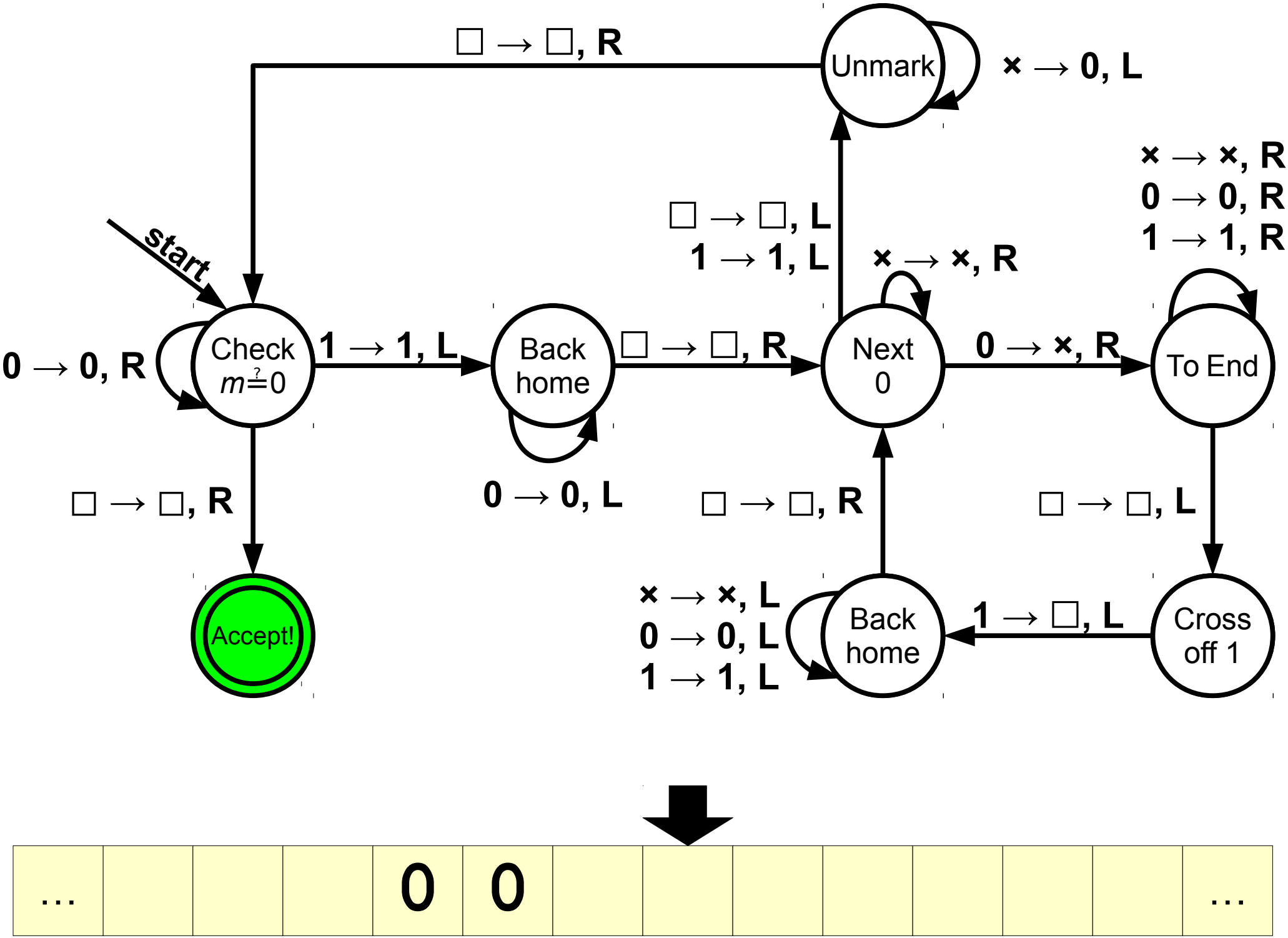
start
Check
m ?= 0
0 → 0, R
□ → □, R
Accept!
1 → 1, L
Back
home
0 → 0, L
□ → □, R
Next
0
× → ×, R
□ → □, L
1 → 1, L
Unmark
× → 0, L
□ → □, R
0 → ×, R
To End
× → ×, R
0 → 0, R
1 → 1, R
□ → □, L
Cross
off 1
1 → □, L
Back
home
× → ×, L
0 → 0, L
1 → 1, L
□ → □, R
…
0
0
…

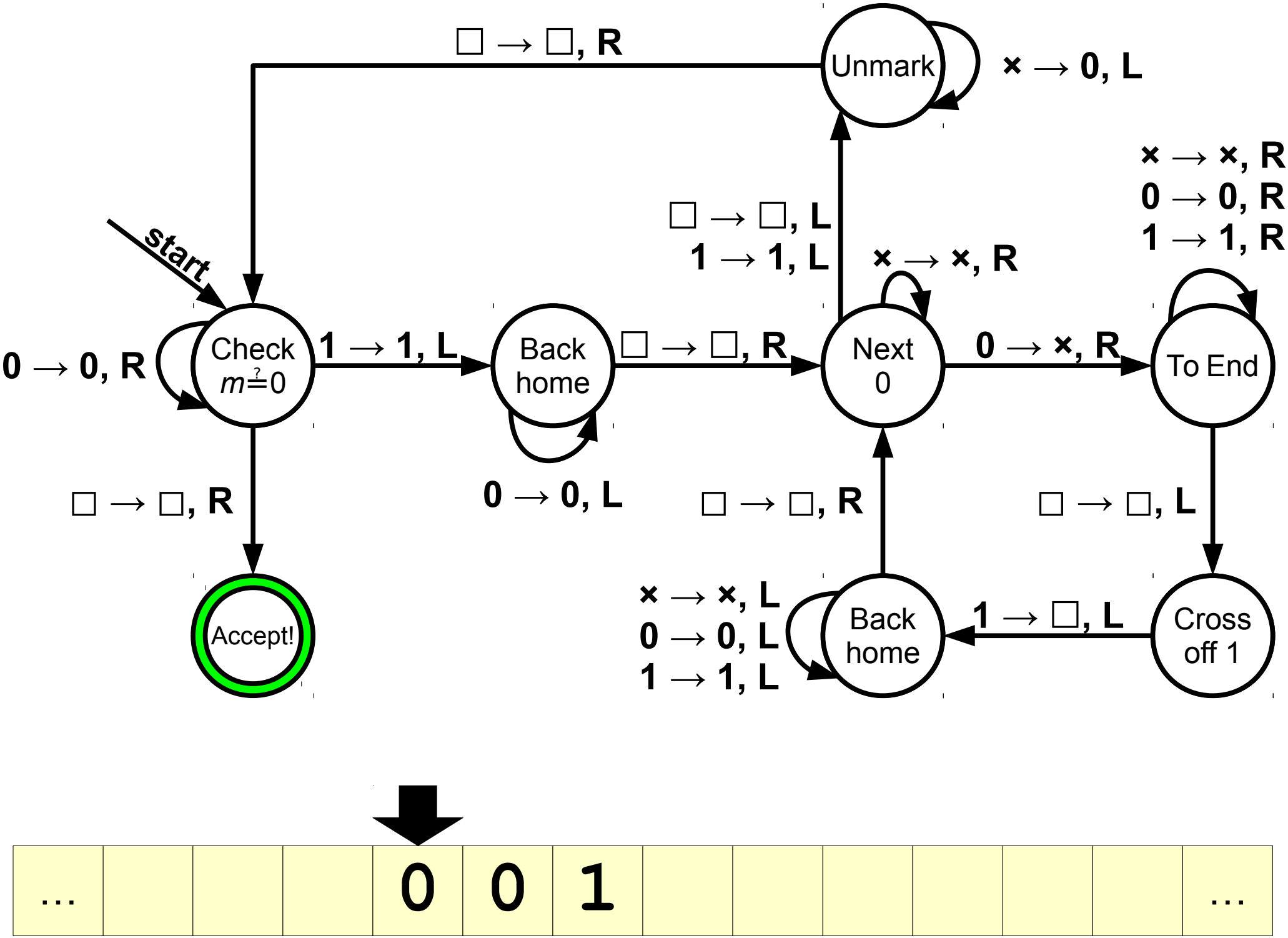
start
Check
m ?= 0
0 → 0, R
1 → 1, L
□ → □, R
Accept!
Back
home
0 → 0, L
□ → □, R
Next
0
□ → □, L
1 → 1, L
× → ×, R
0 → ×, R
Unmark
× → 0, L
□ → □, R
To End
× → ×, R
0 → 0, R
1 → 1, R
□ → □, L
Cross
off 1
1 → □, L
Back
home
× → ×, L
0 → 0, L
1 → 1, L
□ → □, R
…
0
0
1
…

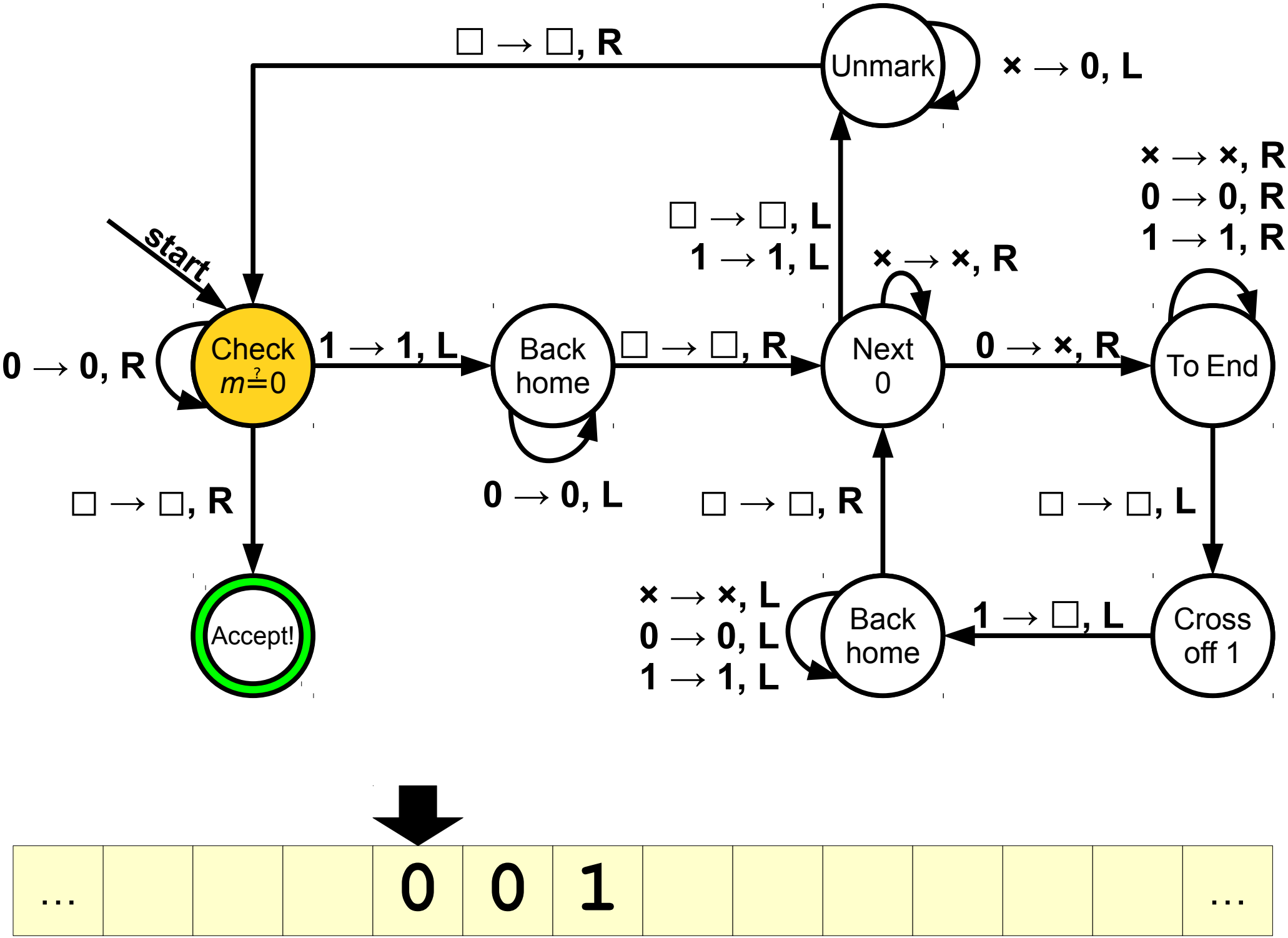
start
Check
m ?= 0
0 → 0, R
1 → 1, L
□ → □, R
Accept!
Back
home
0 → 0, L
□ → □, R
Next
0
□ → □, L
1 → 1, L
× → ×, R
0 → ×, R
Unmark
× → 0, L
□ → □, R
To End
× → ×, R
0 → 0, R
1 → 1, R
□ → □, L
Cross
off 1
1 → □, L
Back
home
× → ×, L
0 → 0, L
1 → 1, L
□ → □, R
…
0
0
1
…

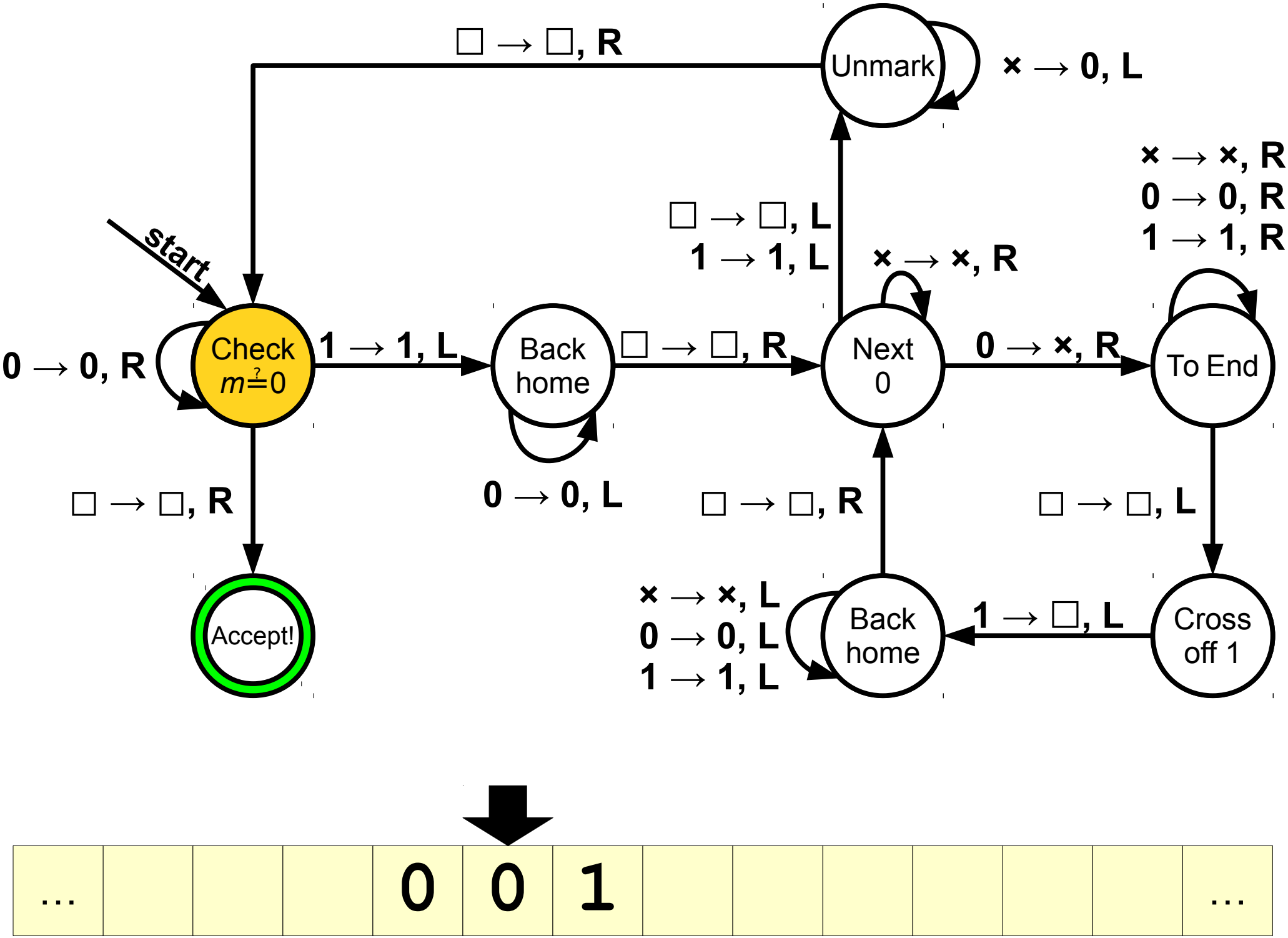
start
Check
m ?= 0
0 → 0, R
1 → 1, L
□ → □, R
Accept!
Back
home
0 → 0, L
□ → □, R
Next
0
□ → □, L
1 → 1, L
× → ×, R
0 → ×, R
Unmark
× → 0, L
□ → □, R
To End
× → ×, R
0 → 0, R
1 → 1, R
□ → □, L
Cross
off 1
1 → □, L
Back
home
× → ×, L
0 → 0, L
1 → 1, L
□ → □, R
…
0
0
1
…

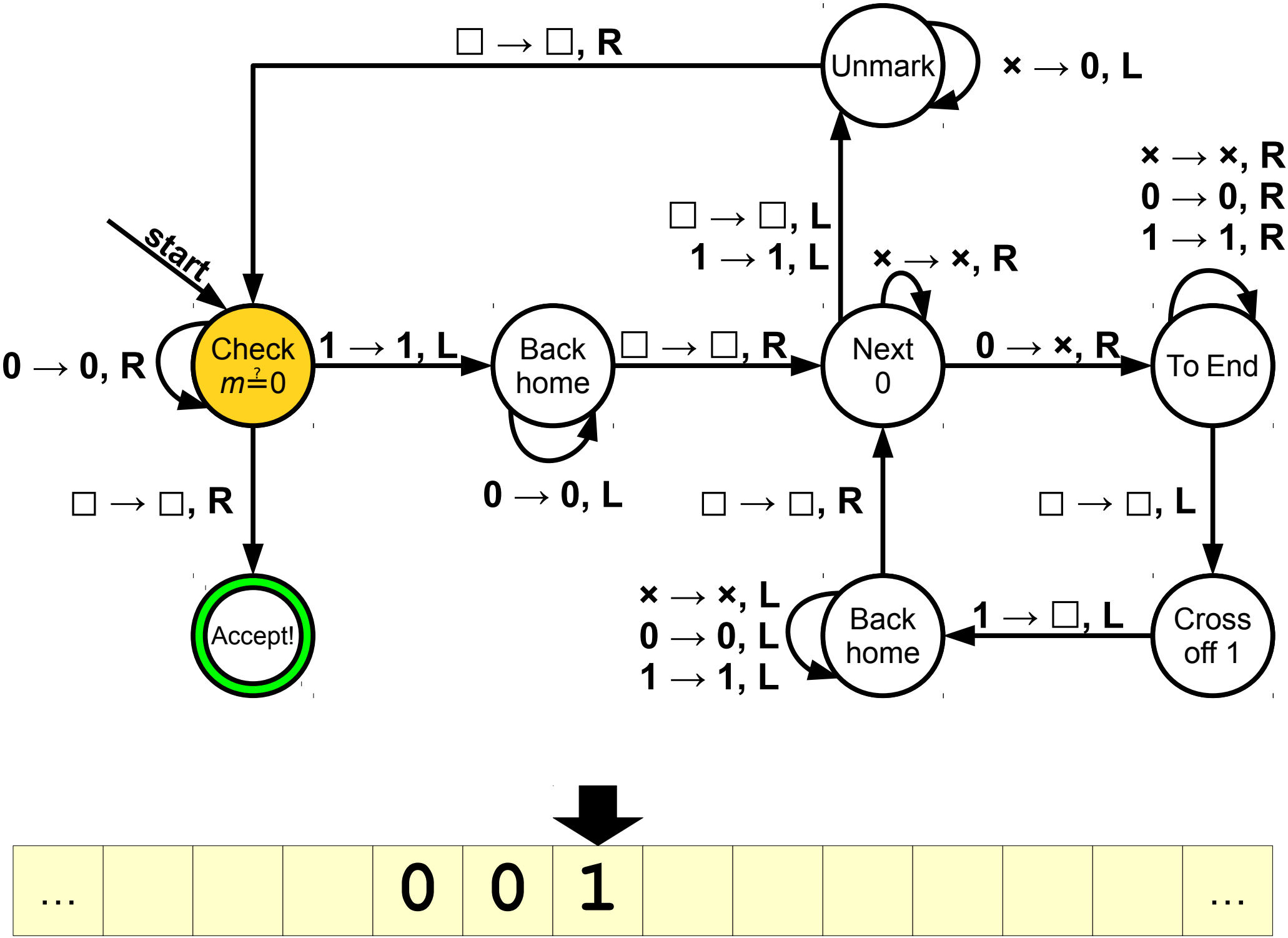
start
Check
m ?= 0
0 → 0, R
1 → 1, L
Back
home
0 → 0, L
□ → □, R
Next
0
× → ×, R
0 → ×, R
To End
× → ×, R
0 → 0, R
1 → 1, R
□ → □, L
Cross
off 1
1 → □, L
Back
home
× → ×, L
0 → 0, L
1 → 1, L
□ → □, R
Unmark
× → 0, L
□ → □, L
1 → 1, L
□ → □, R
Accept!
□ → □, R
…
0
0
1
…

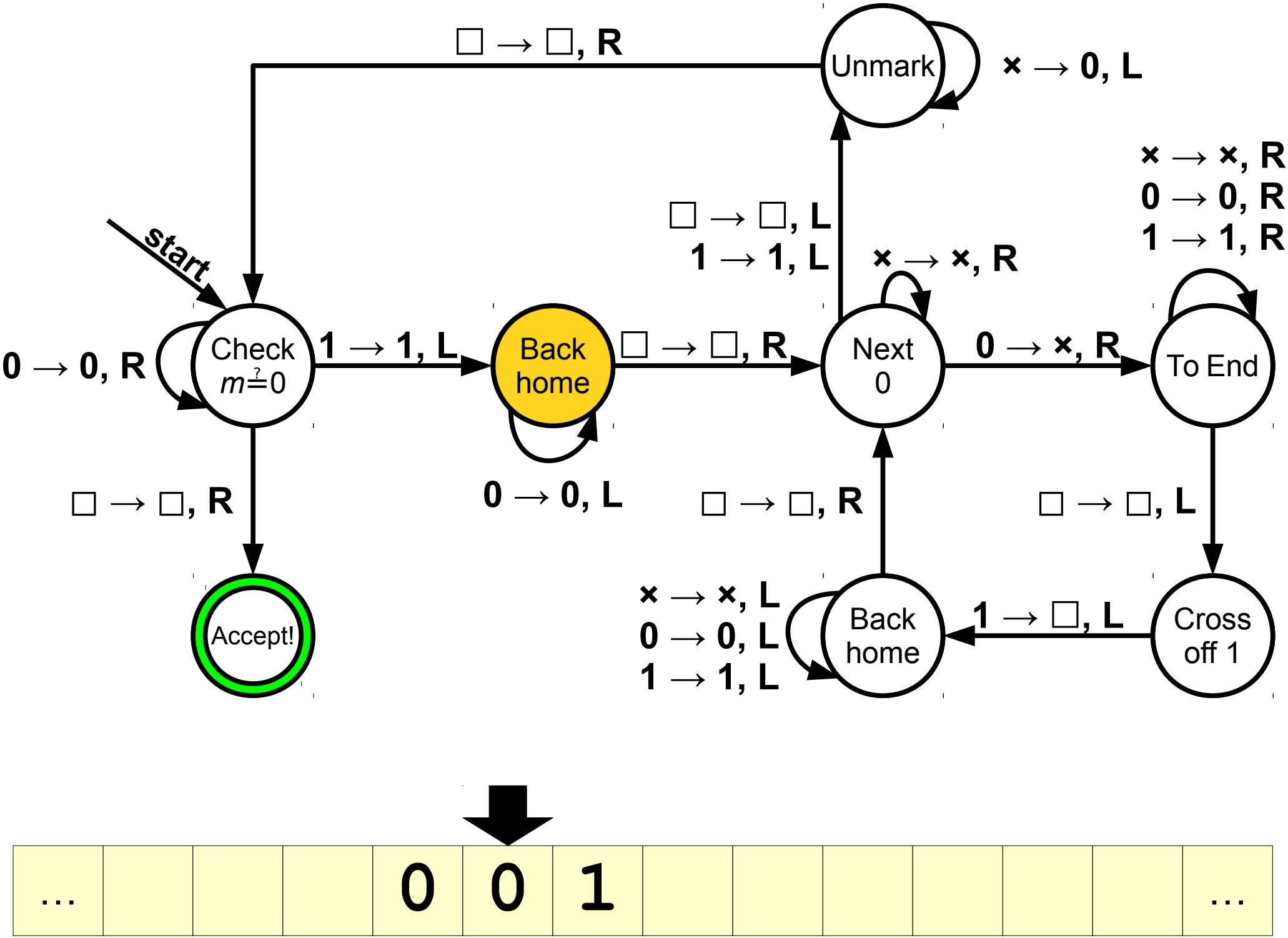
start
Check
m ?= 0
0 → 0, R
1 → 1, L
□ → □, R
Accept!
Back
home
0 → 0, L
□ → □, R
Next
0
□ → □, L
1 → 1, L
× → ×, R
0 → ×, R
Unmark
× → 0, L
□ → □, R
To End
× → ×, R
0 → 0, R
1 → 1, R
□ → □, L
Cross
off 1
1 → □, L
Back
home
× → ×, L
0 → 0, L
1 → 1, L
□ → □, R
…
0
0
1
…

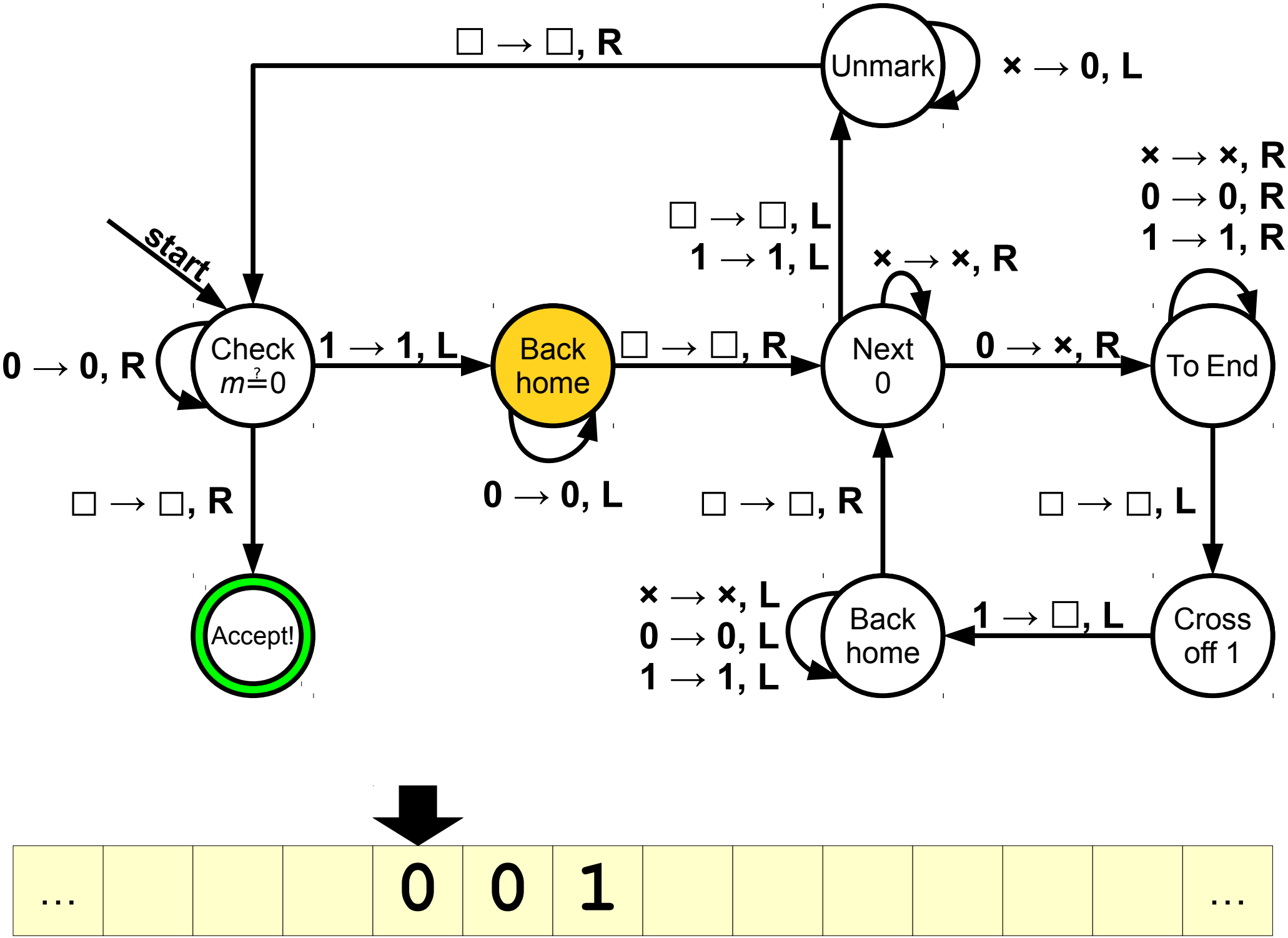
start
Check
m ?= 0
0 → 0, R
1 → 1, L
Back
home
0 → 0, L
□ → □, R
Next
0
× → ×, R
0 → ×, R
To End
× → ×, R
0 → 0, R
1 → 1, R
□ → □, L
Cross
off 1
1 → □, L
Back
home
× → ×, L
0 → 0, L
1 → 1, L
□ → □, R
Unmark
× → 0, L
□ → □, L
1 → 1, L
□ → □, R
Accept!
□ → □, R
0 0 1
…
…

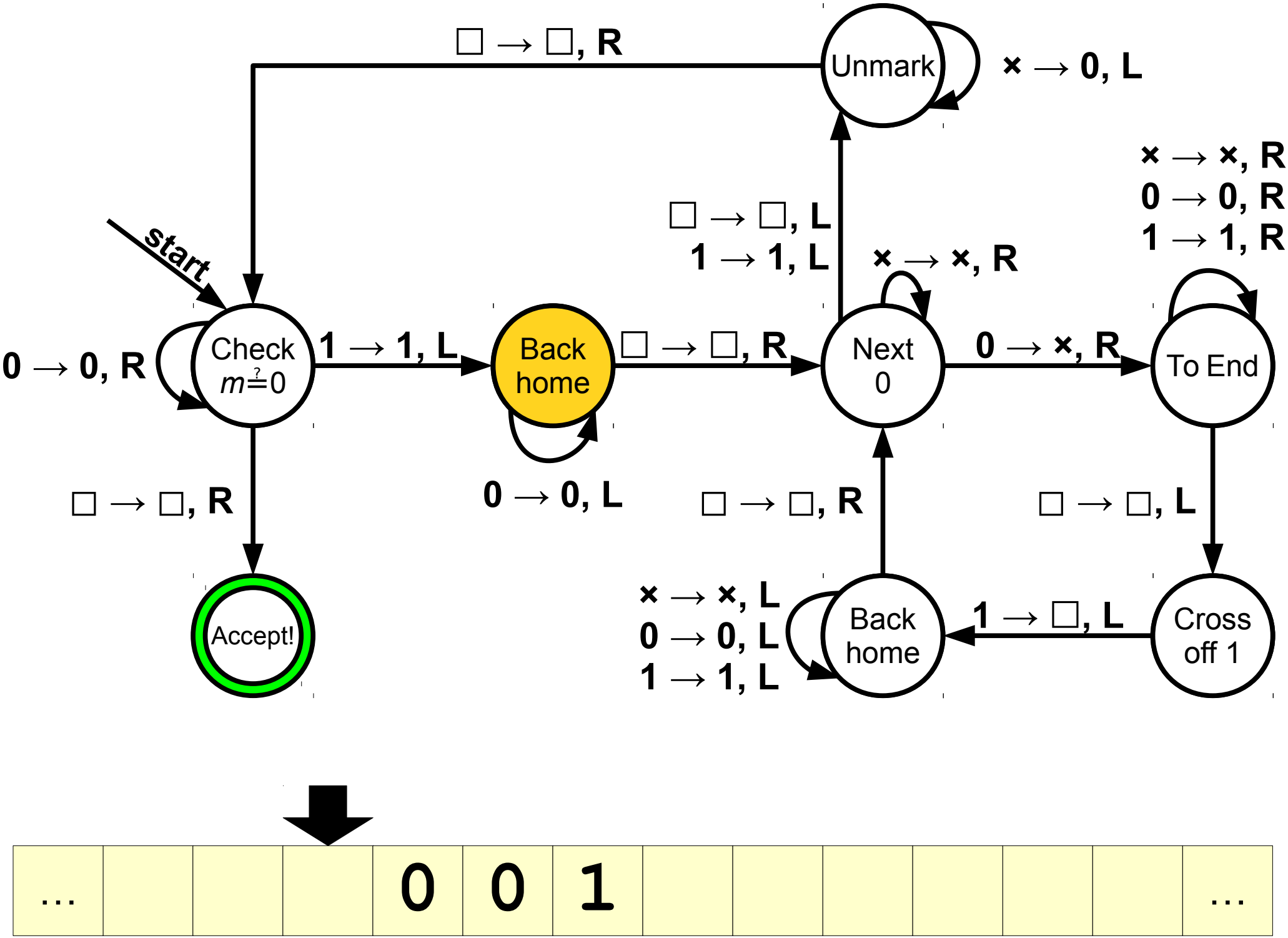
start
Check
m ?= 0
0 → 0, R
1 → 1, L
Back
home
0 → 0, L
□ → □, R
Next
0
× → ×, R
0 → ×, R
To End
× → ×, R
0 → 0, R
1 → 1, R
□ → □, L
Cross
off 1
1 → □, L
Back
home
× → ×, L
0 → 0, L
1 → 1, L
□ → □, R
Unmark
× → 0, L
□ → □, L
1 → 1, L
□ → □, R
Accept!
□ → □, R
0 0 1
…
…

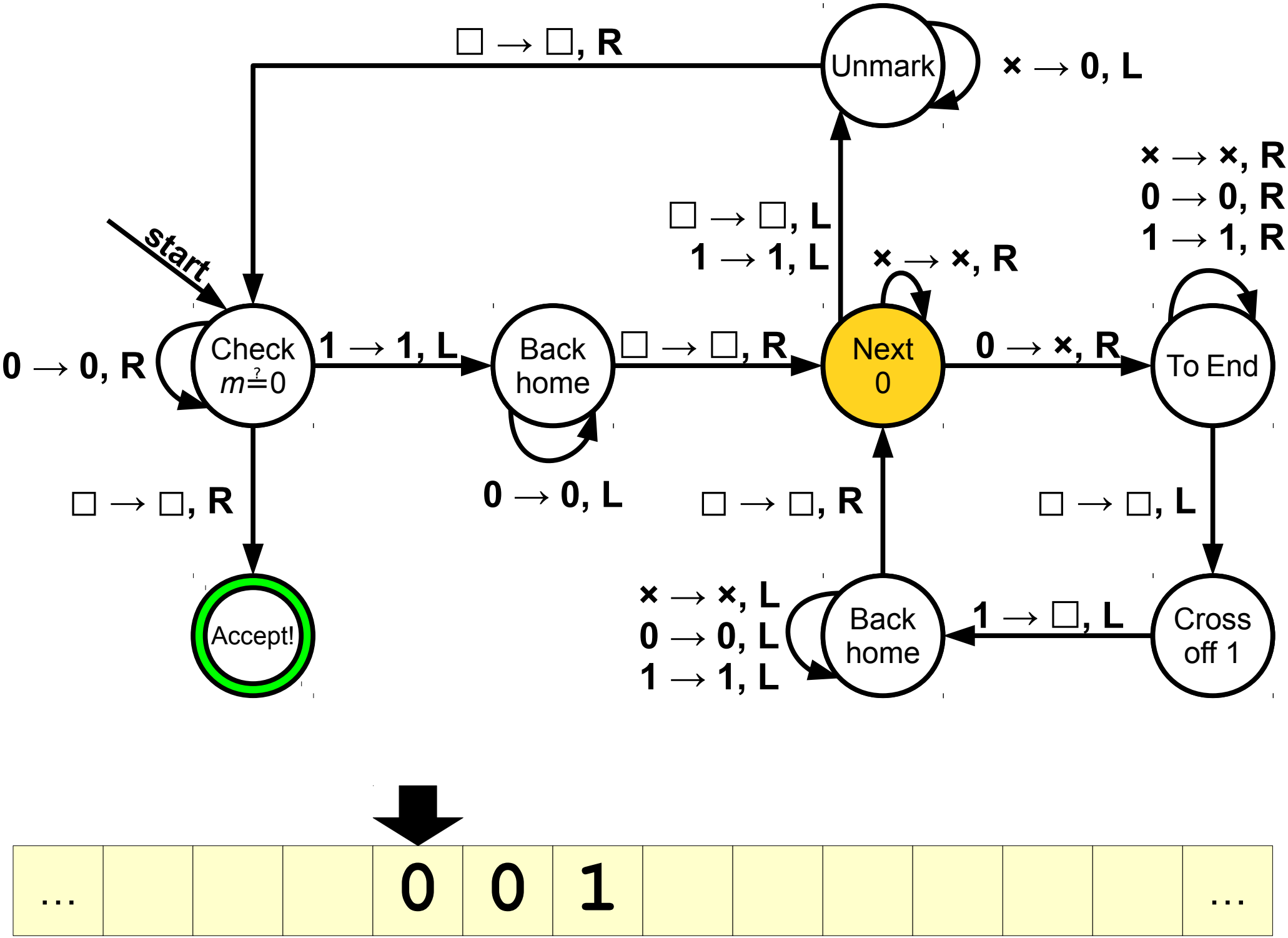
start
Check
m ?= 0
0 → 0, R
1 → 1, L
Back
home
0 → 0, L
□ → □, R
Next
0
× → ×, R
0 → ×, R
To End
× → ×, R
0 → 0, R
1 → 1, R
□ → □, L
Cross
off 1
1 → □, L
Back
home
× → ×, L
0 → 0, L
1 → 1, L
□ → □, R
Unmark
× → 0, L
□ → □, L
1 → 1, L
□ → □, R
Accept!
□ → □, R
0 0 1
…
…

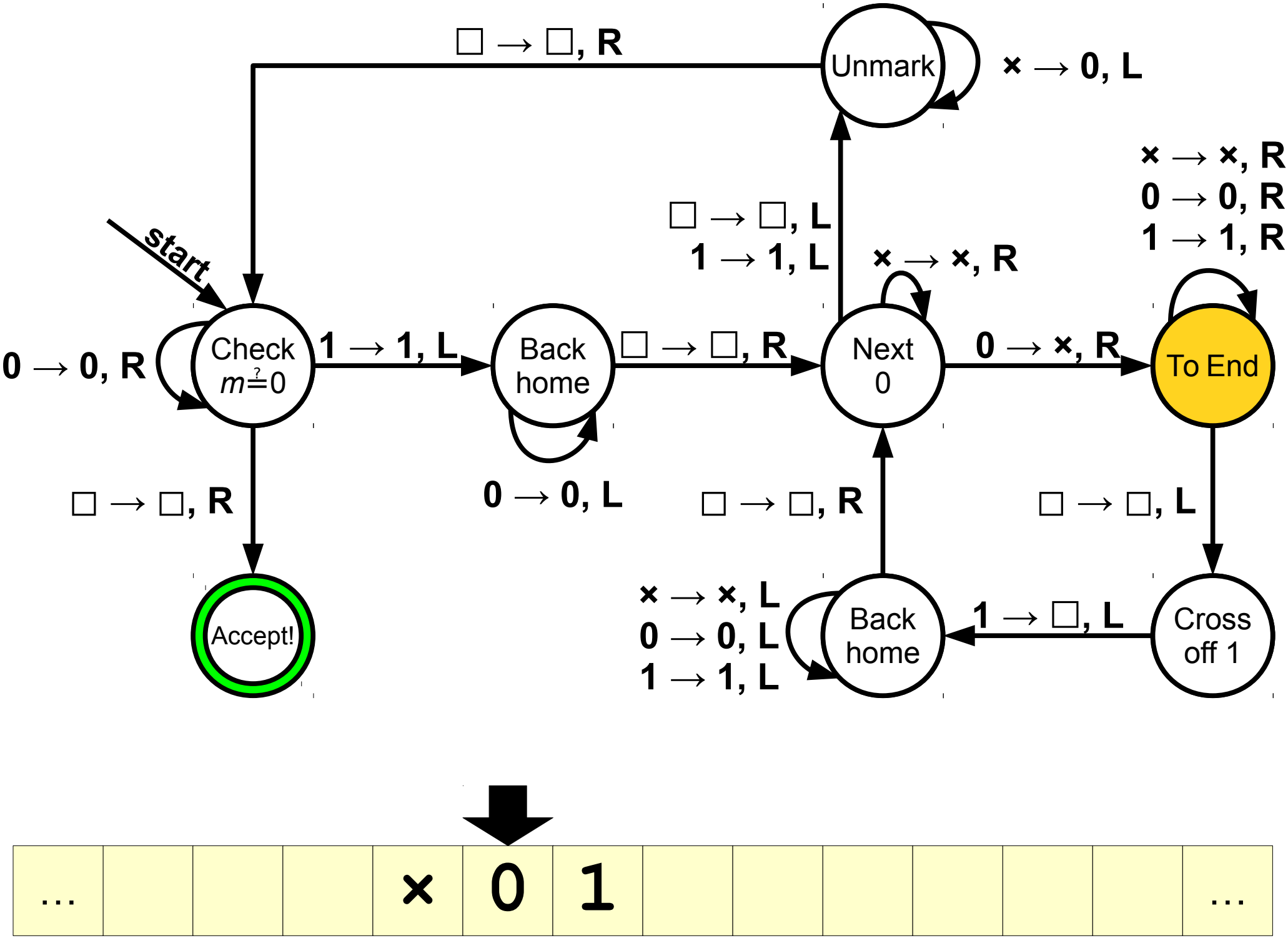
start
Check
m ?= 0
0 → 0, R
1 → 1, L
□ → □, R
Accept!
Back
home
0 → 0, L
□ → □, R
Next
0
× → ×, R
0 → ×, R
□ → □, L
1 → 1, L
Unmark
× → 0, L
□ → □, R
To End
× → ×, R
0 → 0, R
1 → 1, R
□ → □, L
Cross
off 1
1 → □, L
Back
home
× → ×, L
0 → 0, L
1 → 1, L
□ → □, R
…
×
0
1
…

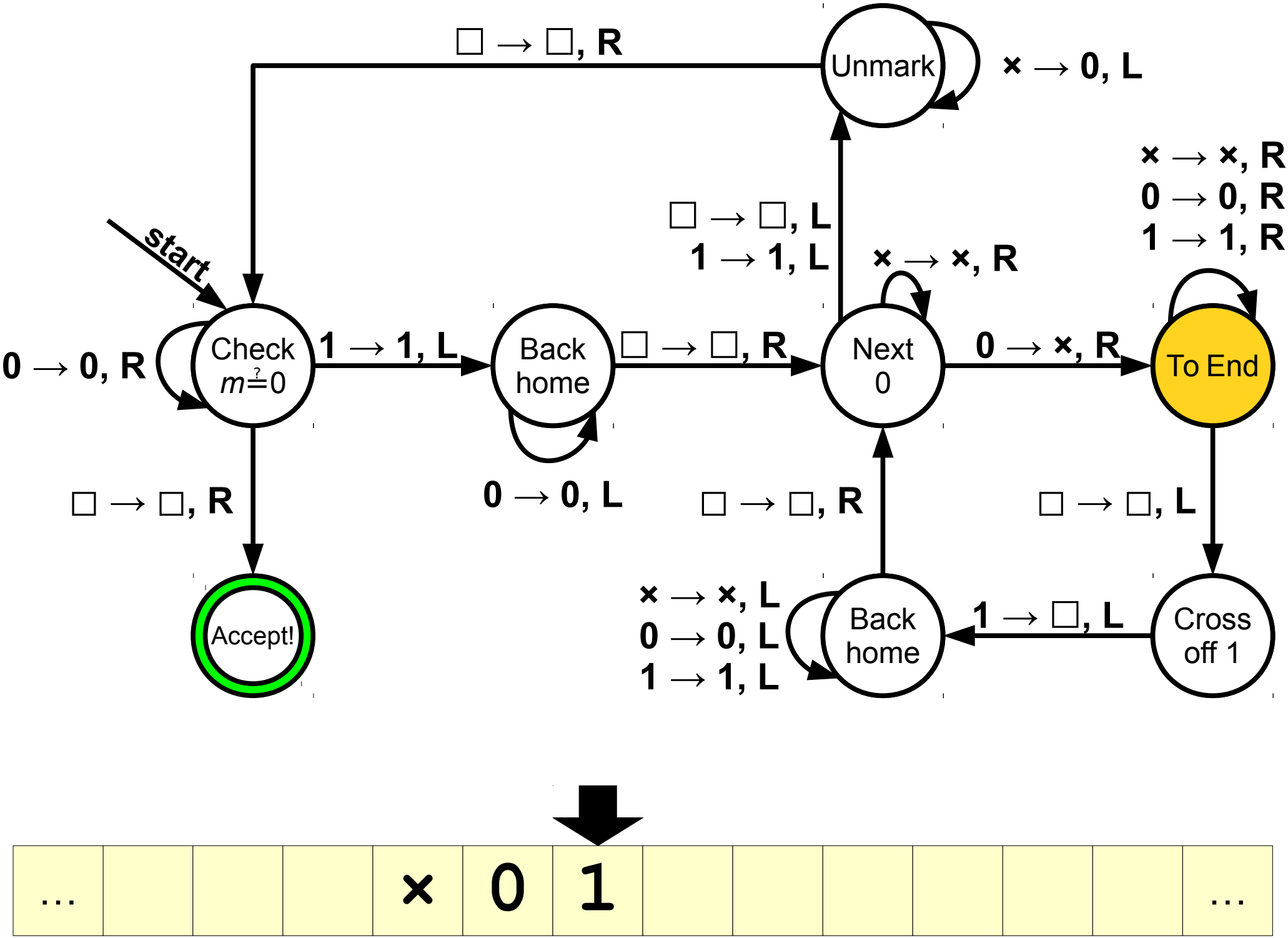
start
Check
m ?= 0
0 → 0, R
1 → 1, L
□ → □, R
Accept!
Back
home
0 → 0, L
□ → □, R
Next
0
□ → □, L
1 → 1, L
× → ×, R
0 → ×, R
Unmark
× → 0, L
□ → □, R
To End
× → ×, R
0 → 0, R
1 → 1, R
□ → □, L
Cross
off 1
1 → □, L
Back
home
× → ×, L
0 → 0, L
1 → 1, L
□ → □, R
…
×
0
1
…

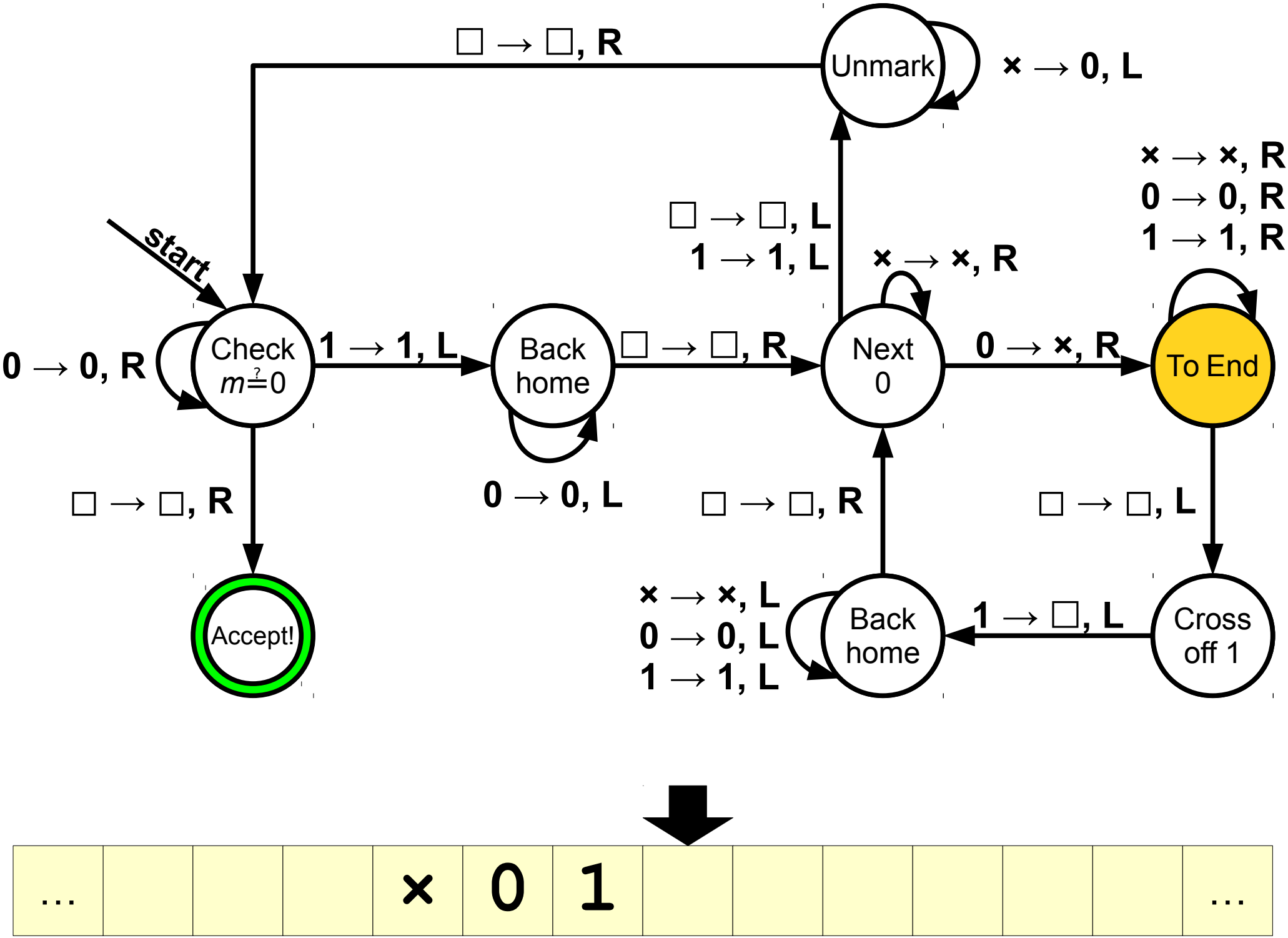
start
Check
m ?= 0
0 → 0, R
1 → 1, L
□ → □, R
Accept!
Back
home
0 → 0, L
□ → □, R
Next
0
□ → □, L
1 → 1, L
× → ×, R
0 → ×, R
Unmark
× → 0, L
□ → □, R
To End
× → ×, R
0 → 0, R
1 → 1, R
□ → □, L
Cross
off 1
1 → □, L
Back
home
× → ×, L
0 → 0, L
1 → 1, L
□ → □, R
…
×
0
1
…

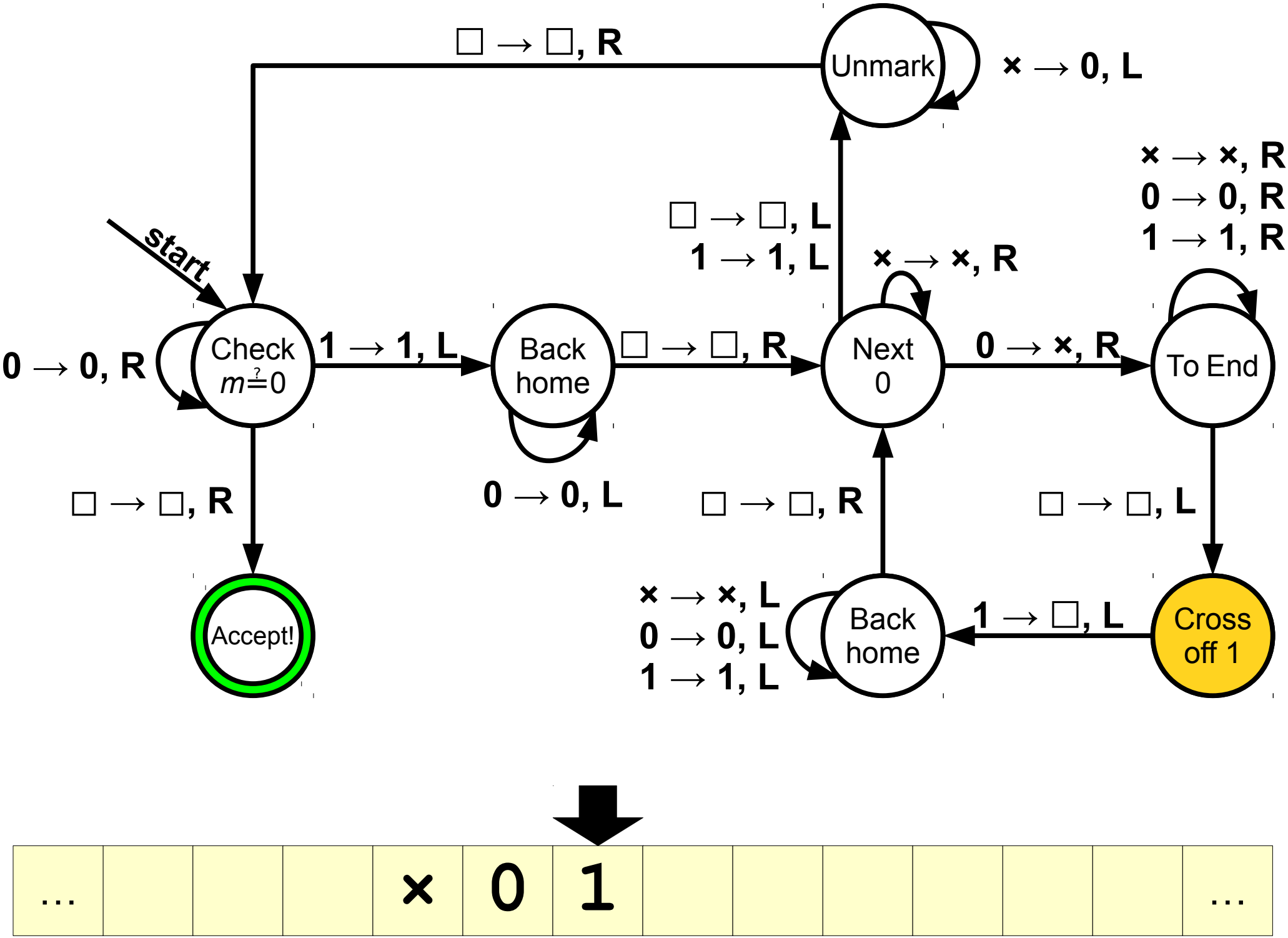
start
Check
m ?= 0
0 → 0, R
□ → □, R
Accept!
1 → 1, L
Back
home
0 → 0, L
□ → □, R
Next
0
× → ×, R
□ → □, L
1 → 1, L
Unmark
× → 0, L
□ → □, R
0 → ×, R
To End
× → ×, R
0 → 0, R
1 → 1, R
□ → □, L
Cross
off 1
1 → □, L
Back
home
× → ×, L
0 → 0, L
1 → 1, L
□ → □, R
…
×
0
1
…

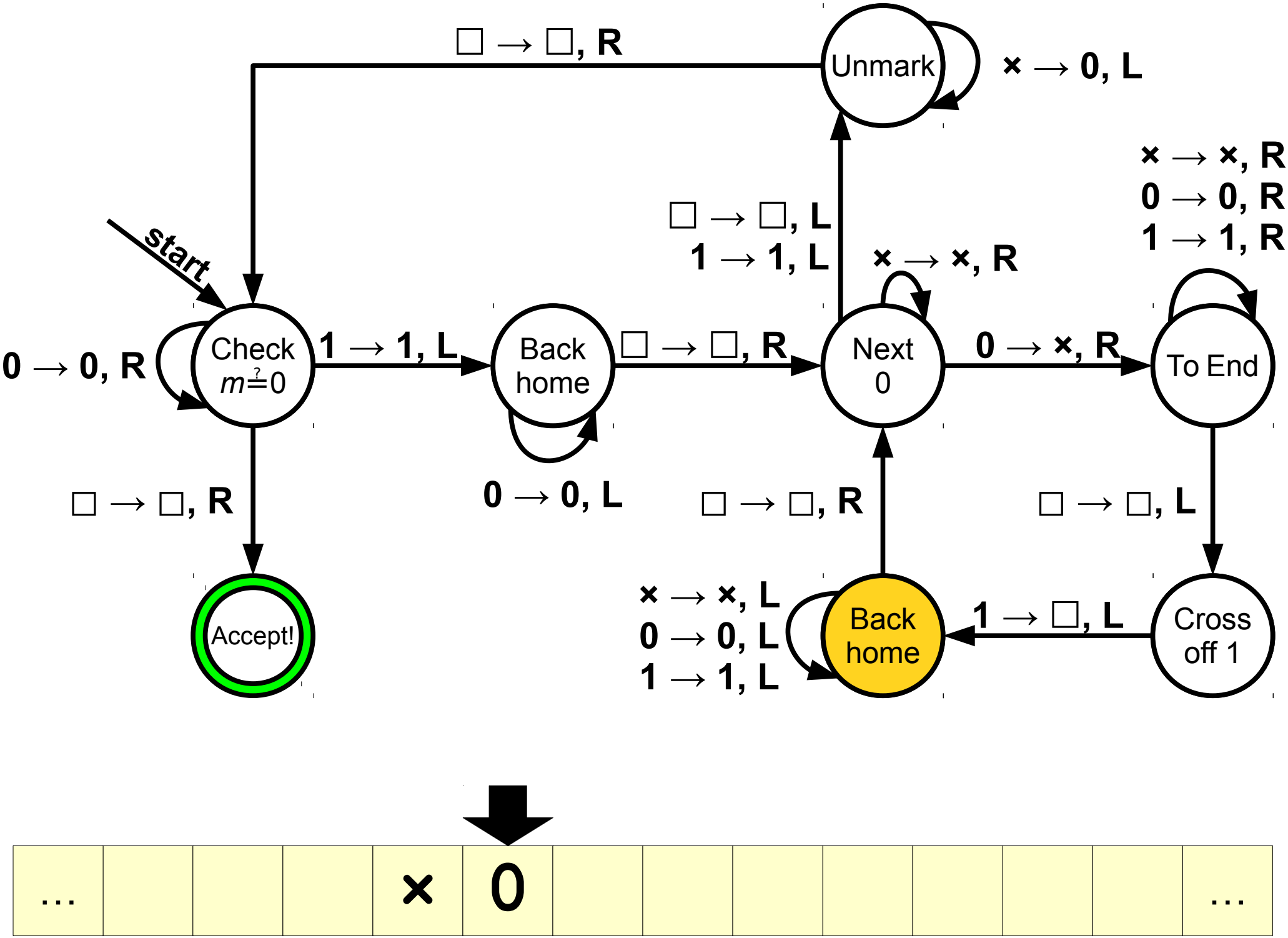
start
Check
m ?= 0
0 → 0, R
□ → □, R
1 → 1, L
Back
home
0 → 0, L
□ → □, R
Next
0
× → ×, R
0 → ×, R
To End
× → ×, R
0 → 0, R
1 → 1, R
□ → □, L
Cross
off 1
1 → □, L
Back
home
× → ×, L
0 → 0, L
1 → 1, L
□ → □, R
Unmark
× → 0, L
□ → □, L
1 → 1, L
□ → □, R
Accept!
…
×
0
…

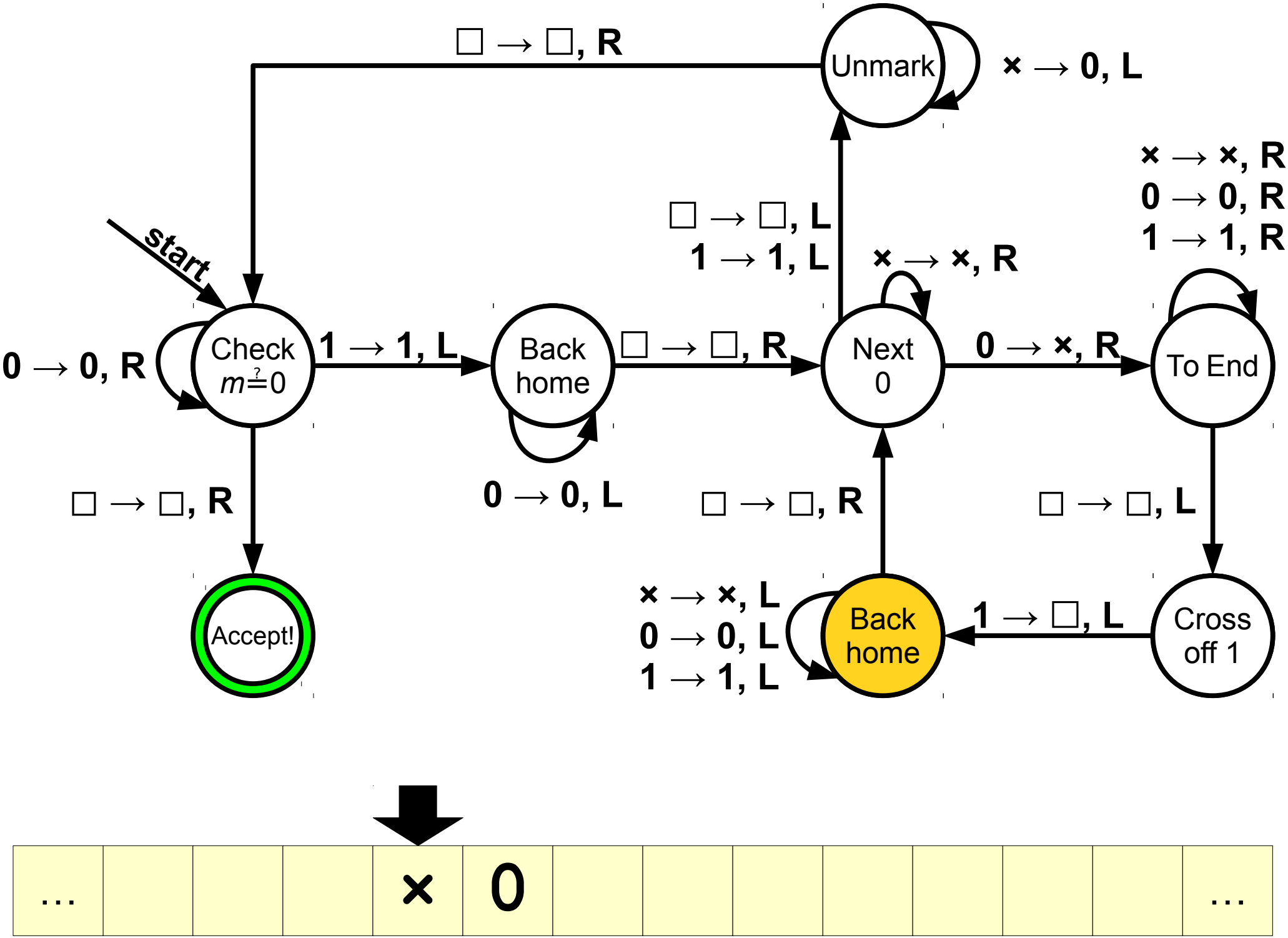
start
Check
m ?= 0
0 → 0, R
□ → □, R
1 → 1, L
Accept!
Back
home
0 → 0, L
□ → □, R
Next
0
□ → □, L
1 → 1, L
× → ×, R
0 → ×, R
Unmark
× → 0, L
□ → □, R
To End
× → ×, R
0 → 0, R
1 → 1, R
□ → □, L
Cross
off 1
1 → □, L
Back
home
× → ×, L
0 → 0, L
1 → 1, L
□ → □, R
…
×
0
…

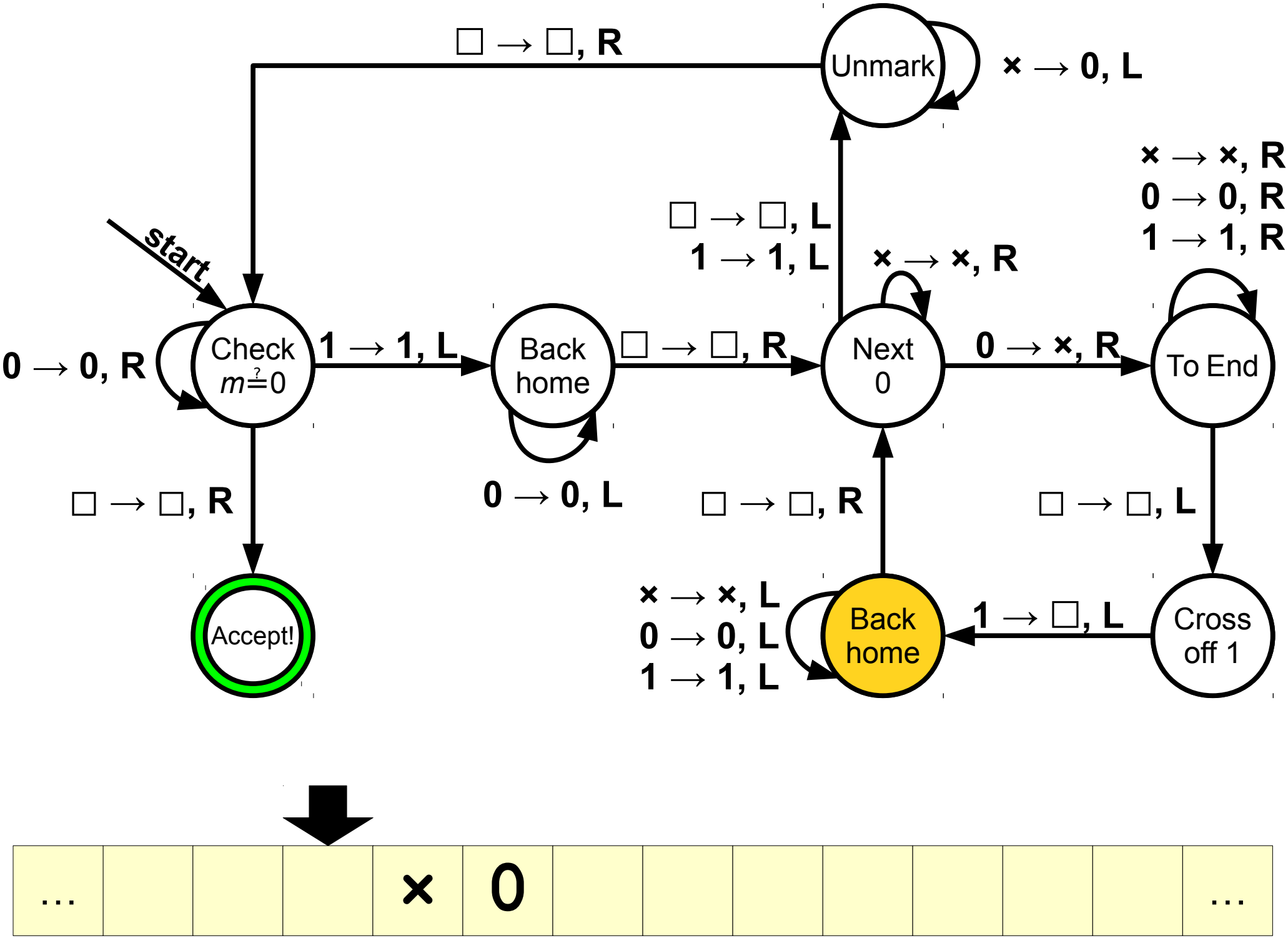
start
Check
m ?= 0
0 → 0, R
1 → 1, L
□ → □, R
Accept!
Back
home
0 → 0, L
□ → □, R
Next
0
× → ×, R
0 → ×, R
□ → □, L
1 → 1, L
Unmark
× → 0, L
□ → □, R
To End
× → ×, R
0 → 0, R
1 → 1, R
□ → □, L
Cross
off 1
1 → □, L
Back
home
× → ×, L
0 → 0, L
1 → 1, L
□ → □, R
…
×
0
…

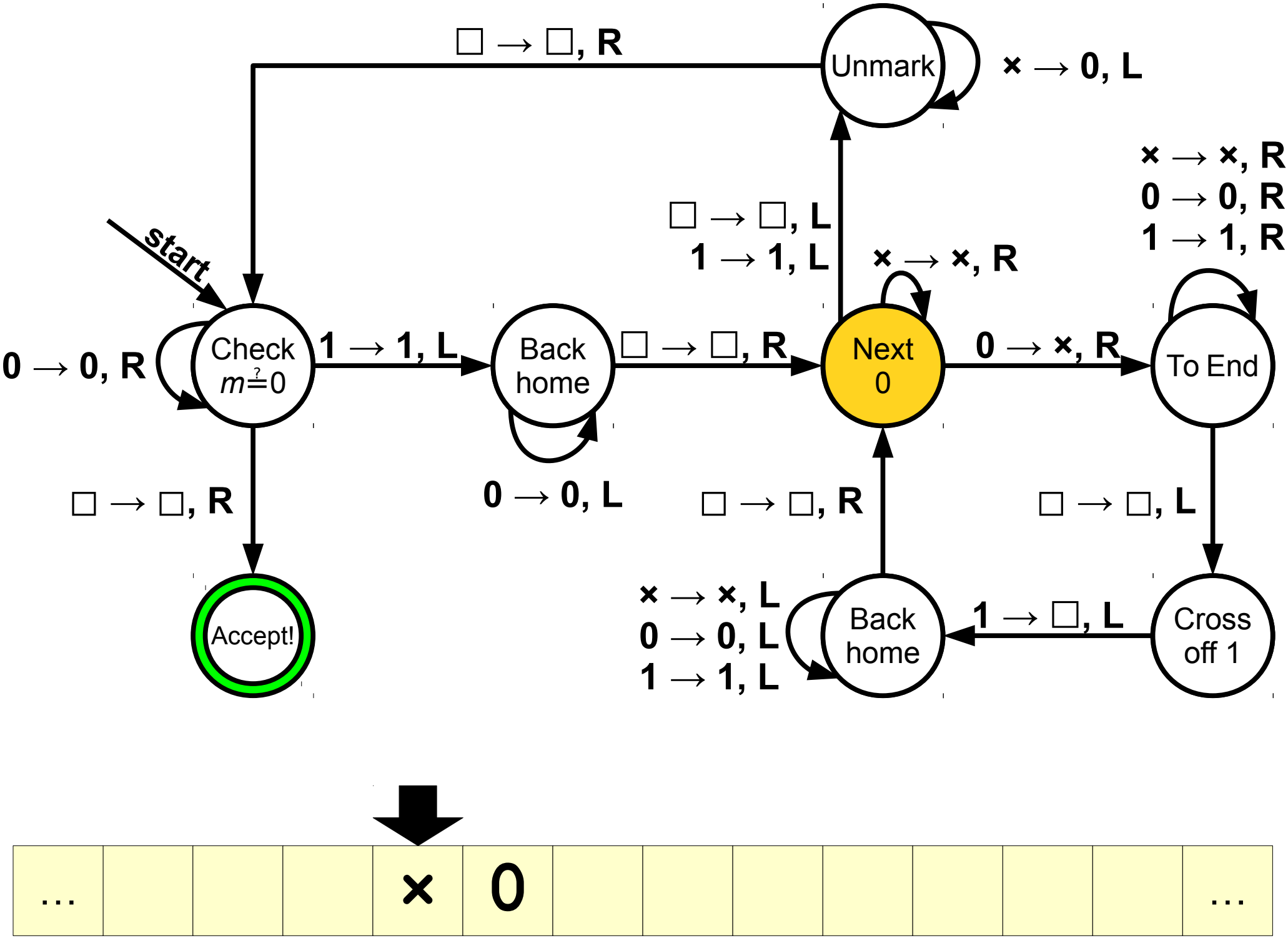
start
Check
m ?= 0
0 → 0, R
1 → 1, L
□ → □, R
Accept!
Back
home
0 → 0, L
□ → □, R
Next
0
□ → □, L
1 → 1, L
× → ×, R
0 → ×, R
Unmark
× → 0, L
□ → □, R
To End
× → ×, R
0 → 0, R
1 → 1, R
□ → □, L
Cross
off 1
1 → □, L
Back
home
× → ×, L
0 → 0, L
1 → 1, L
□ → □, R
…
×
0
…

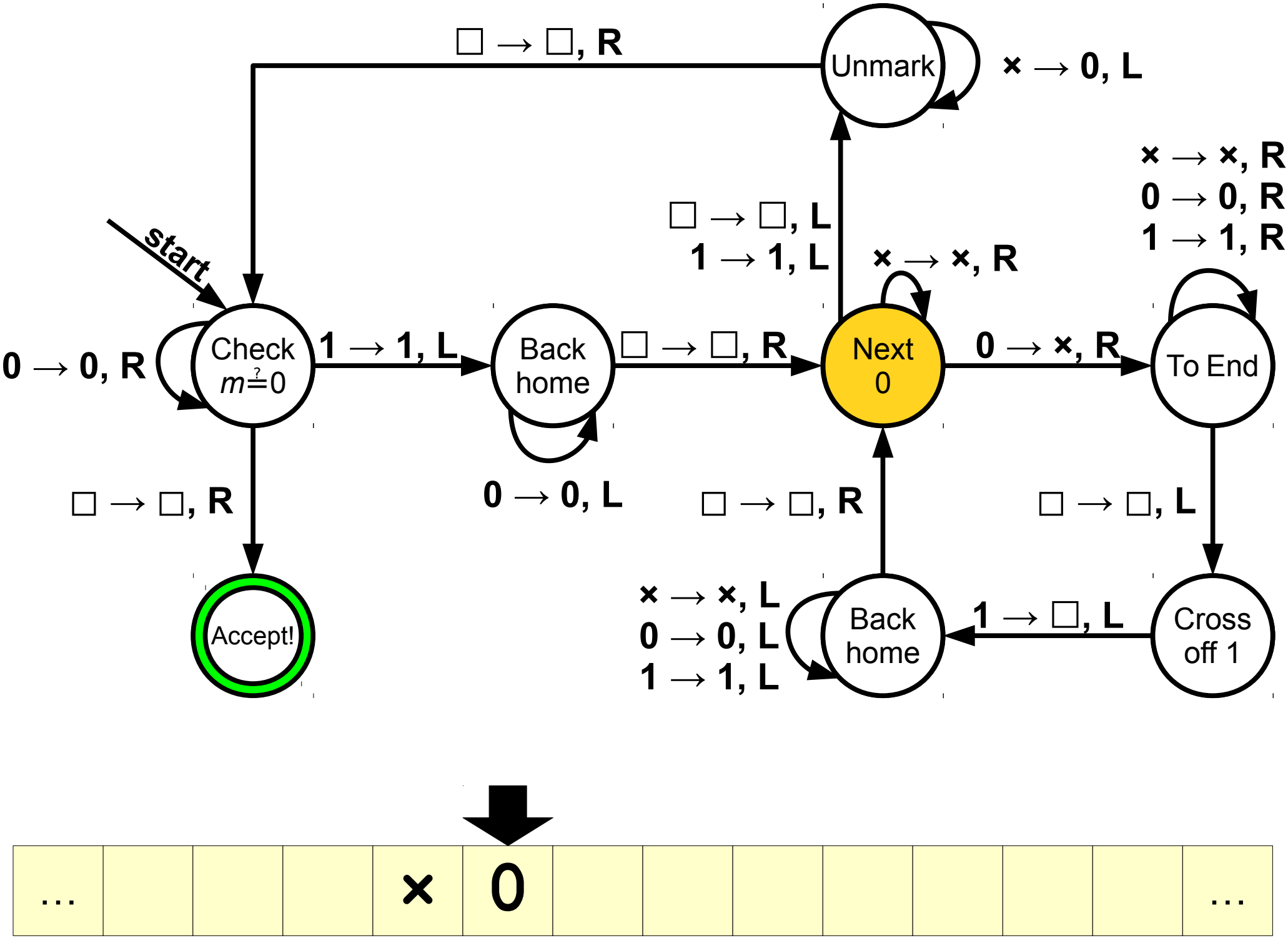
start
Check
m ?= 0
0 → 0, R
1 → 1, L
□ → □, R
Accept!
Back
home
0 → 0, L
□ → □, R
Next
0
□ → □, L
1 → 1, L
× → ×, R
0 → ×, R
Unmark
× → 0, L
□ → □, R
To End
× → ×, R
0 → 0, R
1 → 1, R
□ → □, L
Cross
off 1
1 → □, L
Back
home
× → ×, L
0 → 0, L
1 → 1, L
□ → □, R
…
×
0
…

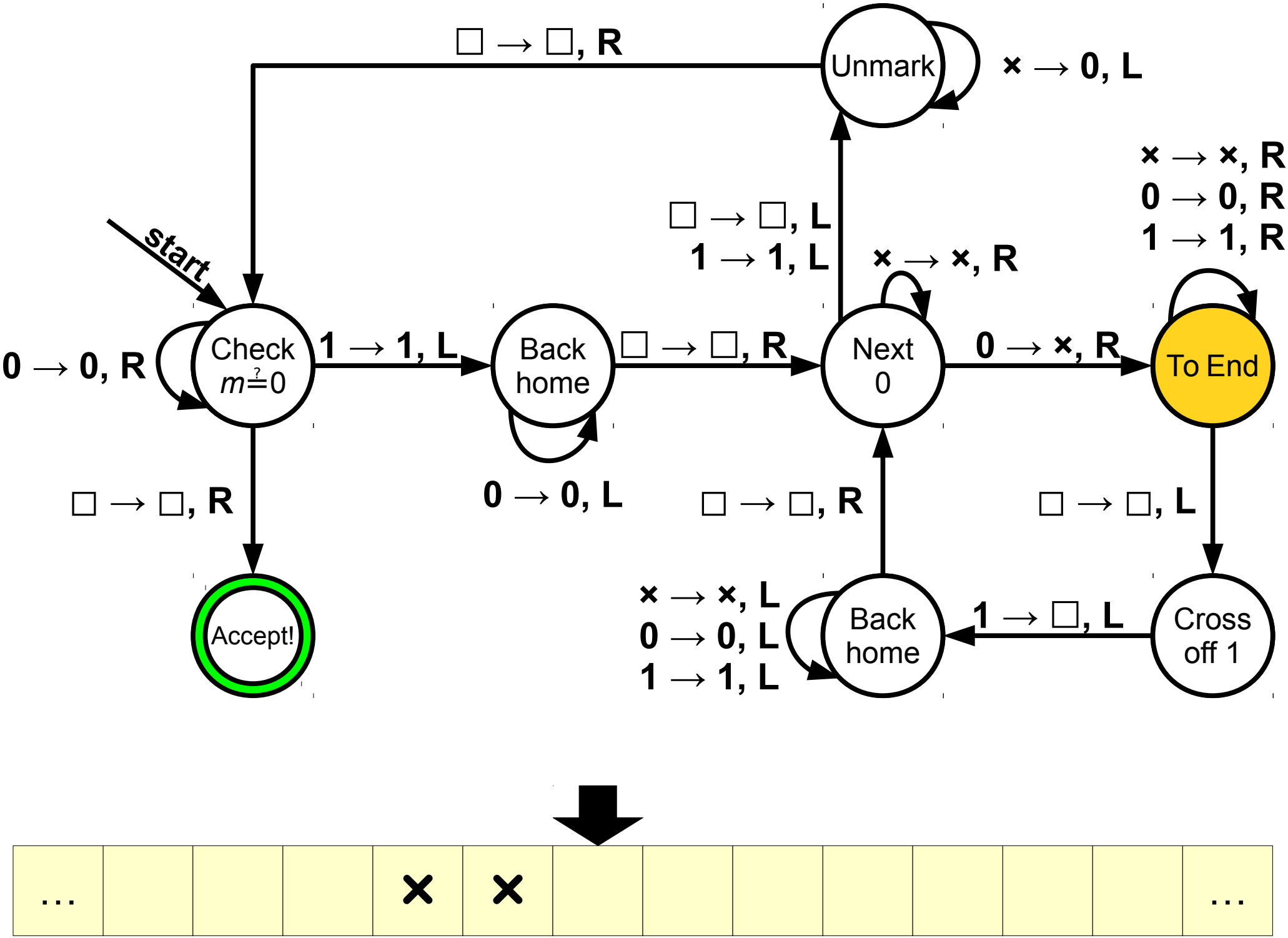
start
Check
m ?= 0
0 → 0, R
1 → 1, L
Back
home
0 → 0, L
□ → □, R
Next
0
× → ×, R
0 → ×, R
To End
× → ×, R
0 → 0, R
1 → 1, R
□ → □, L
Cross
off 1
1 → □, L
Back
home
× → ×, L
0 → 0, L
1 → 1, L
□ → □, R
Unmark
× → 0, L
□ → □, L
1 → 1, L
□ → □, R
Accept!
□ → □, R
…
×
×
…

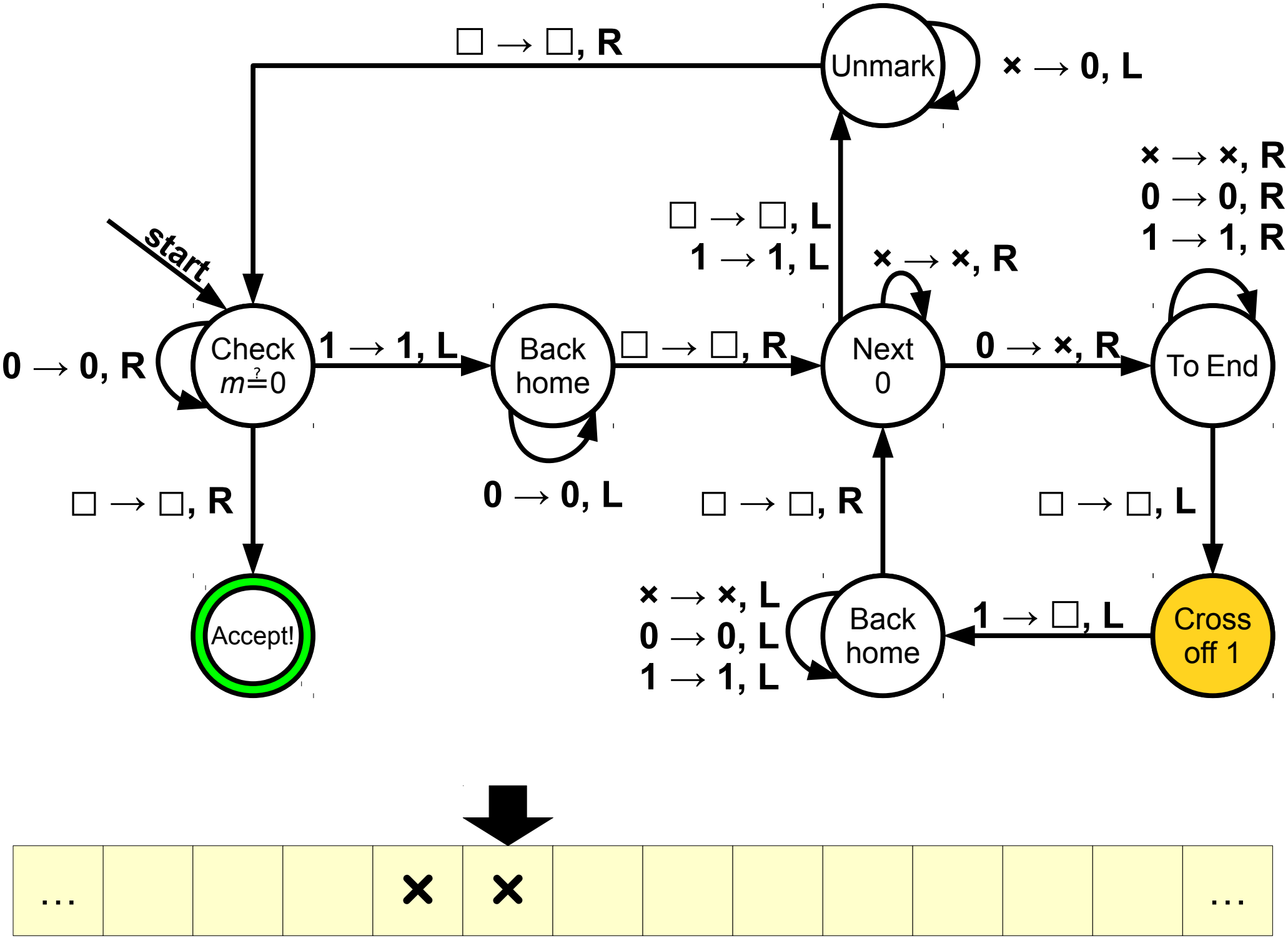
start
Check
m ?= 0
0 → 0, R
1 → 1, L
□ → □, R
Accept!
Back
home
0 → 0, L
□ → □, R
Next
0
□ → □, L
1 → 1, L
× → ×, R
0 → ×, R
Unmark
× → 0, L
□ → □, R
To End
× → ×, R
0 → 0, R
1 → 1, R
□ → □, L
Cross
off 1
1 → □, L
Back
home
× → ×, L
0 → 0, L
1 → 1, L
□ → □, R
…
×
×
…

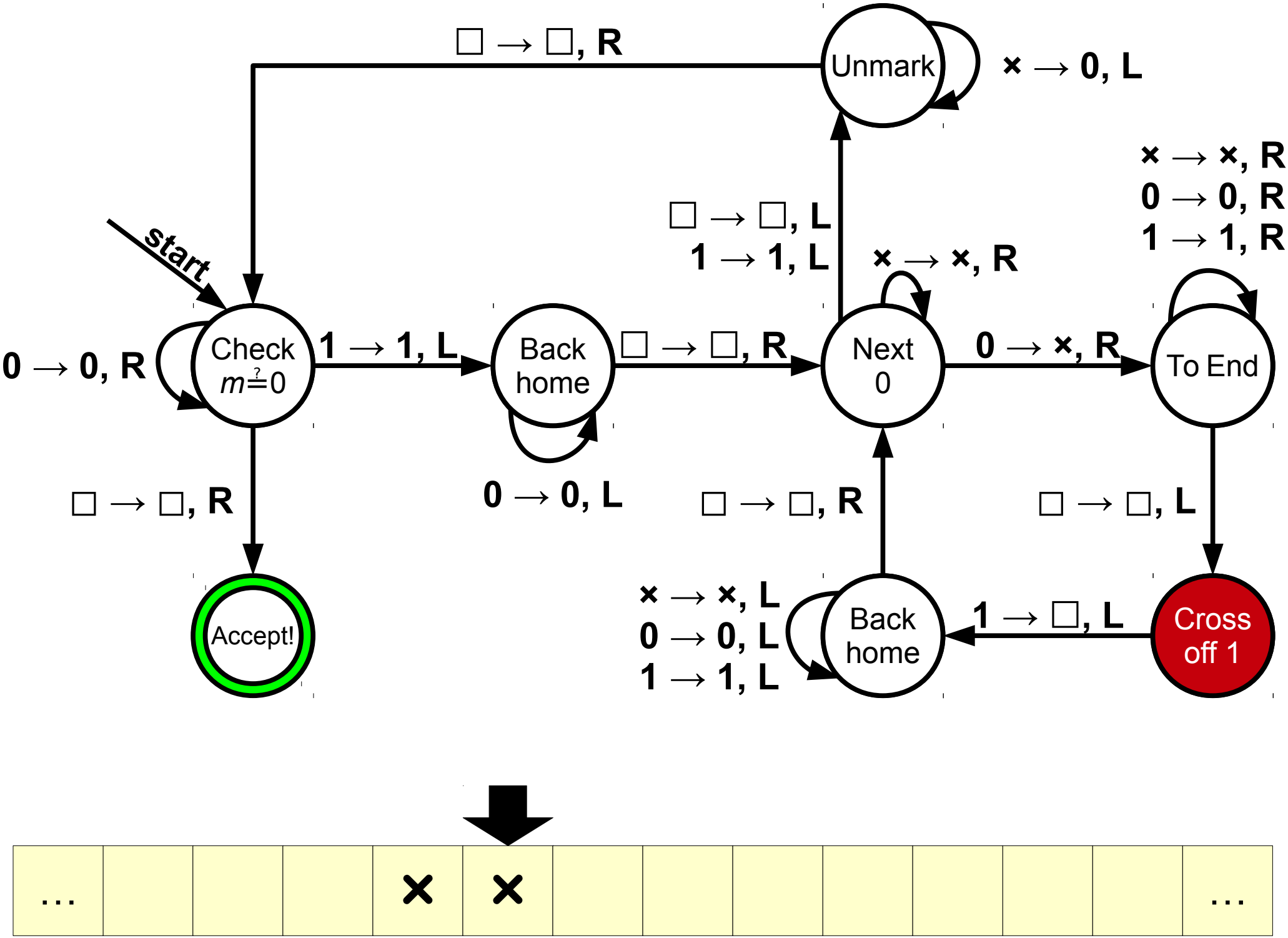
start
Check
m ?= 0
0 → 0, R
1 → 1, L
□ → □, R
Accept!
Back
home
0 → 0, L
□ → □, R
Next
0
□ → □, L
1 → 1, L
× → ×, R
0 → ×, R
Unmark
× → 0, L
□ → □, R
To End
× → ×, R
0 → 0, R
1 → 1, R
□ → □, L
Cross
off 1
1 → □, L
Back
home
× → ×, L
0 → 0, L
1 → 1, L
□ → □, R
…
×
×
…

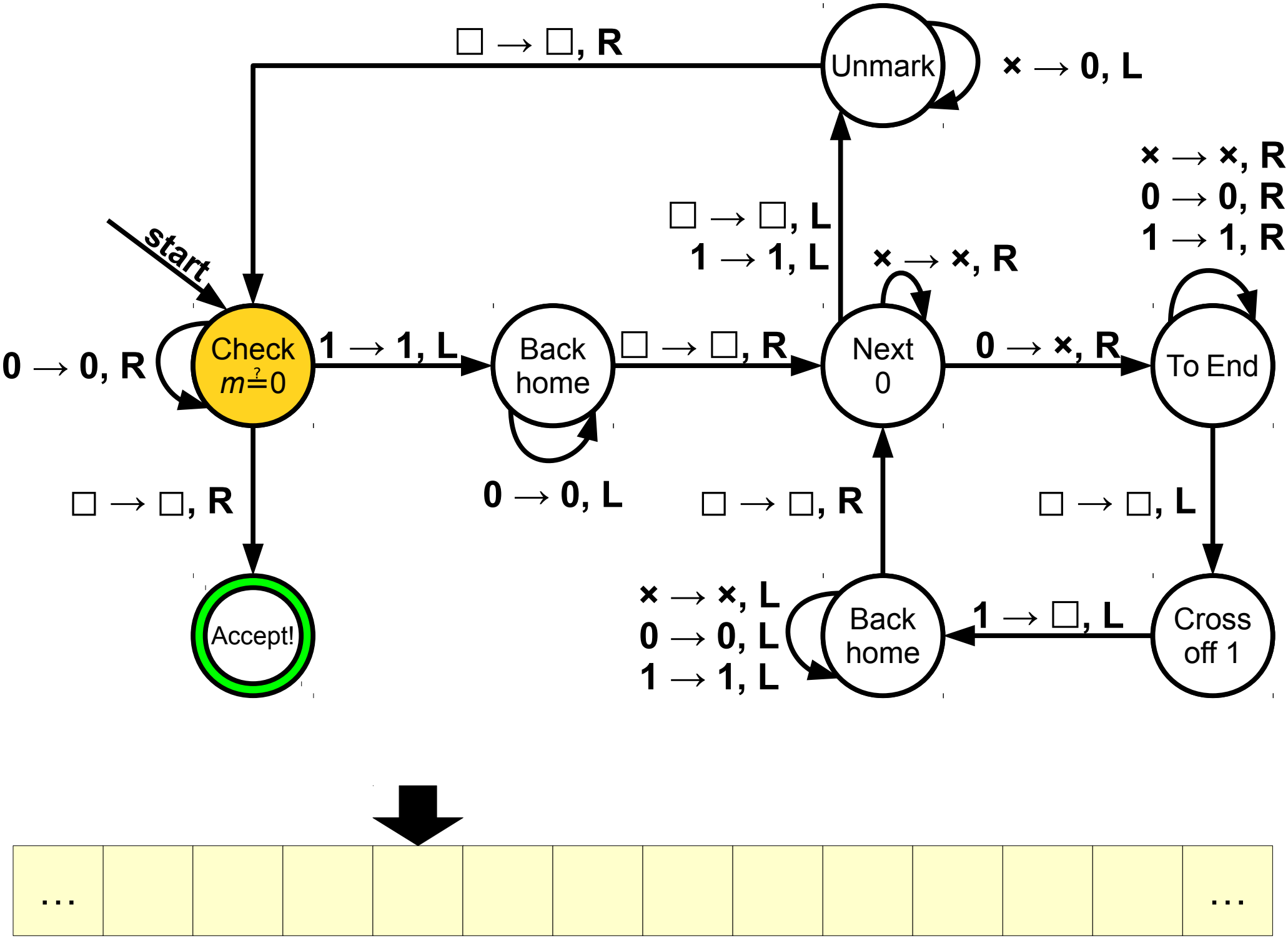
start
Check
m ?= 0
0 → 0, R
1 → 1, L
Back
home
0 → 0, L
□ → □, R
Next
0
× → ×, R
0 → ×, R
To End
× → ×, R
0 → 0, R
1 → 1, R
□ → □, L
Cross
off 1
1 → □, L
Back
home
× → ×, L
0 → 0, L
1 → 1, L
□ → □, R
Unmark
× → 0, L
□ → □, L
1 → 1, L
□ → □, R
Accept!
□ → □, R
…
…

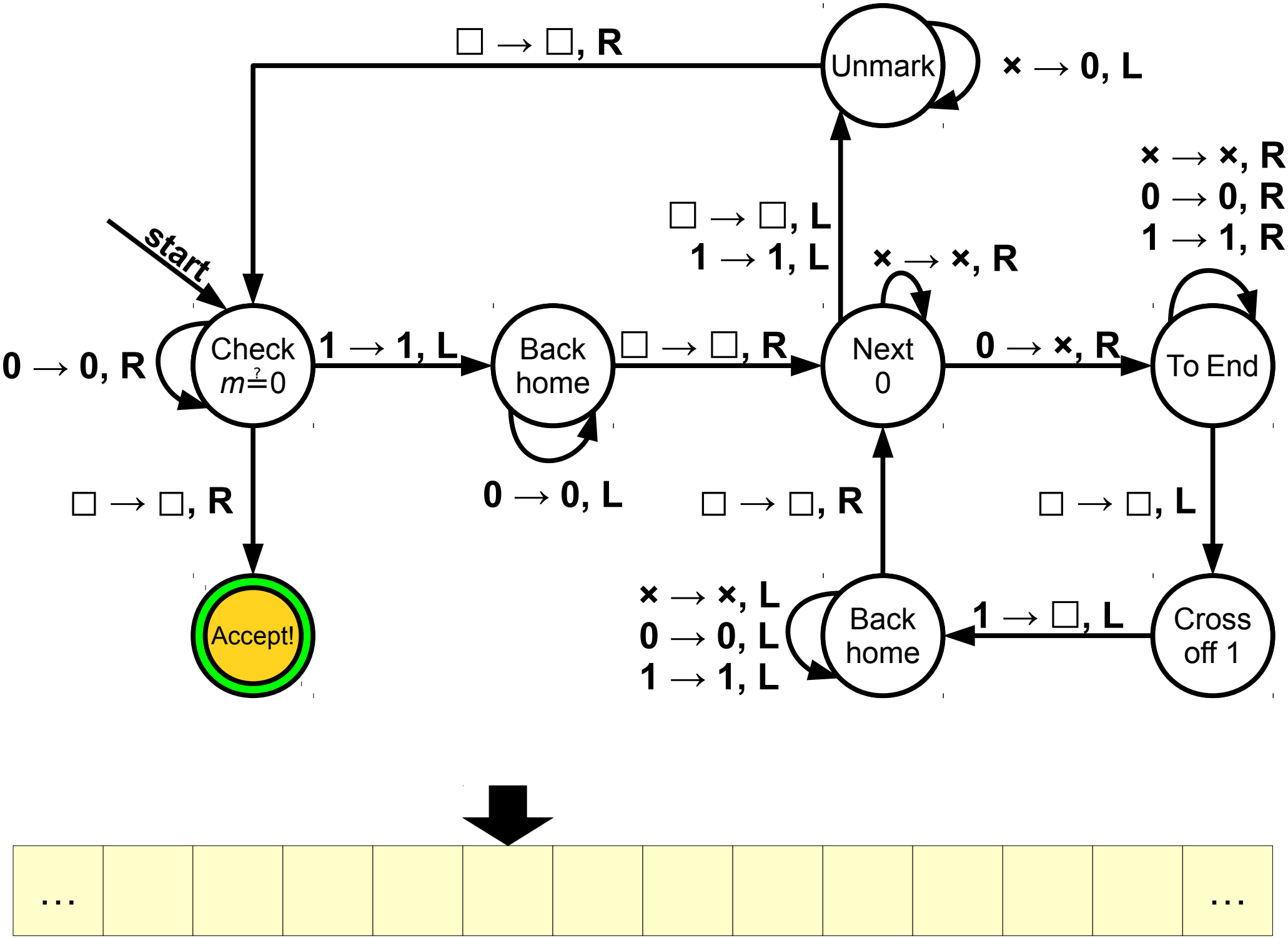
start
Check
m ?= 0
0 → 0, R
1 → 1, L
□ → □, R
Accept!
Back
home
0 → 0, L
□ → □, R
Next
0
□ → □, L
1 → 1, L
× → ×, R
0 → ×, R
Unmark
× → 0, L
□ → □, R
To End
× → ×, R
0 → 0, R
1 → 1, R
□ → □, L
Cross
off 1
1 → □, L
Back
home
× → ×, L
0 → 0, L
1 → 1, L
□ → □, R
…
…

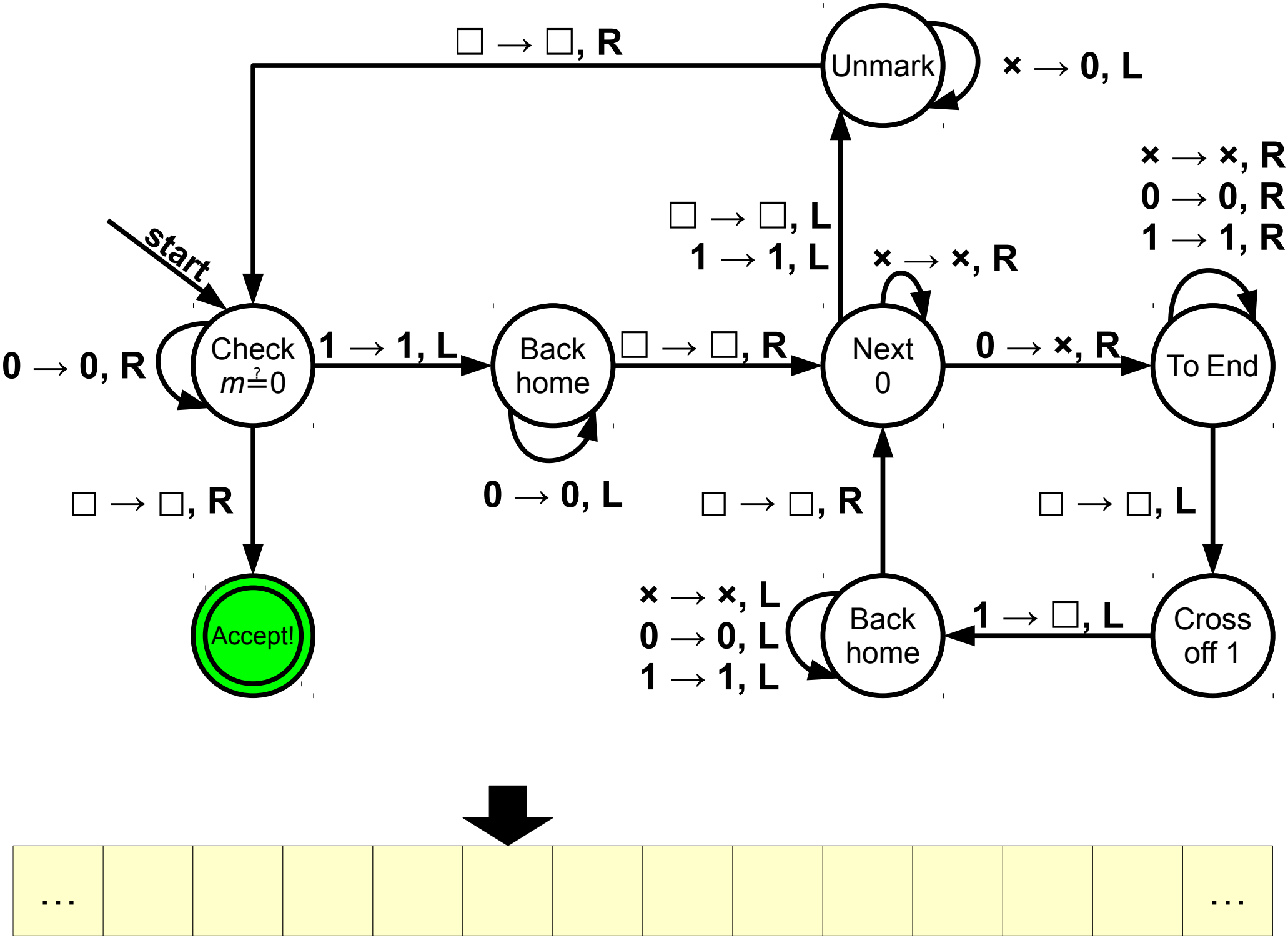
start
Check
m ?= 0
0 → 0, R
□ → □, R
Accept!
1 → 1, L
Back
home
0 → 0, L
□ → □, R
Next
0
× → ×, R
□ → □, L
1 → 1, L
Unmark
× → 0, L
□ → □, R
0 → ×, R
To End
× → ×, R
0 → 0, R
1 → 1, R
□ → □, L
Cross
off 1
1 → □, L
Back
home
× → ×, L
0 → 0, L
1 → 1, L
□ → □, R
…
…

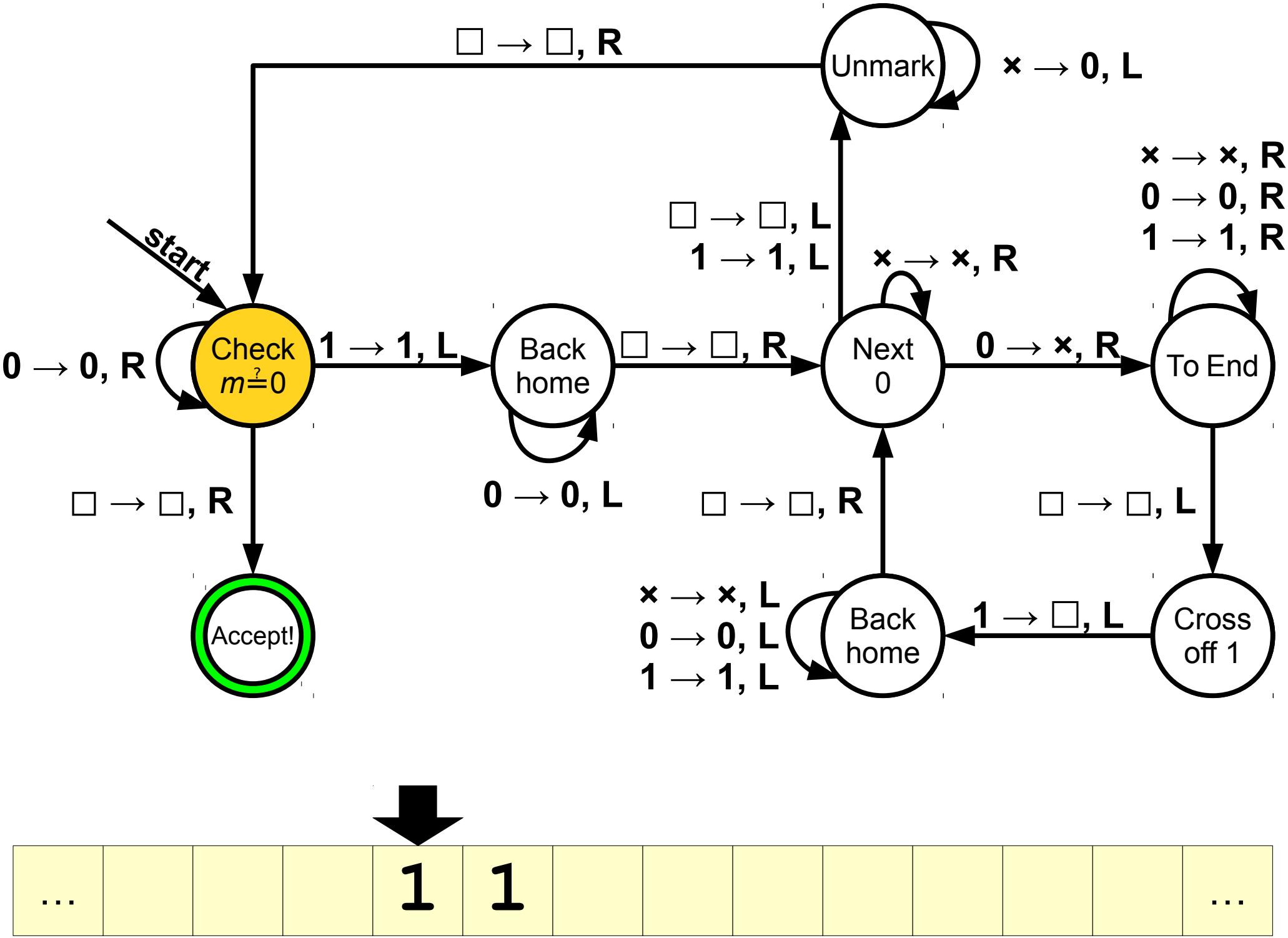
start
Check
m ?= 0
0 → 0, R
1 → 1, L
Back
home
0 → 0, L
□ → □, R
Next
0
× → ×, R
0 → ×, R
To End
× → ×, R
0 → 0, R
1 → 1, R
□ → □, L
Cross
off 1
1 → □, L
Back
home
× → ×, L
0 → 0, L
1 → 1, L
□ → □, R
Unmark
× → 0, L
□ → □, L
1 → 1, L
□ → □, R
Accept!
□ → □, R
1 1
...
...

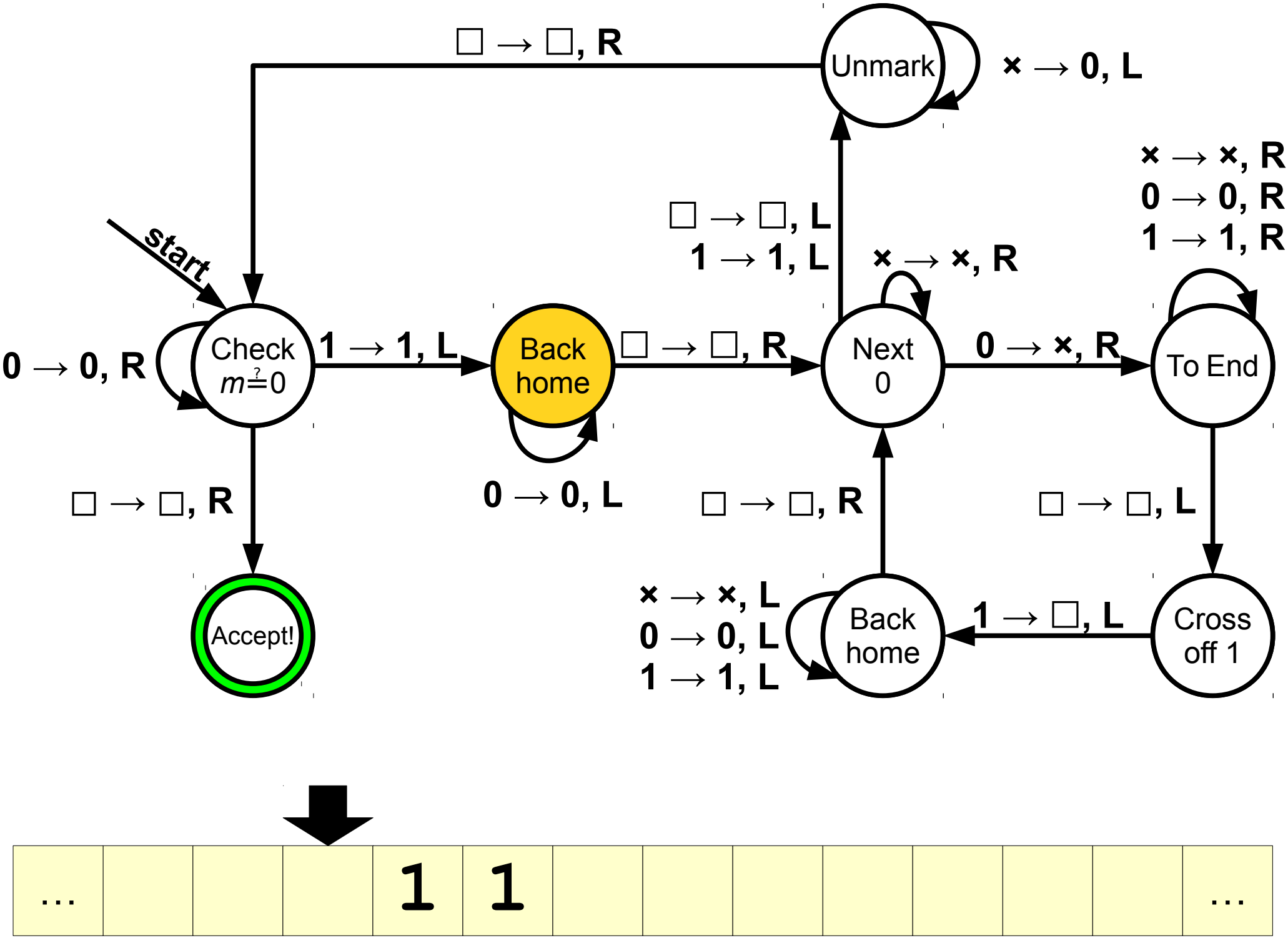
start
Check
m ?= 0
0 → 0, R
1 → 1, L
Back
home
0 → 0, L
□ → □, R
Accept!
□ → □, R
Unmark
× → 0, L
Next
0
× → ×, R
□ → □, L
1 → 1, L
0 → ×, R
To End
× → ×, R
0 → 0, R
1 → 1, R
□ → □, L
Cross
off 1
1 → □, L
Back
home
× → ×, L
0 → 0, L
1 → 1, L
□ → □, R
…
1
1
…

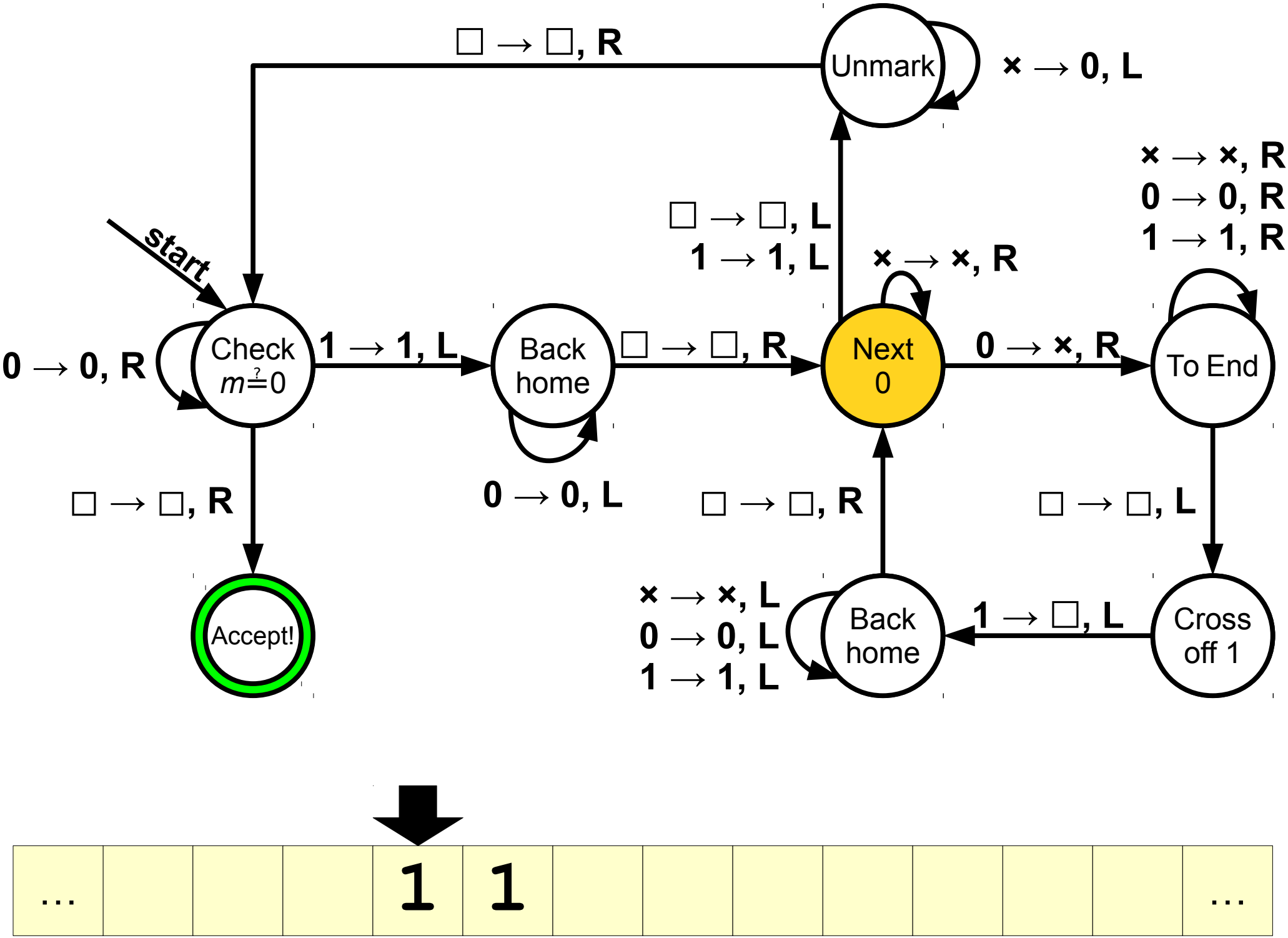
start
Check
m ?= 0
0 → 0, R
1 → 1, L
□ → □, R
Accept!
Back
home
0 → 0, L
□ → □, R
Next
0
□ → □, L
1 → 1, L
× → ×, R
0 → ×, R
Unmark
× → 0, L
□ → □, R
To End
× → ×, R
0 → 0, R
1 → 1, R
□ → □, L
Cross
off 1
1 → □, L
Back
home
× → ×, L
0 → 0, L
1 → 1, L
□ → □, R
…
1
1
…

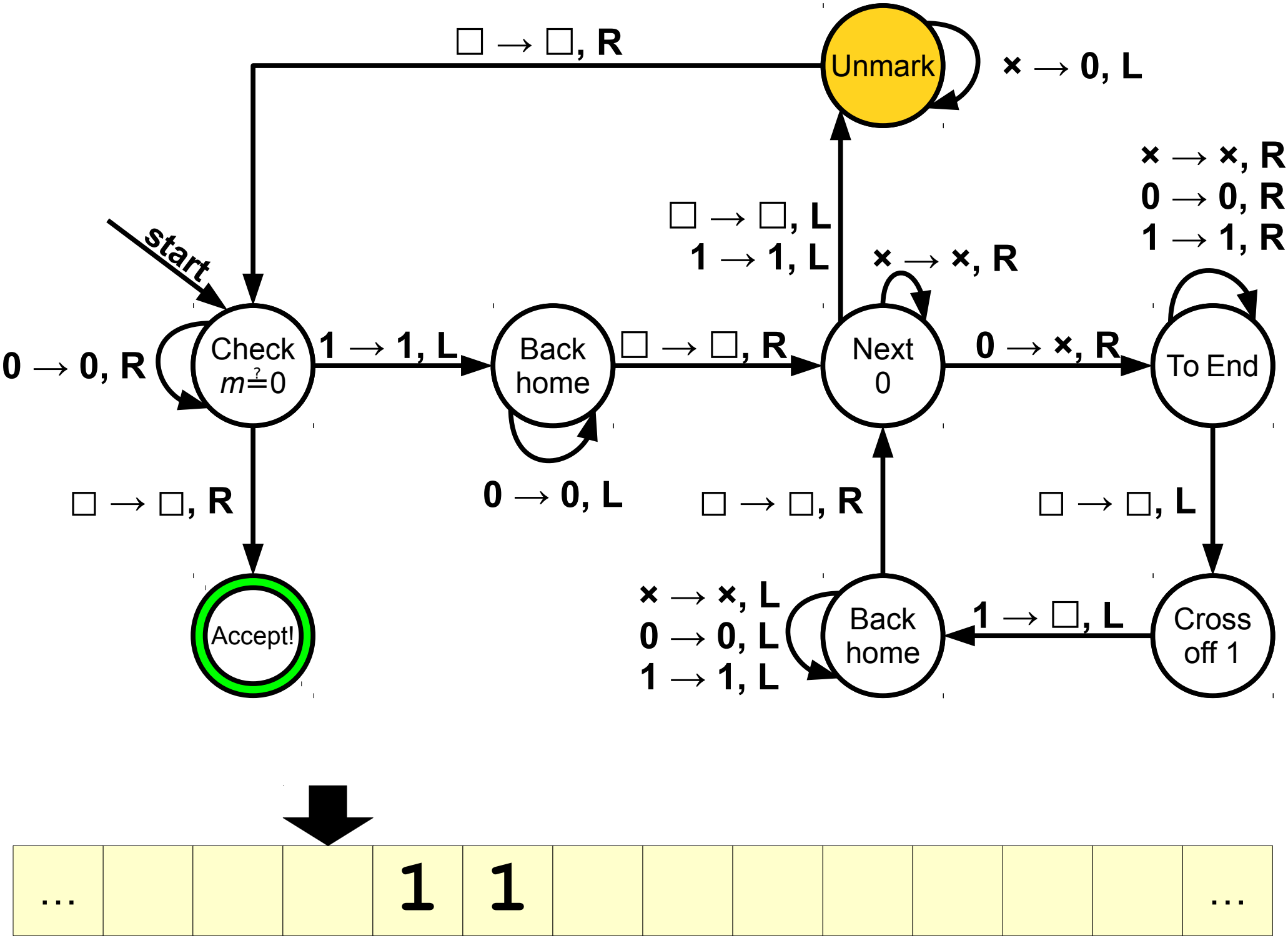
Unmark
□ → □, R
× → 0, L
start
Check
m ?= 0
0 → 0, R
1 → 1, L
Back
home
0 → 0, L
□ → □, R
Next
0
□ → □, L
1 → 1, L
× → ×, R
0 → ×, R
To End
× → ×, R
0 → 0, R
1 → 1, R
□ → □, R
Accept!
□ → □, R
Back
home
× → ×, L
0 → 0, L
1 → 1, L
1 → □, L
Cross
off 1
□ → □, L
…
1
1
…

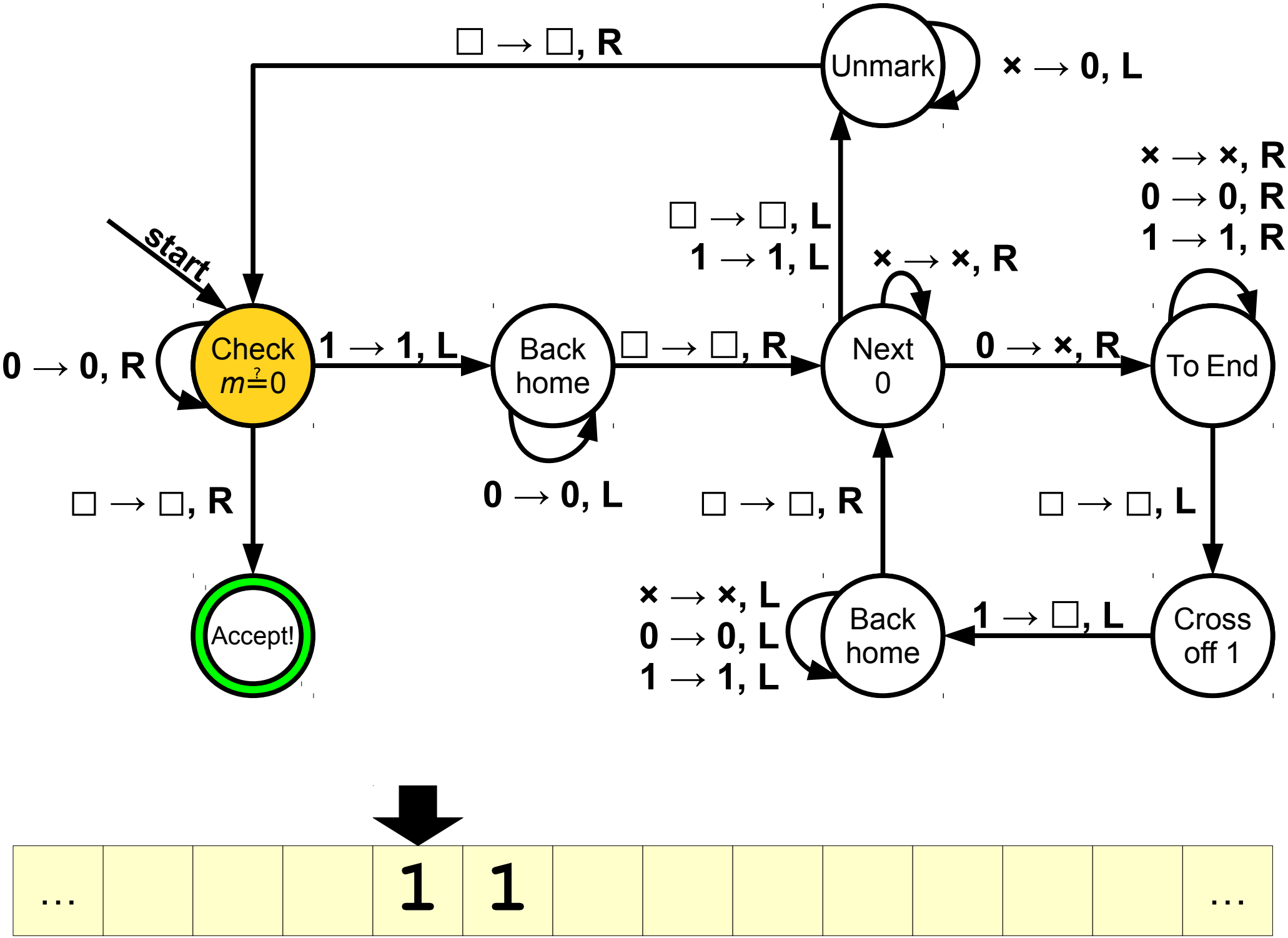
start
Check
m ?= 0
0 → 0, R
1 → 1, L
Back
home
0 → 0, L
□ → □, R
Next
0
× → ×, R
0 → ×, R
To End
× → ×, R
0 → 0, R
1 → 1, R
□ → □, L
Cross
off 1
1 → □, L
Back
home
× → ×, L
0 → 0, L
1 → 1, L
□ → □, R
Unmark
× → 0, L
□ → □, L
1 → 1, L
□ → □, R
Accept!
□ → □, R
1 1
...
...

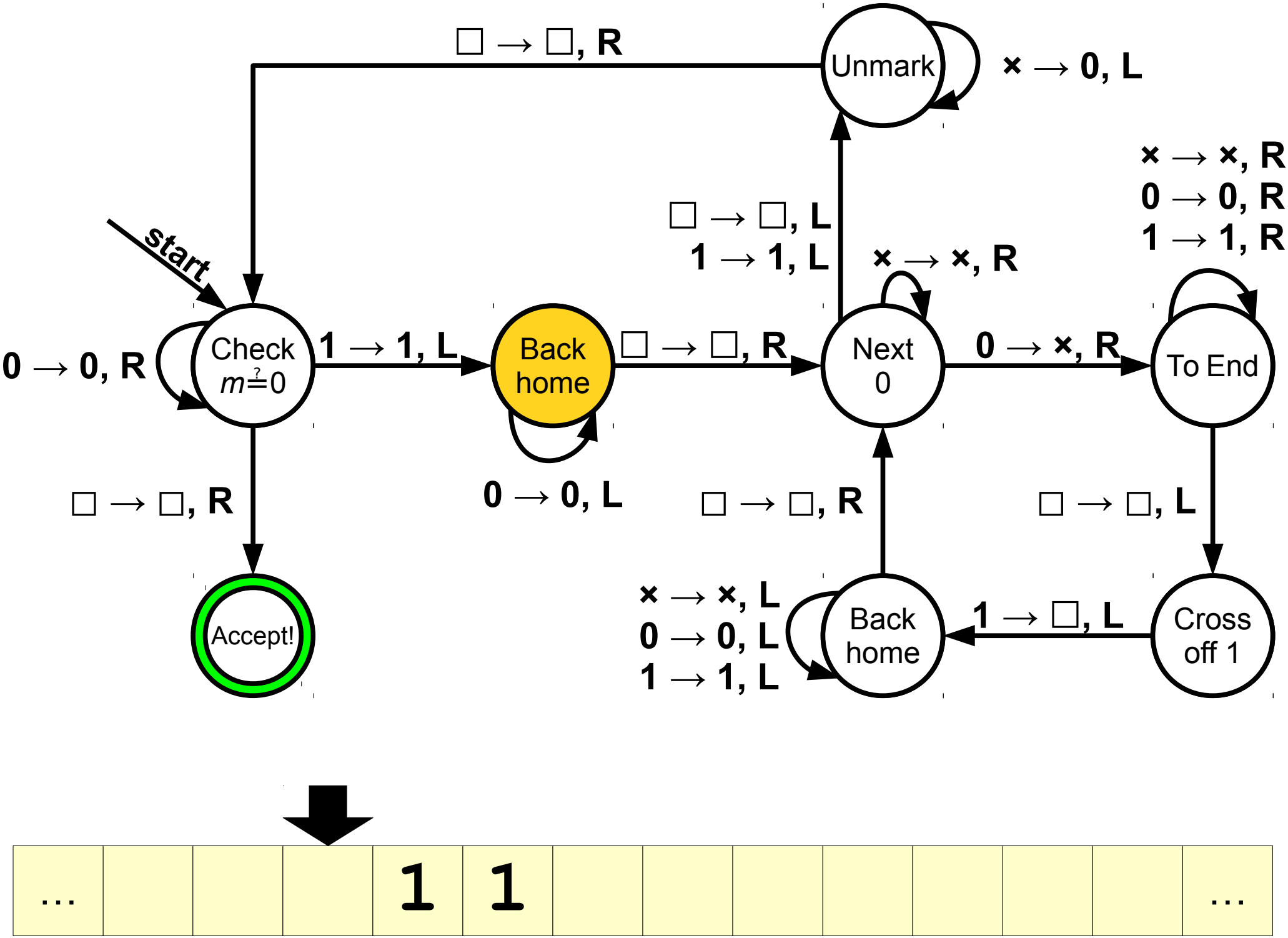
start
Check
m ?= 0
0 → 0, R
1 → 1, L
Back
home
0 → 0, L
□ → □, R
Accept!
□ → □, R
Unmark
× → 0, L
Next
0
× → ×, R
□ → □, L
1 → 1, L
0 → ×, R
To End
× → ×, R
0 → 0, R
1 → 1, R
□ → □, L
Cross
off 1
1 → □, L
Back
home
× → ×, L
0 → 0, L
1 → 1, L
□ → □, R
…
1
1
…

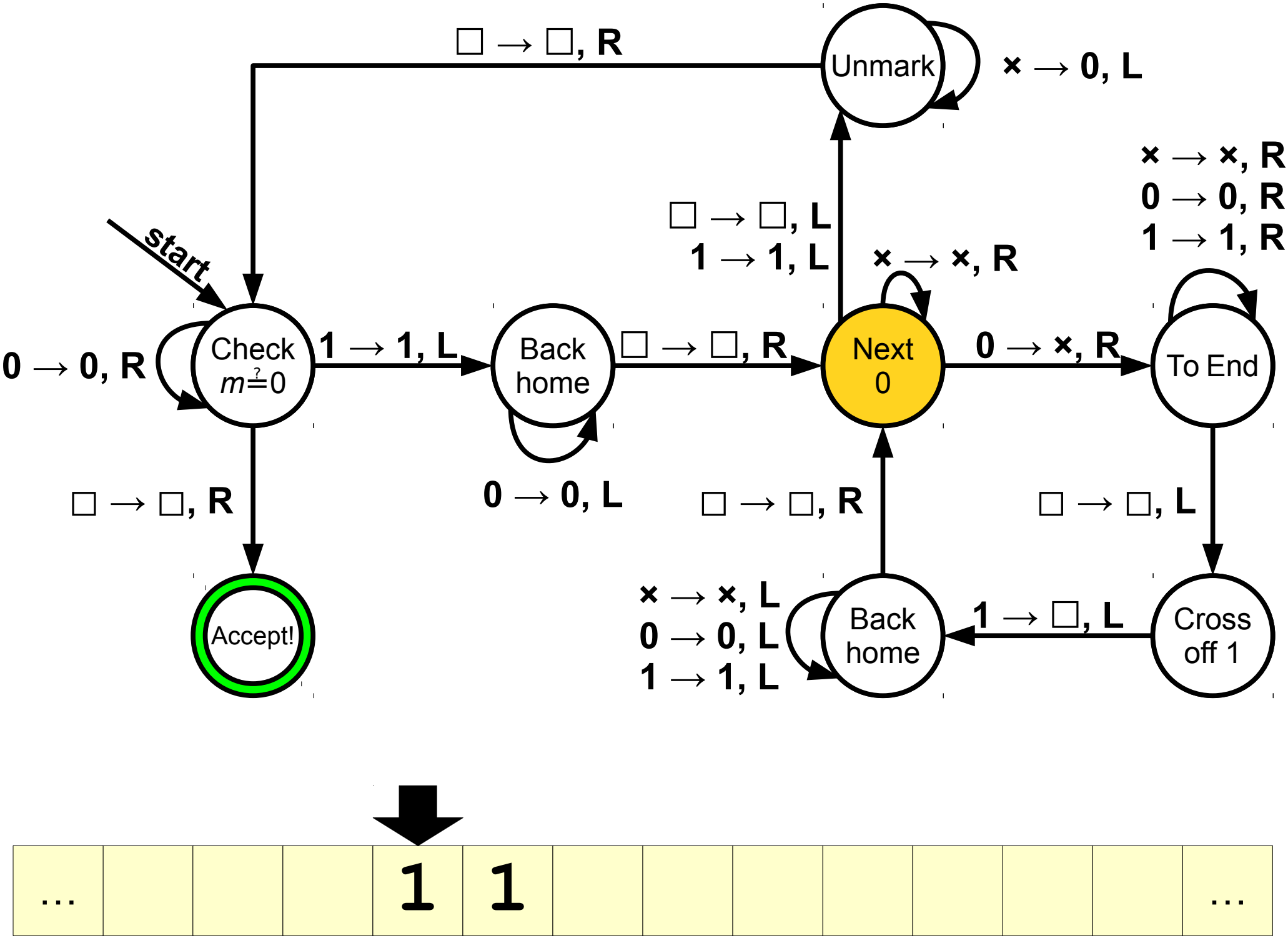
start
Check
m ?= 0
0 → 0, R
1 → 1, L
□ → □, R
Accept!
Back
home
0 → 0, L
□ → □, R
Next
0
□ → □, L
1 → 1, L
× → ×, R
0 → ×, R
Unmark
× → 0, L
□ → □, R
To End
× → ×, R
0 → 0, R
1 → 1, R
□ → □, L
Cross
off 1
1 → □, L
Back
home
× → ×, L
0 → 0, L
1 → 1, L
□ → □, R
…
1
1
…

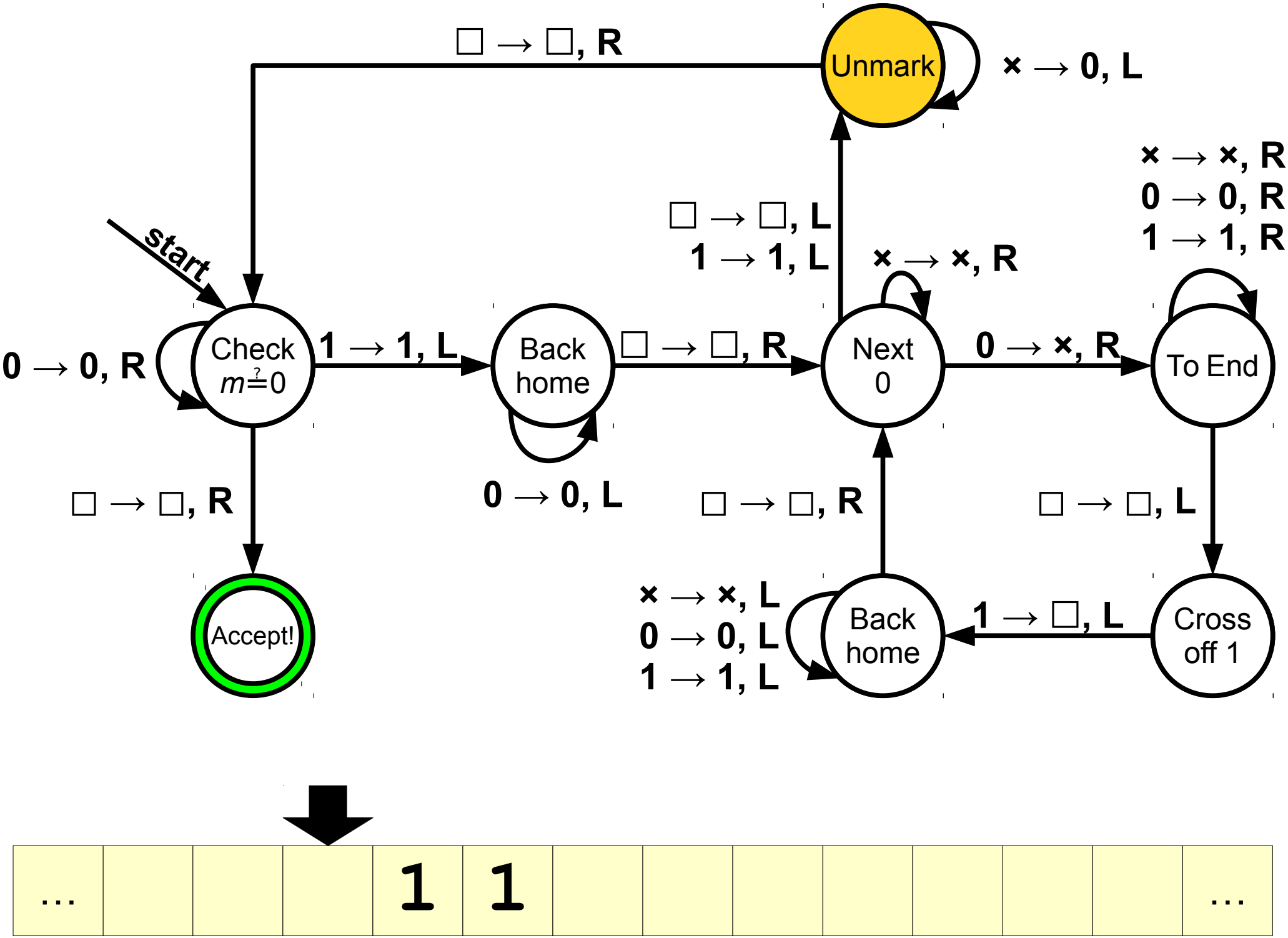
Unmark
□ → □, R
× → 0, L
start
Check
m ?= 0
0 → 0, R
1 → 1, L
Back
home
0 → 0, L
□ → □, R
Next
0
□ → □, L
1 → 1, L
× → ×, R
0 → ×, R
To End
× → ×, R
0 → 0, R
1 → 1, R
□ → □, R
Accept!
□ → □, R
Back
home
× → ×, L
0 → 0, L
1 → 1, L
1 → □, L
Cross
off 1
□ → □, L
…
1
1
…

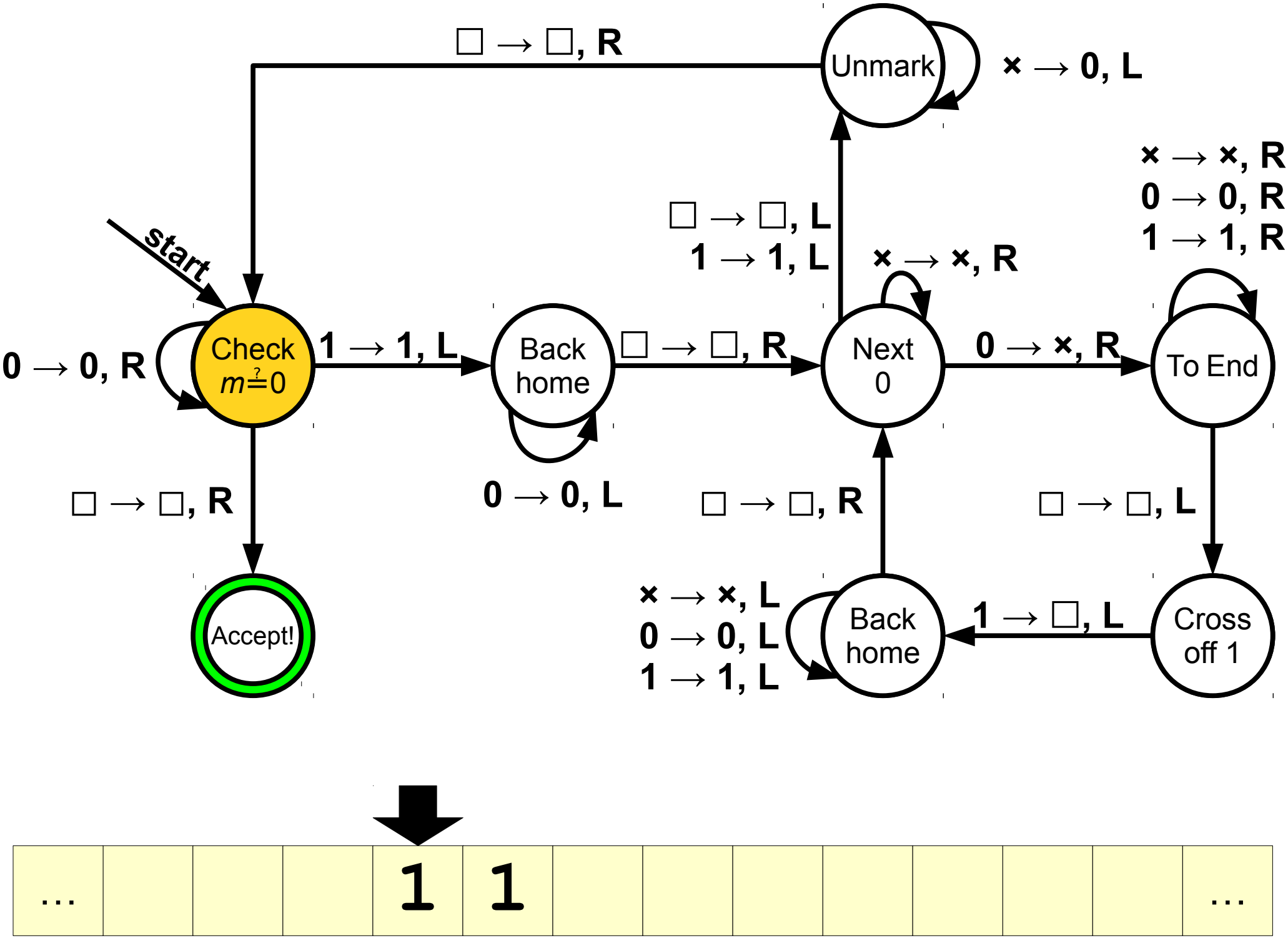
start
Check
m ?= 0
0 → 0, R
1 → 1, L
Back
home
0 → 0, L
□ → □, R
Next
0
× → ×, R
0 → ×, R
To End
× → ×, R
0 → 0, R
1 → 1, R
□ → □, L
Cross
off 1
1 → □, L
Back
home
× → ×, L
0 → 0, L
1 → 1, L
□ → □, R
Unmark
× → 0, L
□ → □, L
1 → 1, L
□ → □, R
Accept!
□ → □, R
1 1
...
...

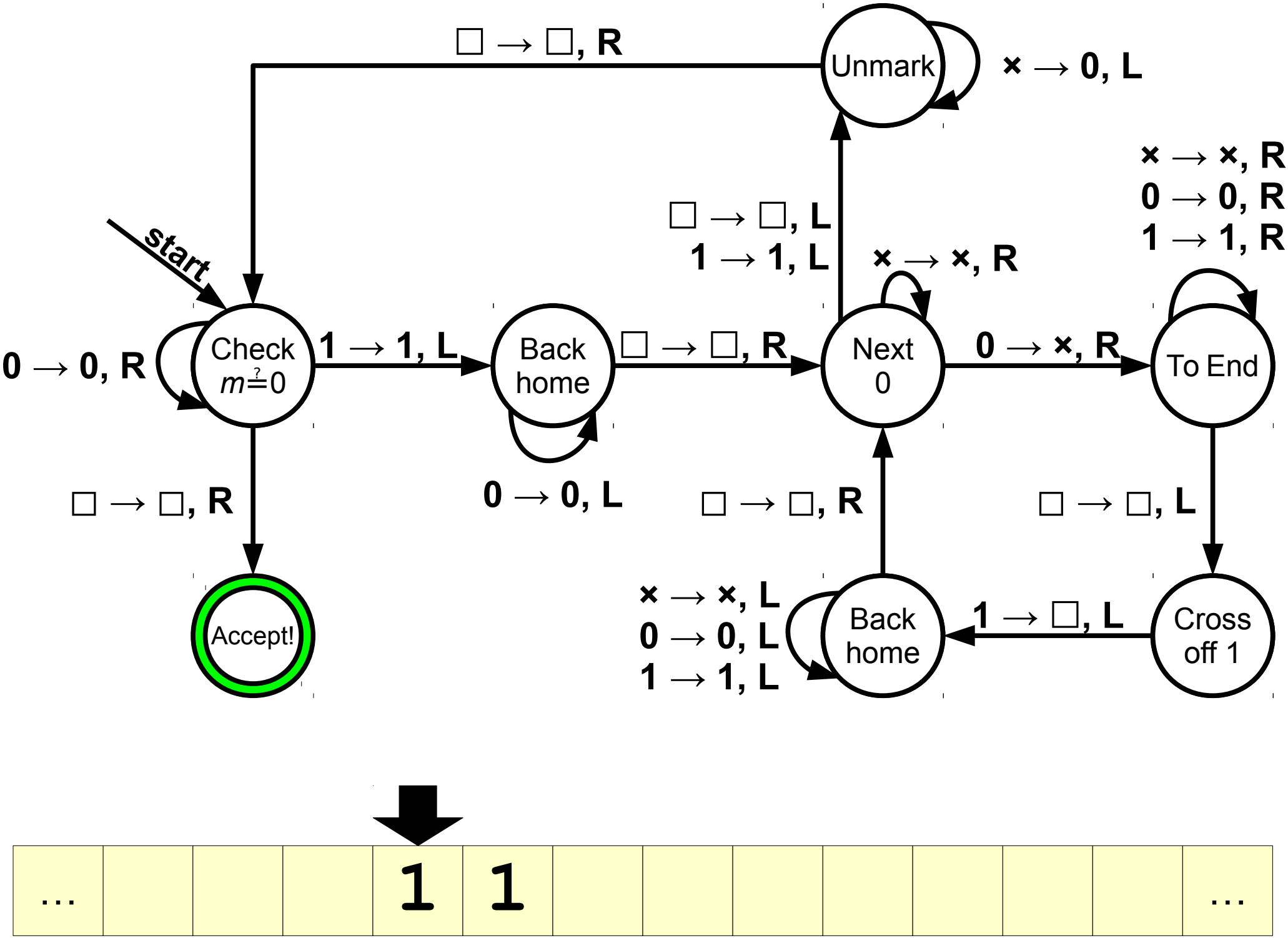
start
Check
m ?= 0
0 → 0, R
1 → 1, L
□ → □, R
Accept!
Back
home
0 → 0, L
□ → □, R
Next
0
□ → □, L
1 → 1, L
× → ×, R
0 → ×, R
Unmark
× → 0, L
□ → □, R
To End
× → ×, R
0 → 0, R
1 → 1, R
□ → □, L
Cross
off 1
1 → □, L
Back
home
× → ×, L
0 → 0, L
1 → 1, L
□ → □, R
…
1
1
…

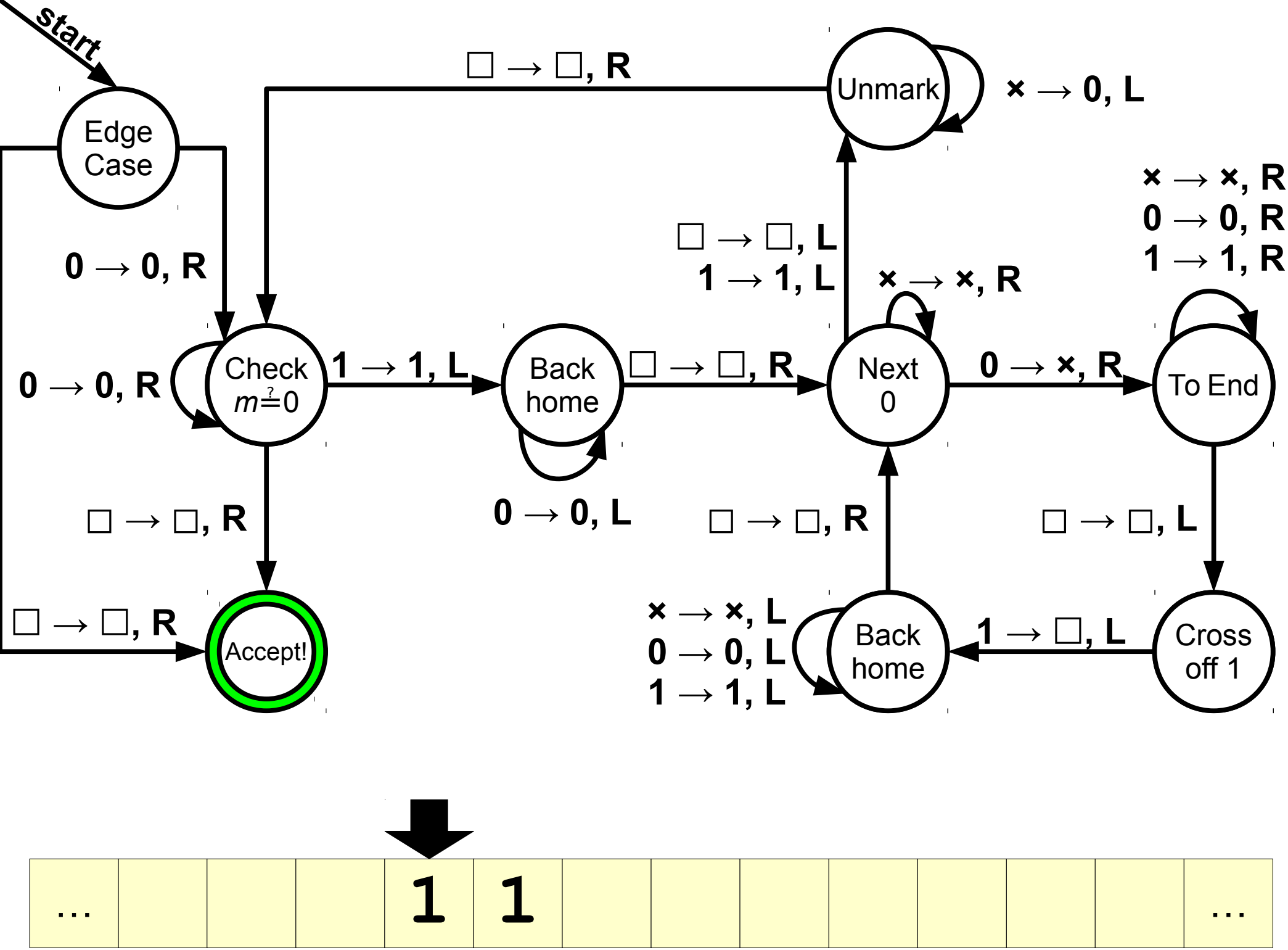
start
Edge Case
0 → 0, R
Check m ?= 0
0 → 0, R
□ → □, R
Accept!
□ → □, R
1 → 1, L
Back home
0 → 0, L
□ → □, R
Unmark
× → 0, L
□ → □, L
1 → 1, L
Next 0
× → ×, R
0 → ×, R
To End
× → ×, R
0 → 0, R
1 → 1, R
□ → □, L
Cross off 1
1 → □, L
Back home
× → ×, L
0 → 0, L
1 → 1, L
□ → □, R
… 1 1 …

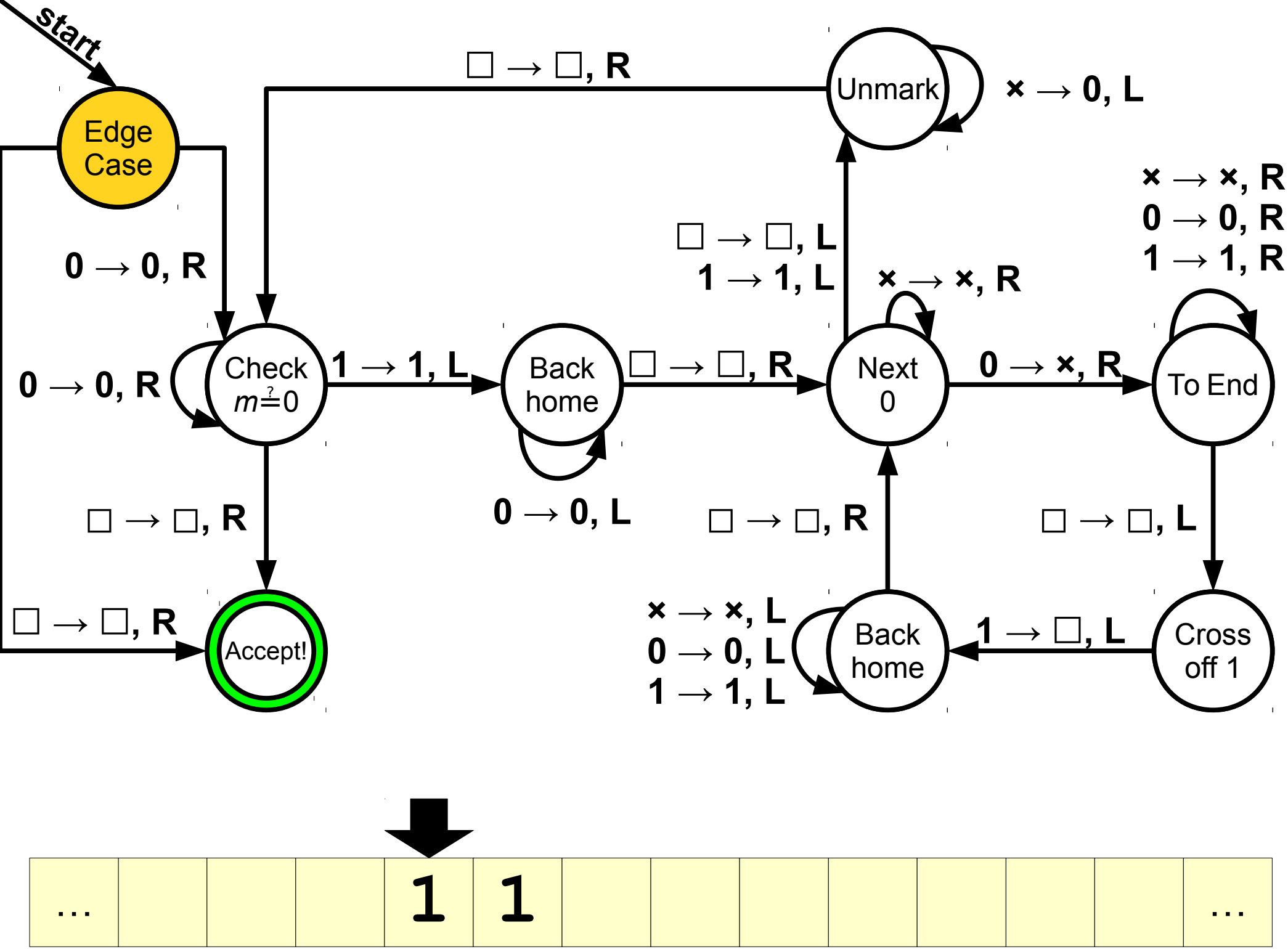
start
Edge Case
0 → 0, R
0 → 0, R
Check m ?= 0
□ → □, R
Accept!
□ → □, R
1 → 1, L
Back home
0 → 0, L
□ → □, R
Unmark
× → 0, L
□ → □, L
1 → 1, L
Next 0
× → ×, R
0 → ×, R
× → ×, R
0 → 0, R
1 → 1, R
To End
□ → □, L
Cross off 1
1 → □, L
Back home
× → ×, L
0 → 0, L
1 → 1, L
□ → □, R
1 1
...
...

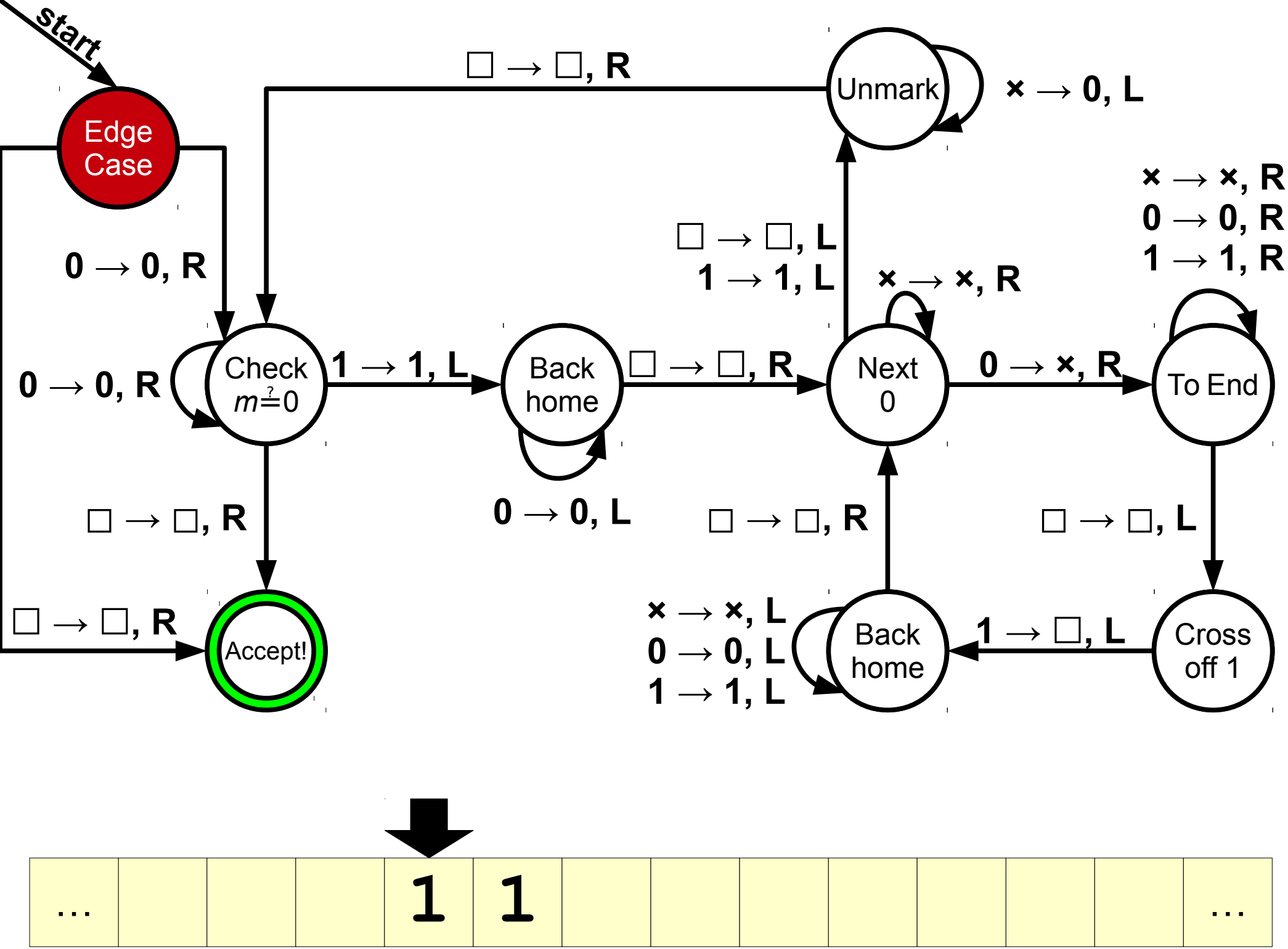
start
Edge Case
0 → 0, R
0 → 0, R
Check m=?0
□ → □, R
Accept!
□ → □, R
1 → 1, L
Back home
0 → 0, L
□ → □, R
Unmark
× → 0, L
□ → □, L
1 → 1, L
Next 0
× → ×, R
0 → ×, R
× → ×, R
0 → 0, R
1 → 1, R
To End
□ → □, L
Cross off 1
1 → □, L
Back home
× → ×, L
0 → 0, L
1 → 1, L
□ → □, R
... 1 1 ...

Concepts from Today

- Turing machines are a generalization of finite automata equipped with an infinite tape.
- It's often helpful to think recursively when designing Turing machines.
- It's often helpful to introduce new symbols into the tape alphabet.
- Watch for edge cases that might lead to infinite loops – though we'll say more about that later on.

Next Time

- **TM Subroutines**
  - Combining multiple TMs together!
- **The Church-Turing Thesis**
  - Just how powerful *are* Turing machines?
- **Objects and Encodings**
  - Computing on graphs, images, etc.