Warmup

Draw the schematic for this circuit:

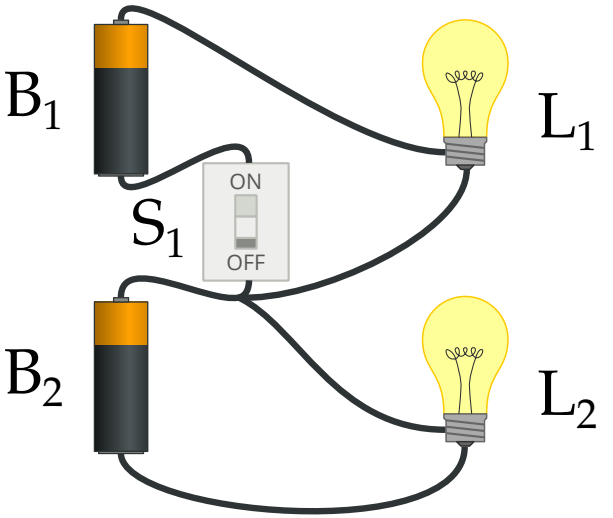

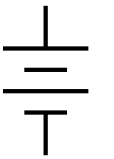

Battery

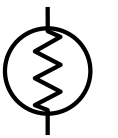

Light bulb

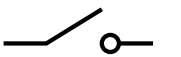

Switch

Which components are in parallel?

Go to **menti.com** and use code **32 61 51**

ENGR 40M, Lecture 2:

KVL, KCL, Ohm's law, and power

Steven Bell

28 June 2017

Stanford University

Logistics

Fill out the lab section signup by Friday

Lab 1 will be posted online tomorrow

Sign up on Piazza!

Go to a soldering lab, if you haven't already

Objectives

By the end of class, you should be able to:

Explain Kirchoff's Voltage Law and Kirchoff's Current Law qualitatively and mathematically.

Given a circuit of block elements with known voltages and/or currents, determine the unknown voltages and currents using KVL/KCL.

Use Ohm's law with KVL/KCL to find unknown voltages and currents.

Calculate the power supplied or dissipated by a device.

Labeling current

3 marbles/sec

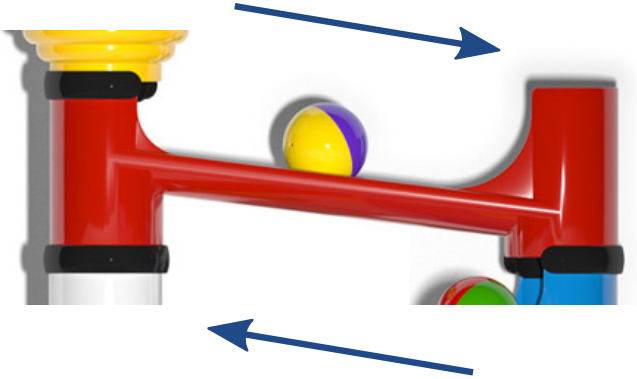

-3 marbles/sec

Labeling current

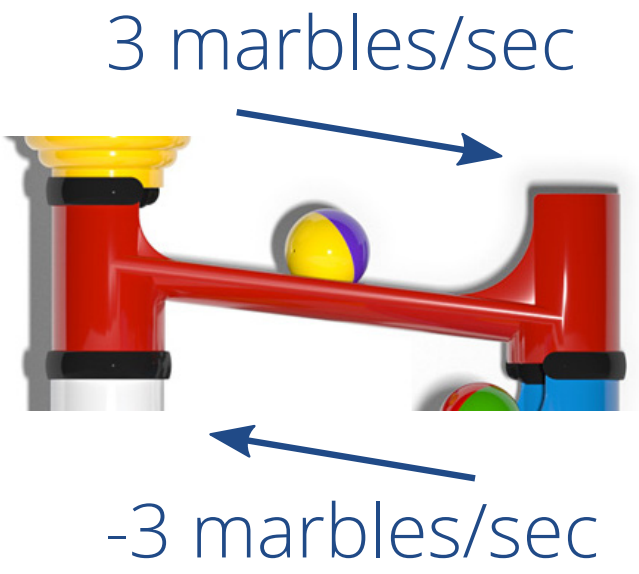

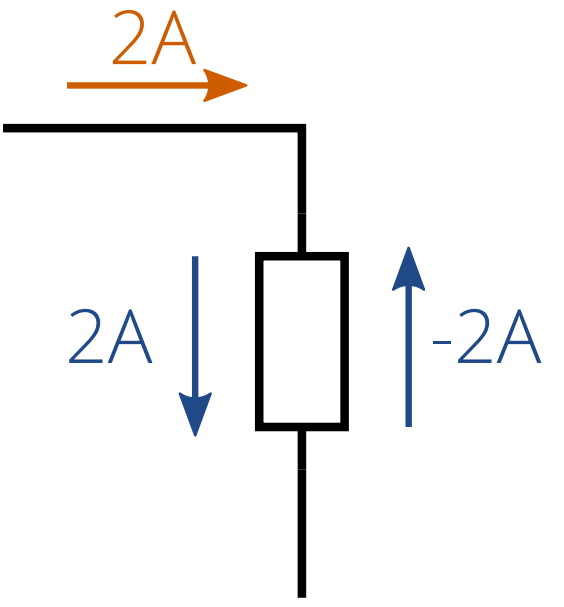

Labels alone do not indicate direction.
You must also consider the sign!

Labeling voltage

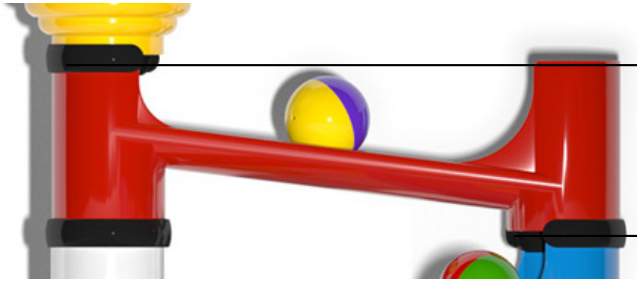

+ (top) — − (bottom)

2.4 cm **-2.4 cm**

− (bottom) — + (top)

Labeling voltage

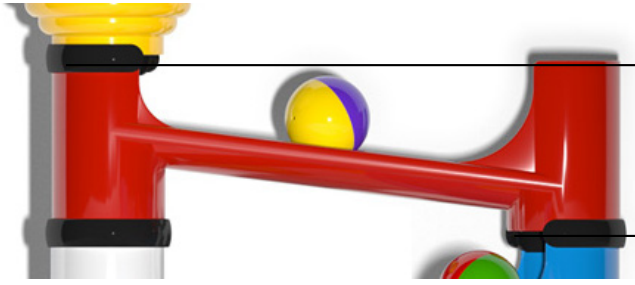

+ (top) — − (bottom)

2.4 cm **-2.4 cm**

− (bottom) — + (top)

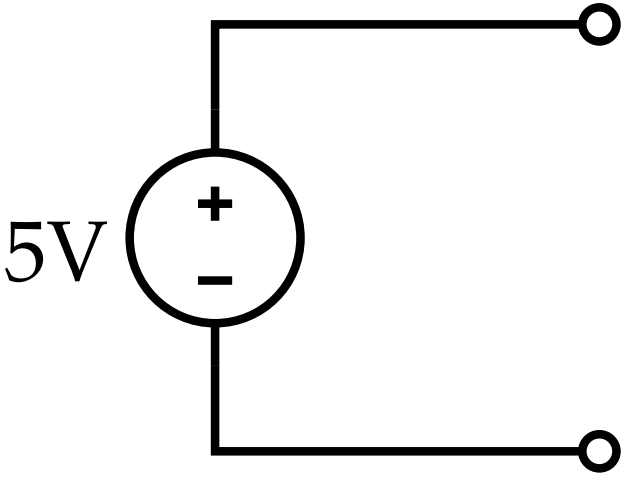

+ (top) − (bottom)

5V **-5V**

− (bottom) + (top)

What is the voltage V_1 and the current i_1?

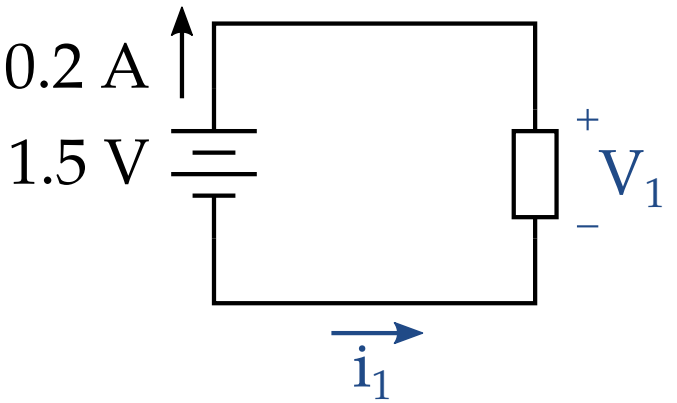

Go to **menti.com** and use code **32 61 51**

Kirchoff's Current Law

Current that goes in must come out.
It can't pile up anywhere or just disappear.

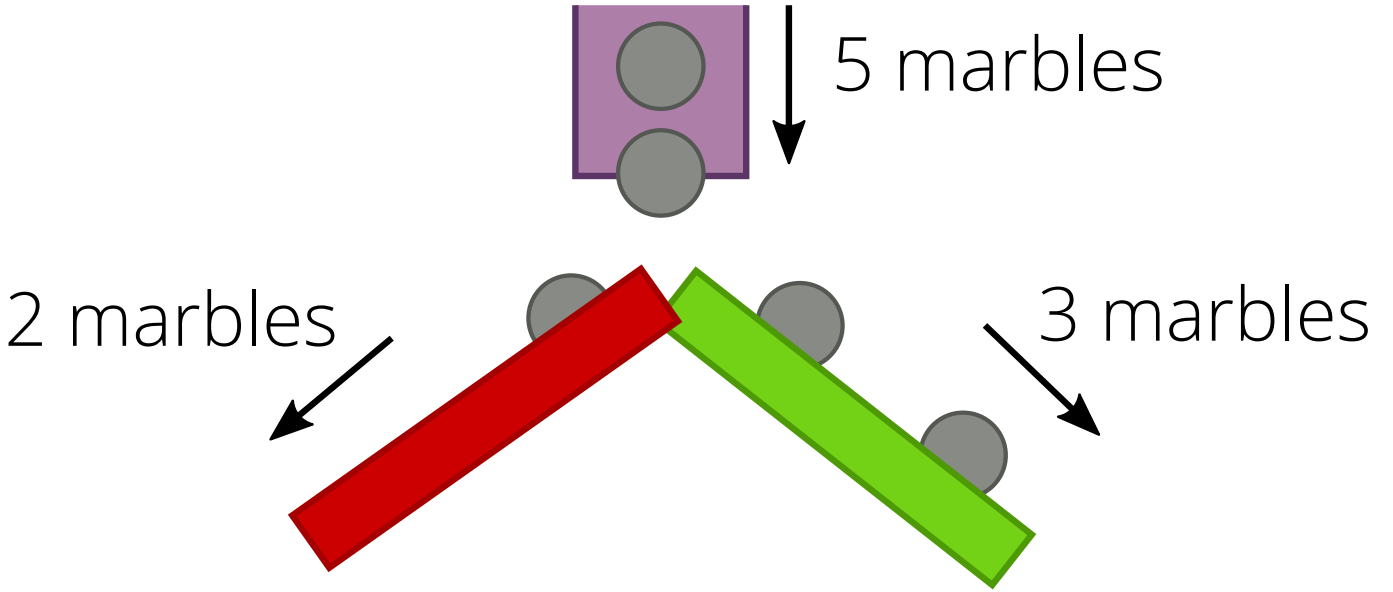

Kirchoff's Current Law

The sum of currents going into a node is zero.

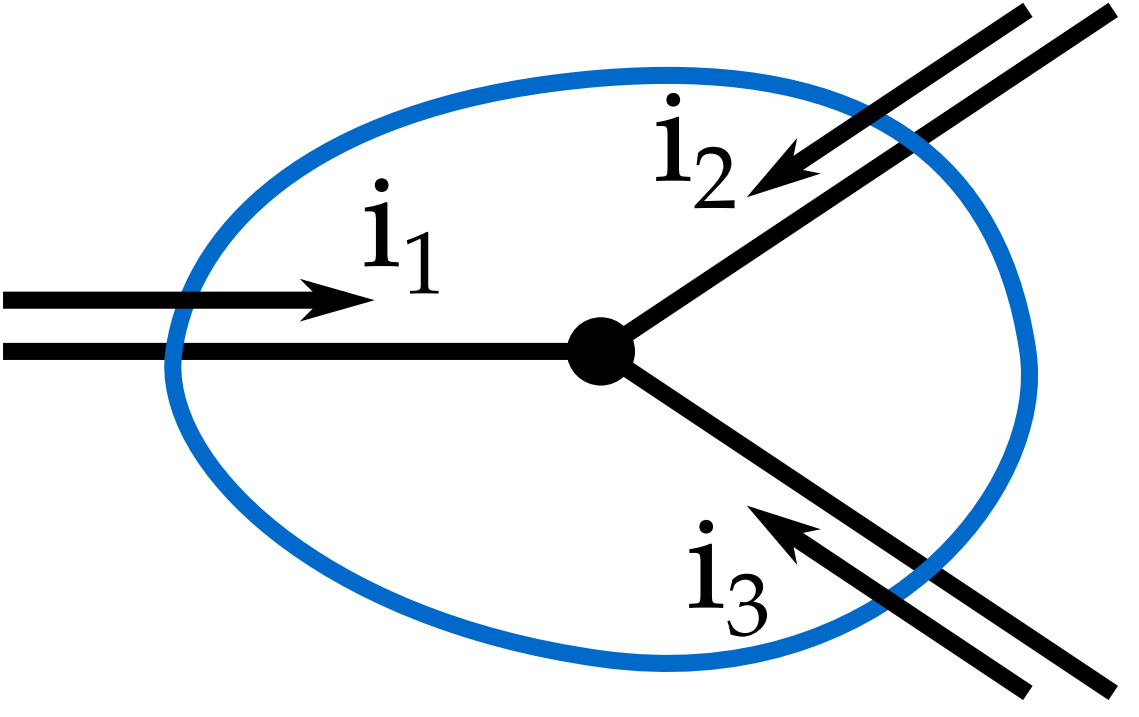

Write all the KCL equations you can:

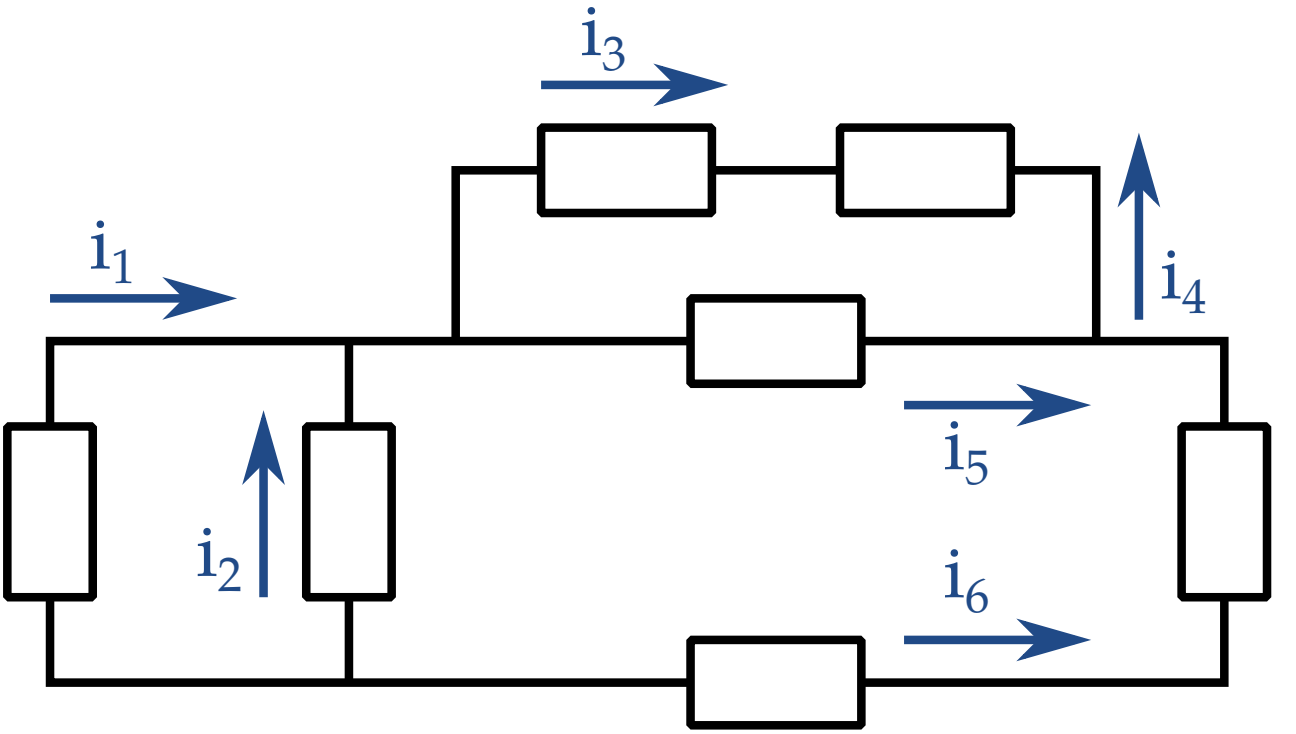

Kirchoff's Voltage Law

If you go around a complete loop, the total height must be zero (because you're back where you started).

Kirchoff's Voltage Law

The sum of voltages around any loop is zero.

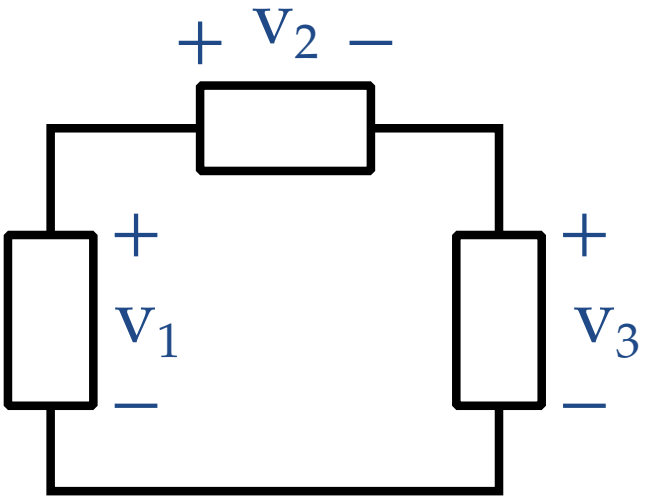

The only tricky part is being consistent with the signs.

Write all the KVL equations you can:

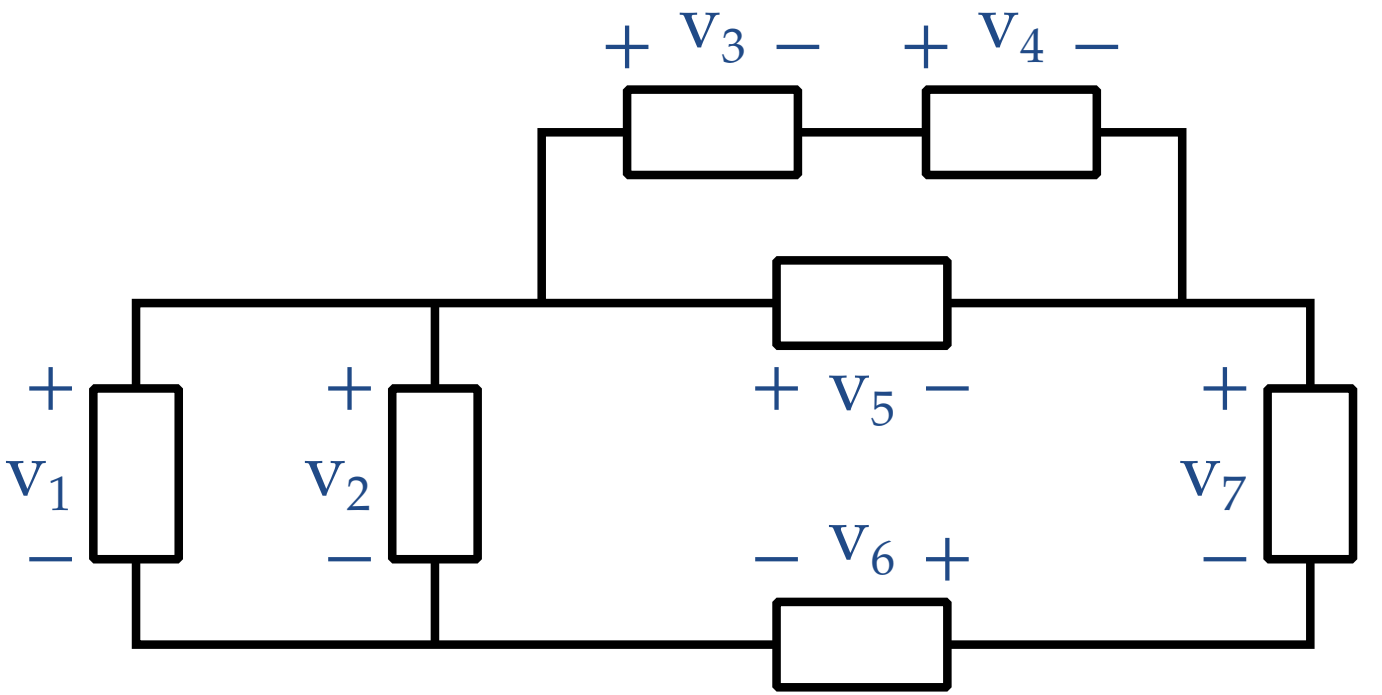

Find the voltage V_2 and current i_2:

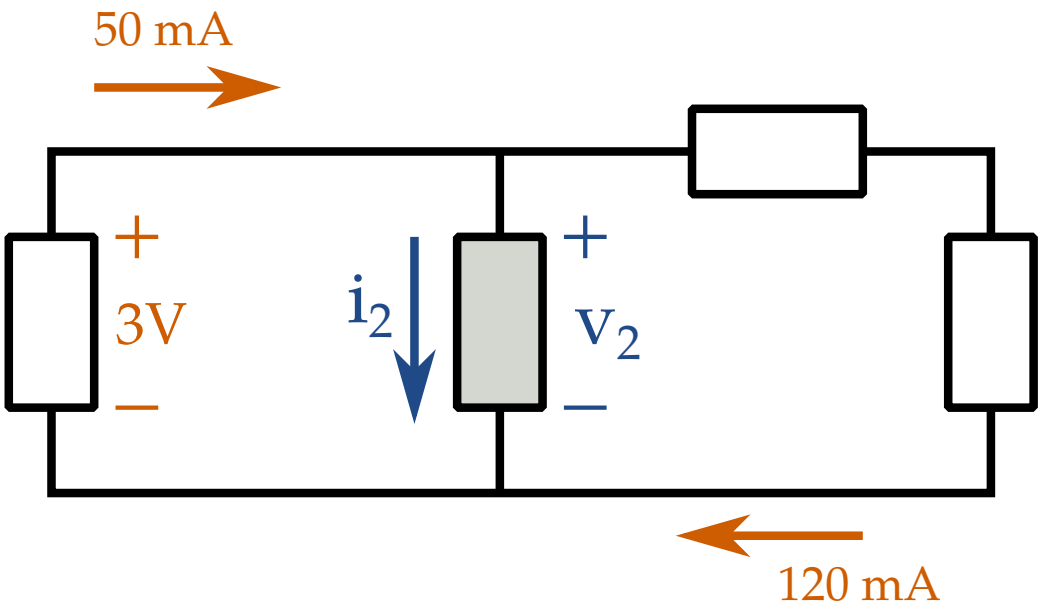

Find the voltage V_2 and current i_2

Challenge question: is the gray element absorbing or supplying electrical energy?

Which bulb lights up first?

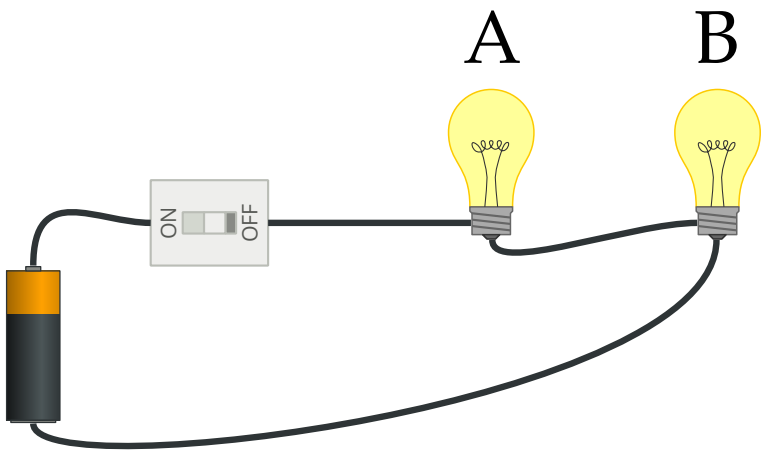

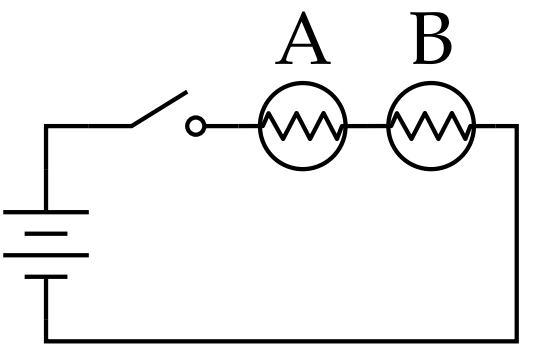

When the switch is closed (turned on):

A) the one on the **left** lights up first.
B) the one on the **right** lights up first.
C) **both** light up at exactly the same time.
D) this is a trick question; **neither** bulb lights up.

Why does the light bulb light up?

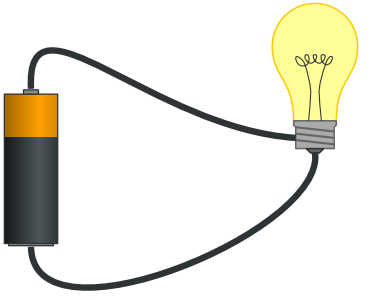

The filament gets hot and glows because:

A) the current is used up in the light bulb, becoming heat.
B) the voltage accelerates electrons and they collide with the metal, losing their energy as heat.
C) charges pile up inside the filament, and the repulsion of their electric fields creates heat.
D) this is a trick question; the light bulb doesn't light up.

Collecting energy from marbles

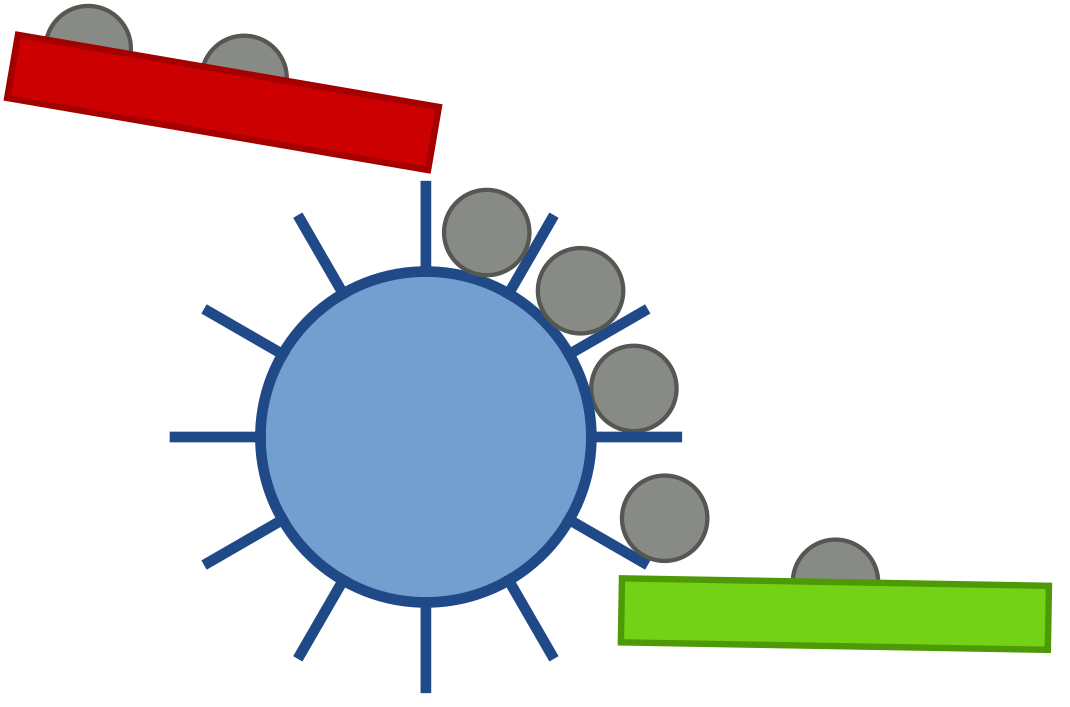

What determines how much energy I get?

$$V = \frac{\text{Joules}}{\text{Coloumb}} \qquad I = \frac{\text{Coloumbs}}{\text{second}}$$

$$V \cdot I = \frac{\text{Joules}}{\text{Coloumb}} \; \frac{\text{Coloumbs}}{\text{second}} = \frac{\text{Joules}}{\text{second}}$$

Joules/sec is called a **Watt**, abbreviated **W**.

How much power does a light bulb use, if it is connected to 120V and draws 0.5 A?

A more exciting example

How much power does the source absorb?

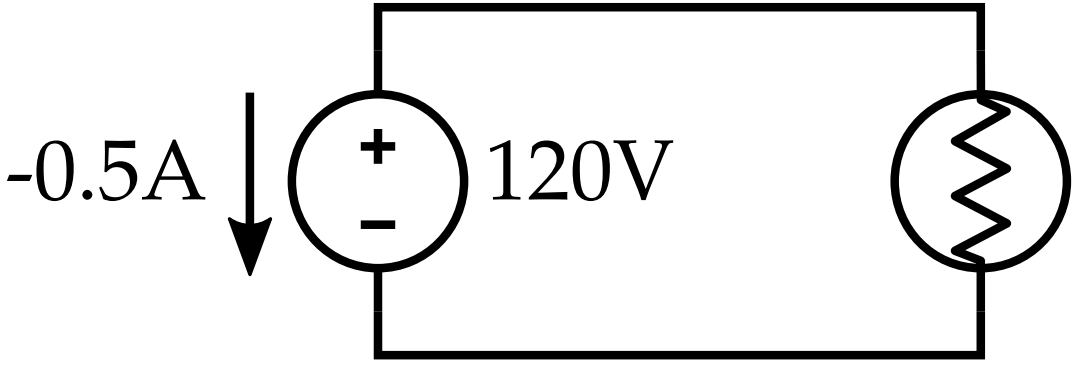

Let's make a deal

When calculating power,
current references should match voltage references:

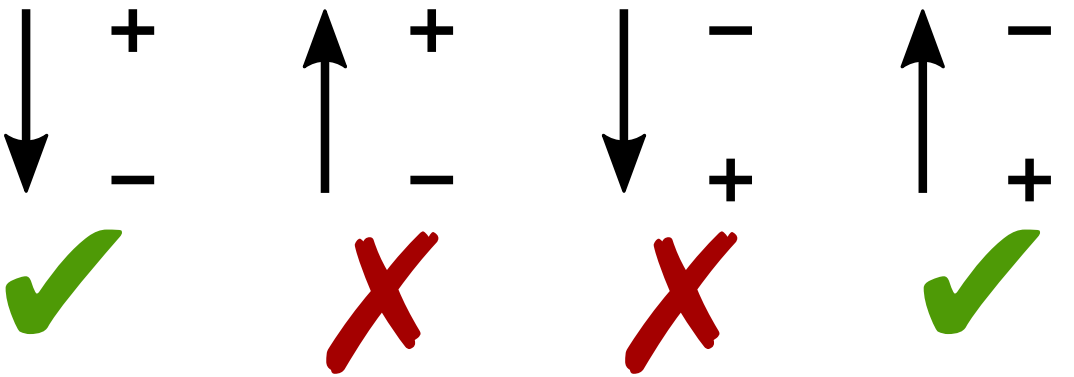

Then positive power is always power absorbed, and negative power is always power supplied.

This is called the **"passive sign convention"**.

Which of these are **absorbing electrical power**?

Watch the signs!

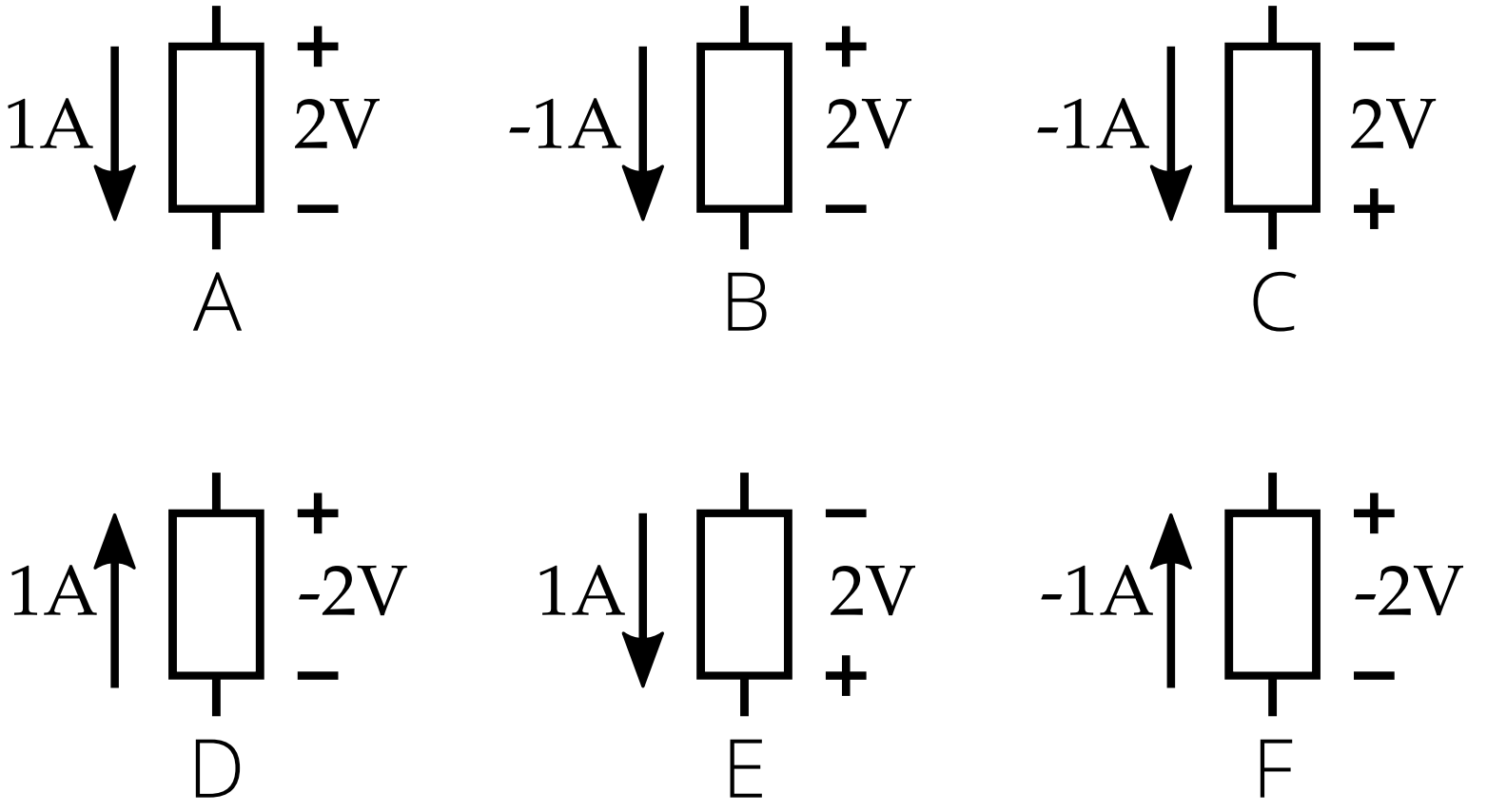

Device models

Marble-track resistor

woodgears.ca

Ohm's Law

For a resistor (and only a resistor):

$$I = \frac{V}{R}$$

R is the resistance, measured in Ohms

Represented with the schematic symbol:

What is the current i?

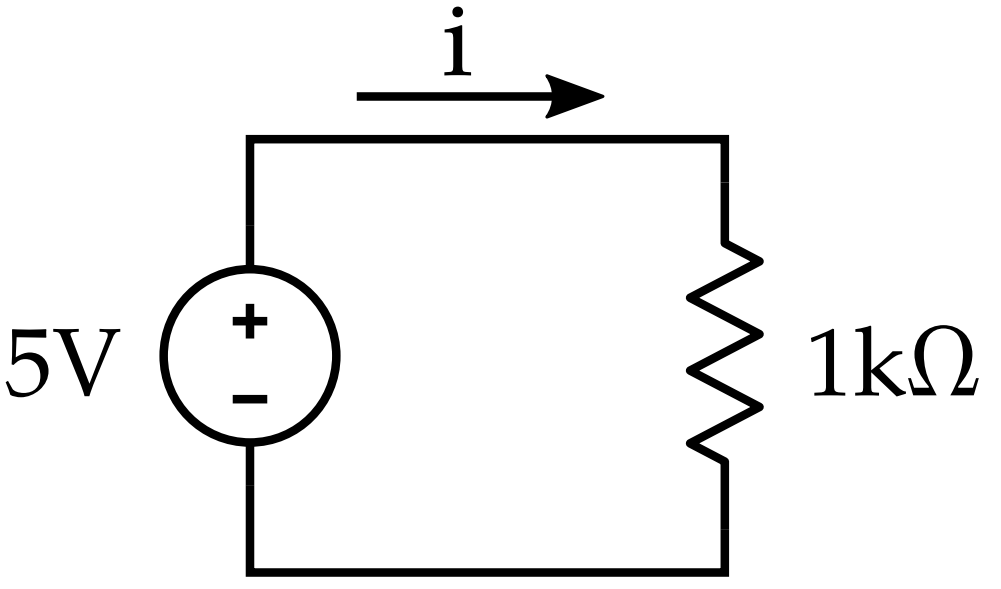

Challenge: what would happen to the current if we added a second 1kΩ resistor in parallel?

How do you feel about this material?