E40M

Op Amps

M. Horowitz, J. Plummer, R. Howe

Reading

A&L: Chapter 15, pp. 863-866.

Reader, Chapter 8

- Noninverting Amp
  - http://www.electronics-tutorials.ws/opamp/opamp_3.html
- Inverting Amp
  - http://www.electronics-tutorials.ws/opamp/opamp_2.html
- Summing Amp
  - http://www.electronics-tutorials.ws/opamp/opamp_4.html

How to Measure Small Voltages?

- Arduino input has full-scale around 5V
  - It produces a 10 bit answer (1024)
  - This means a LSB (least significant bit) is 5mV
- Need to make the signal bigger before input to Arduino
  - So, we will use an *amplifier*
- Many ways to build amplifiers
  - One often uses a standard building block for amplifiers
    - Called an Operational Amplifier, or Op-Amp
    - A circuit with very high gain at low frequencies (< 10 kHz)

Electrical Picture

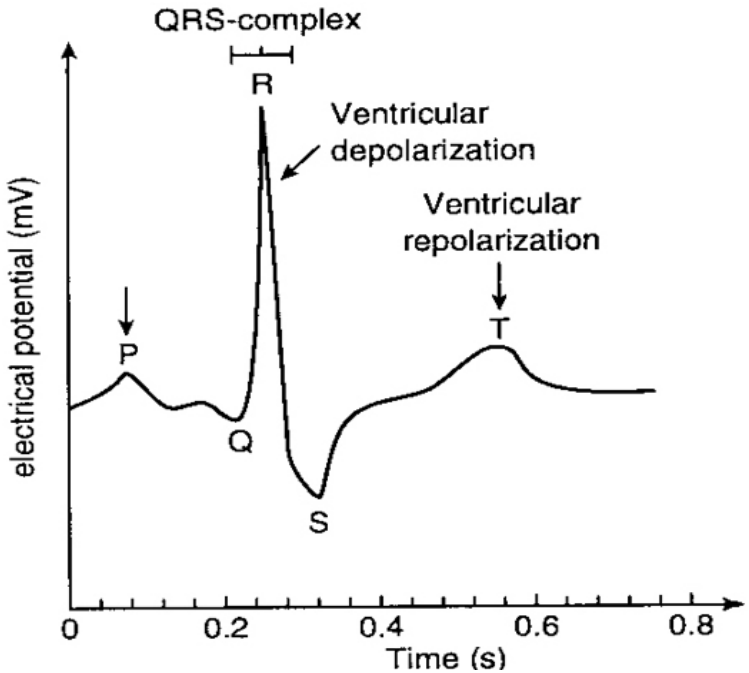

- Signal amplitude ≈ 1 mV
- Noise level will be significant
- ∴ will need to amplify *and* filter
- We'll use filtering ideas from the last two lectures

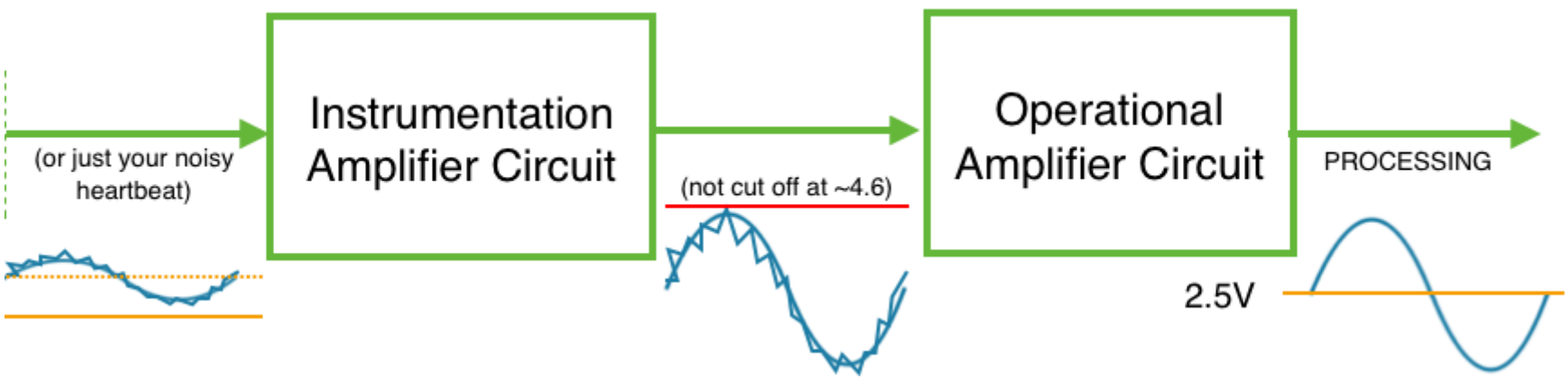

OP AMPS

Op Amp

- Is a common building block
  - It is a high-gain amplifier
- Output voltage is

  A (V+ – V-)

  Gain, A, is 10 K to 1 M
- Output voltage can be + or –
  - Often can swing between +Vdd and -Vdd supplies
  - Huh?

LM741

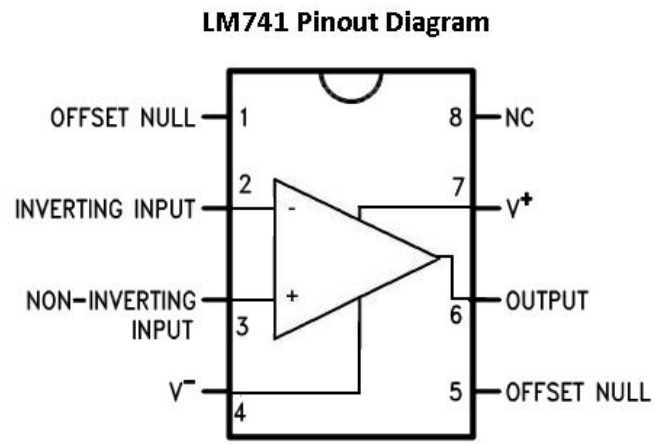

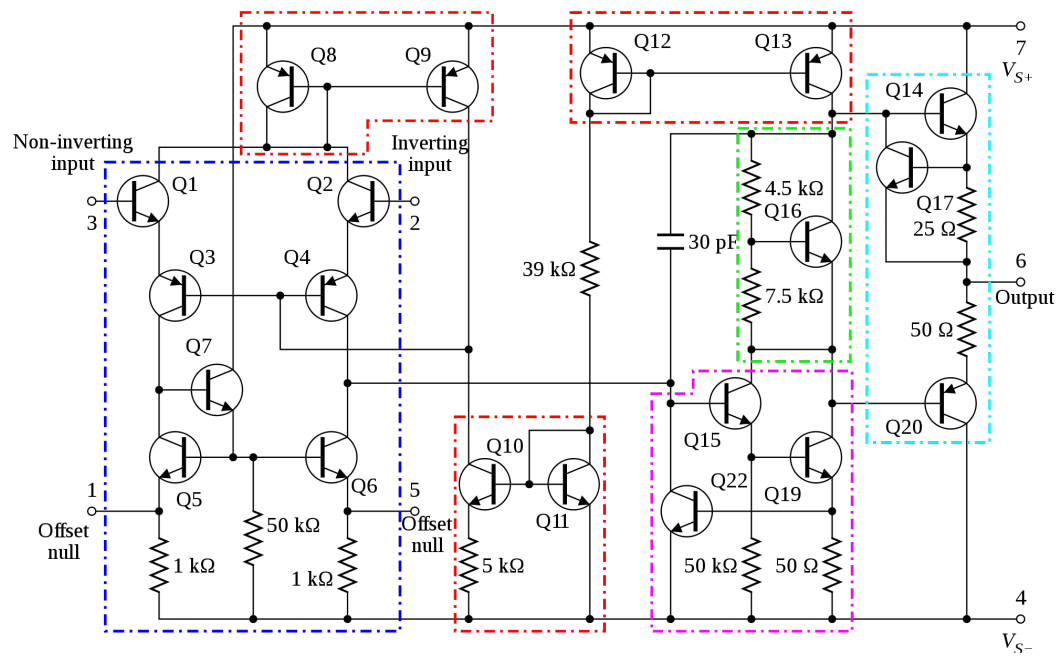

Op-Amp Power Supply

- Up to now we had one supply voltage, Vdd
  - All voltages were between Vdd and Gnd
  - Generally measured relative to Gnd
    - So all voltages were positive.
- A sinewave goes positive and negative
  - And most input signals do that too
- It is convenient to have a reference where
  - The output can be positive and negative
  - Can do that by changing what we call the reference

Moving the Reference

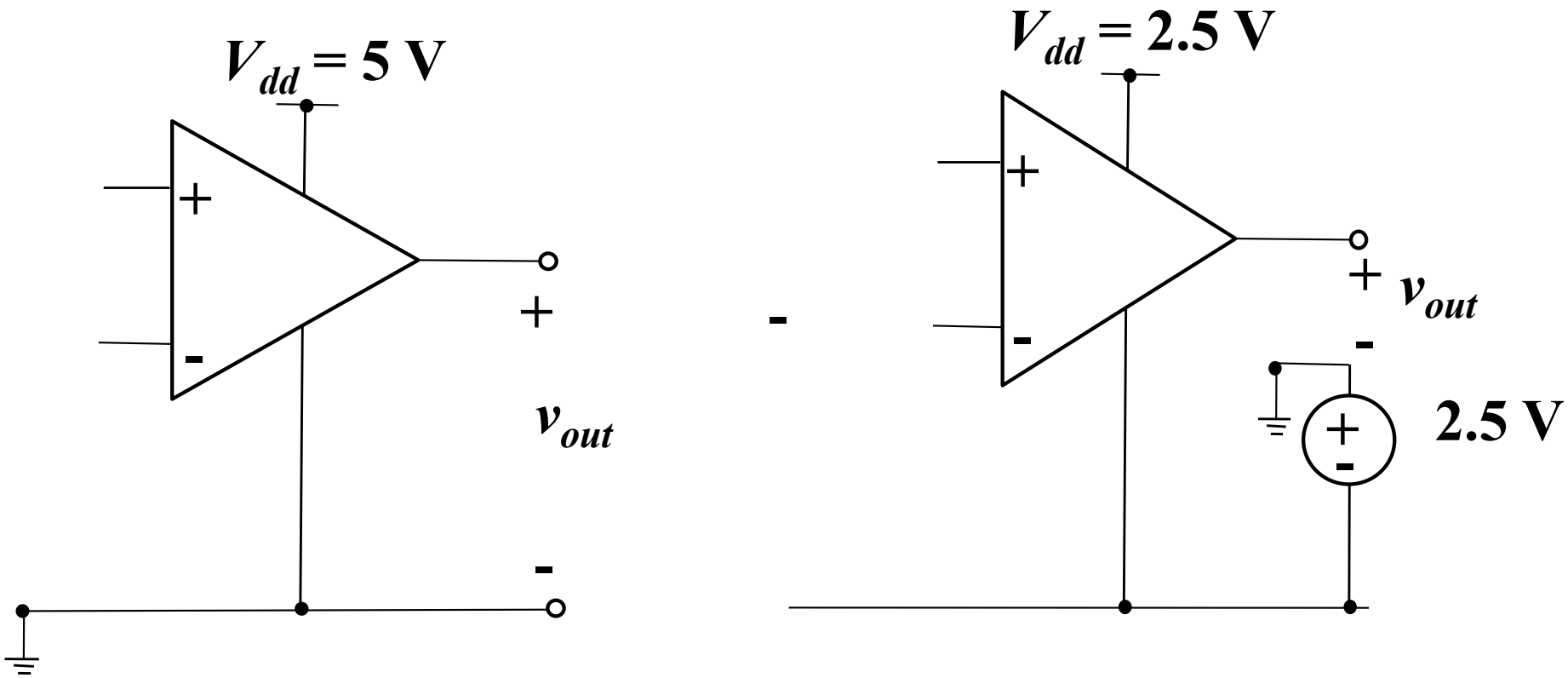

The voltages are all the same, only the reference voltage has moved

What You Will Actually Do

- Use the USB supply
  - Just change the reference voltage

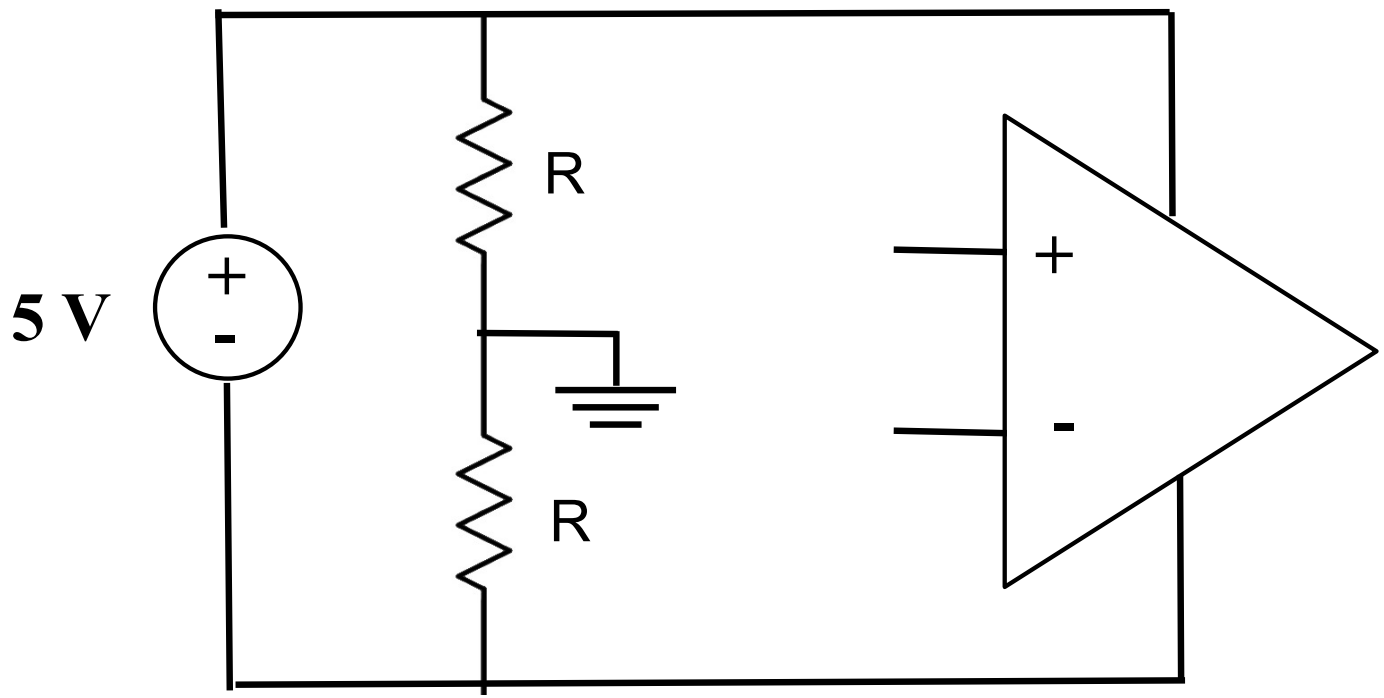

Op Amp Behavior

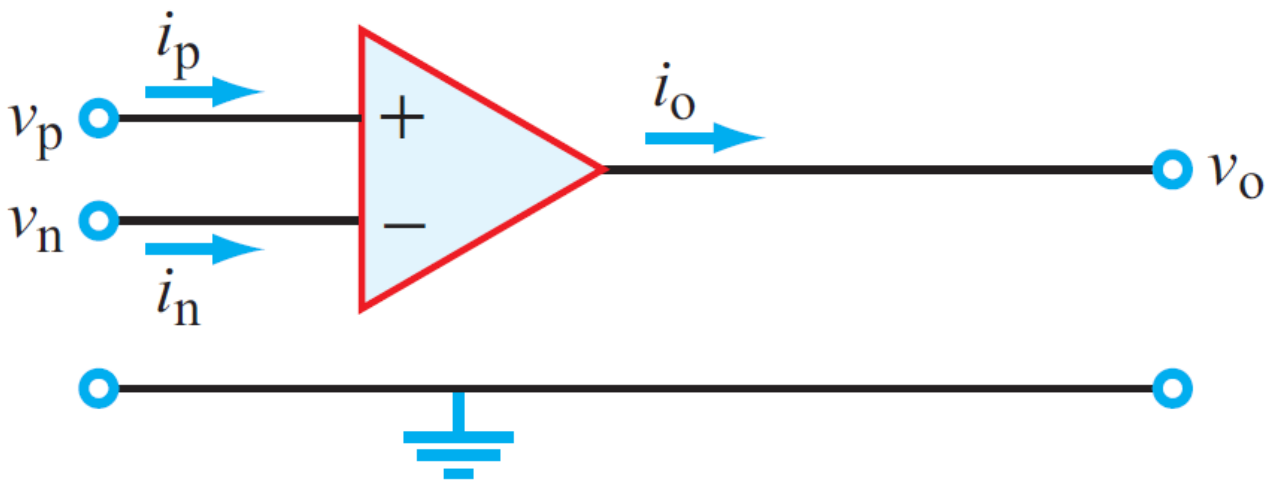

- Relationship between output voltage and input voltage:

$$v_o = A\left(v_+ - v_-\right) = A\left(v_p - v_n\right)$$

A is the op-amp gain (or open-loop gain), and is huge 10K-1M

- The input currents are very, very small

so $i_p \approx 0$ and $i_n \approx 0$.

Since the Output Swing is Limited

- The high gain only exists for a small range of input voltages
  - If the input difference is too large, the output "saturates"
    - Goes to the max positive or negative value possible
    - Close to supply voltages

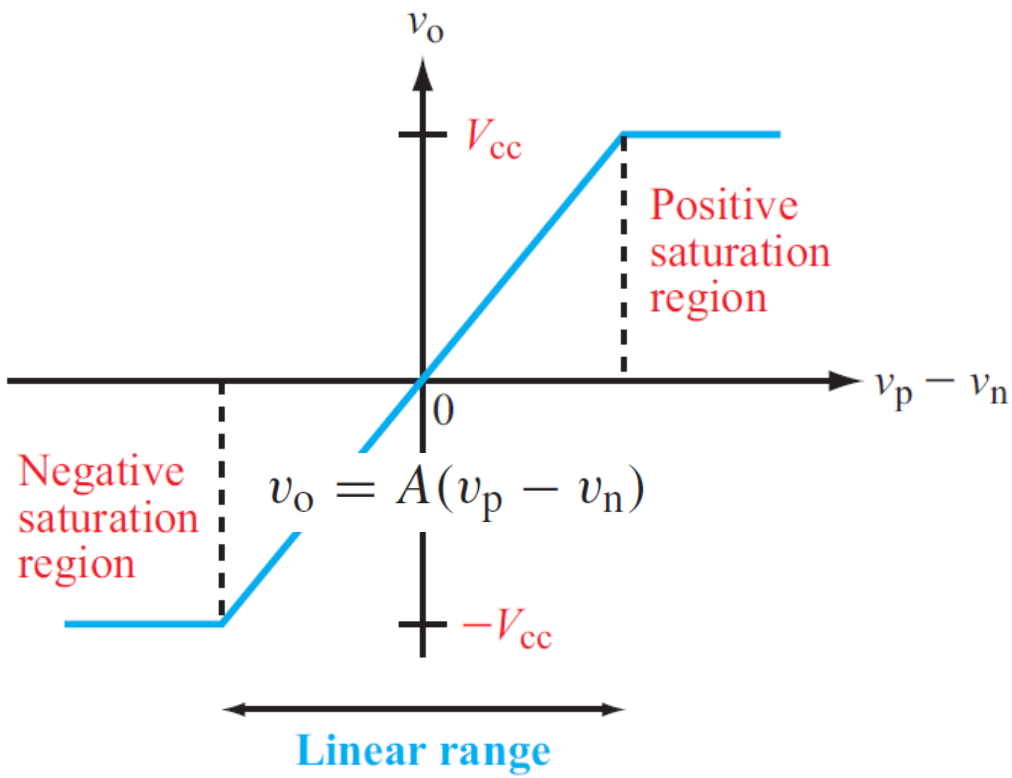

What Does This Do?

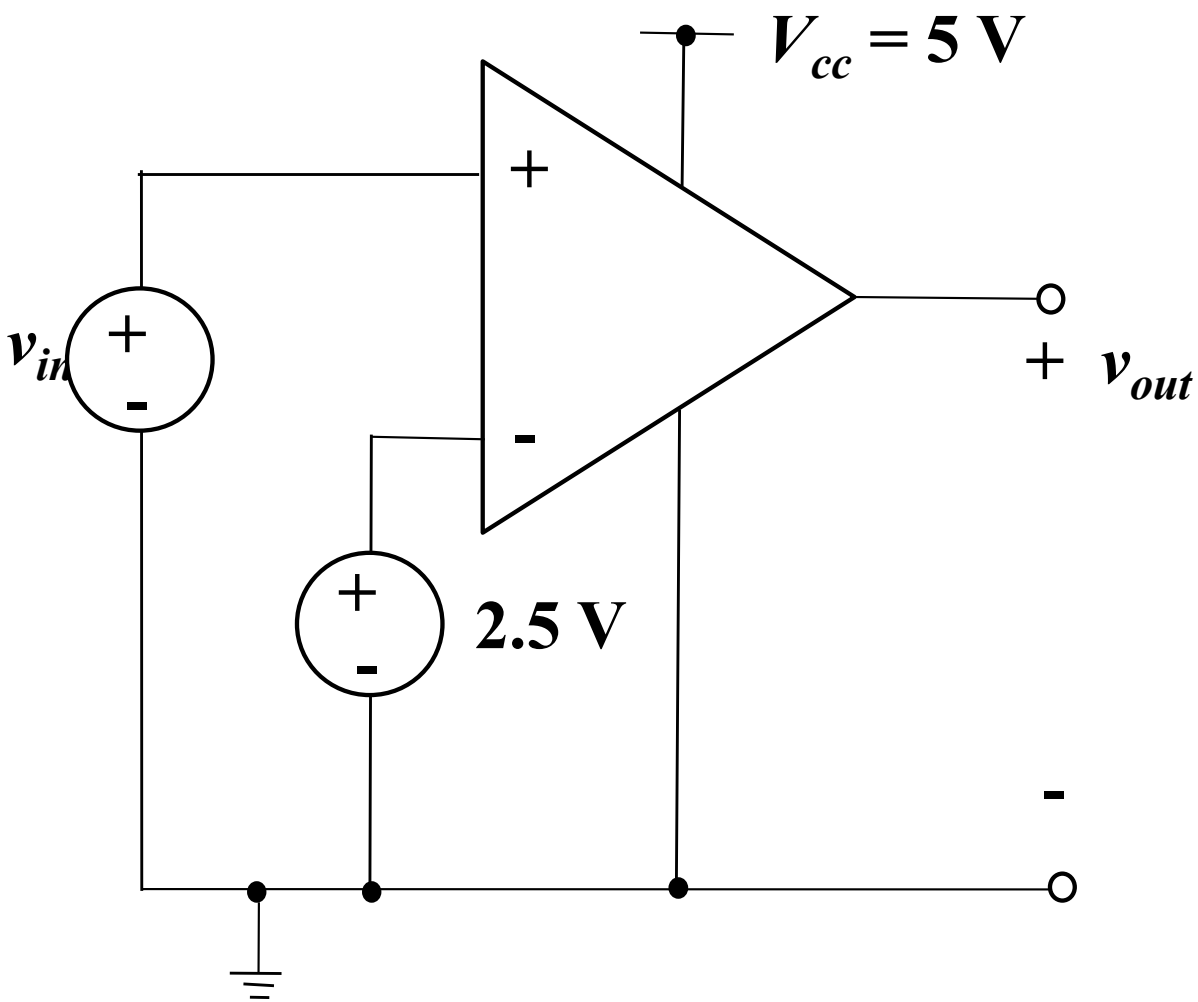

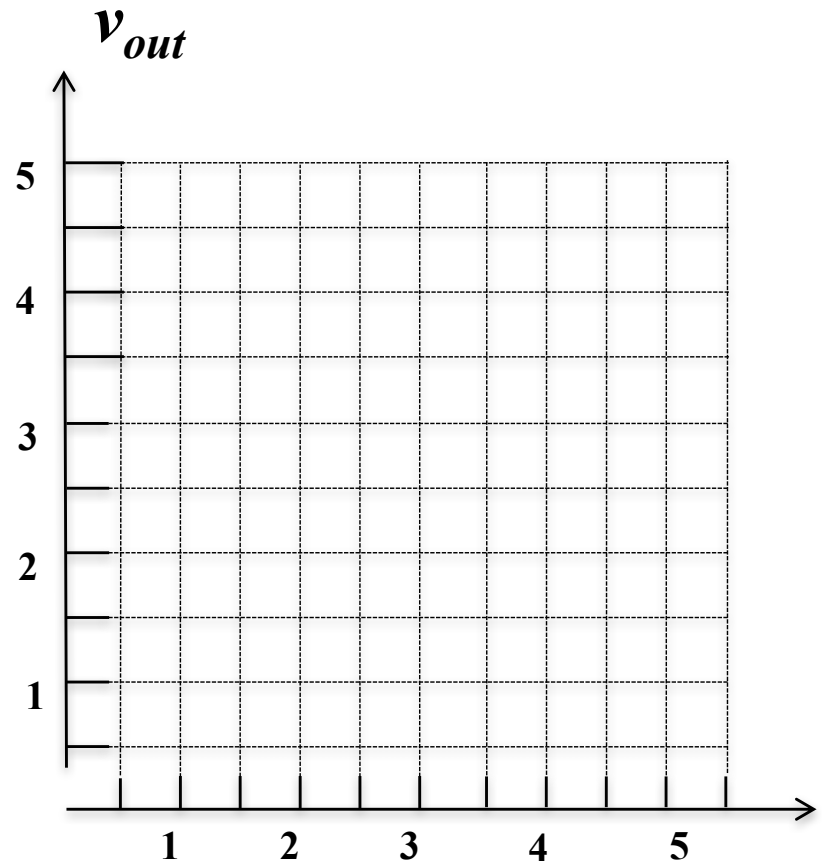

Same Circuit Different Reference

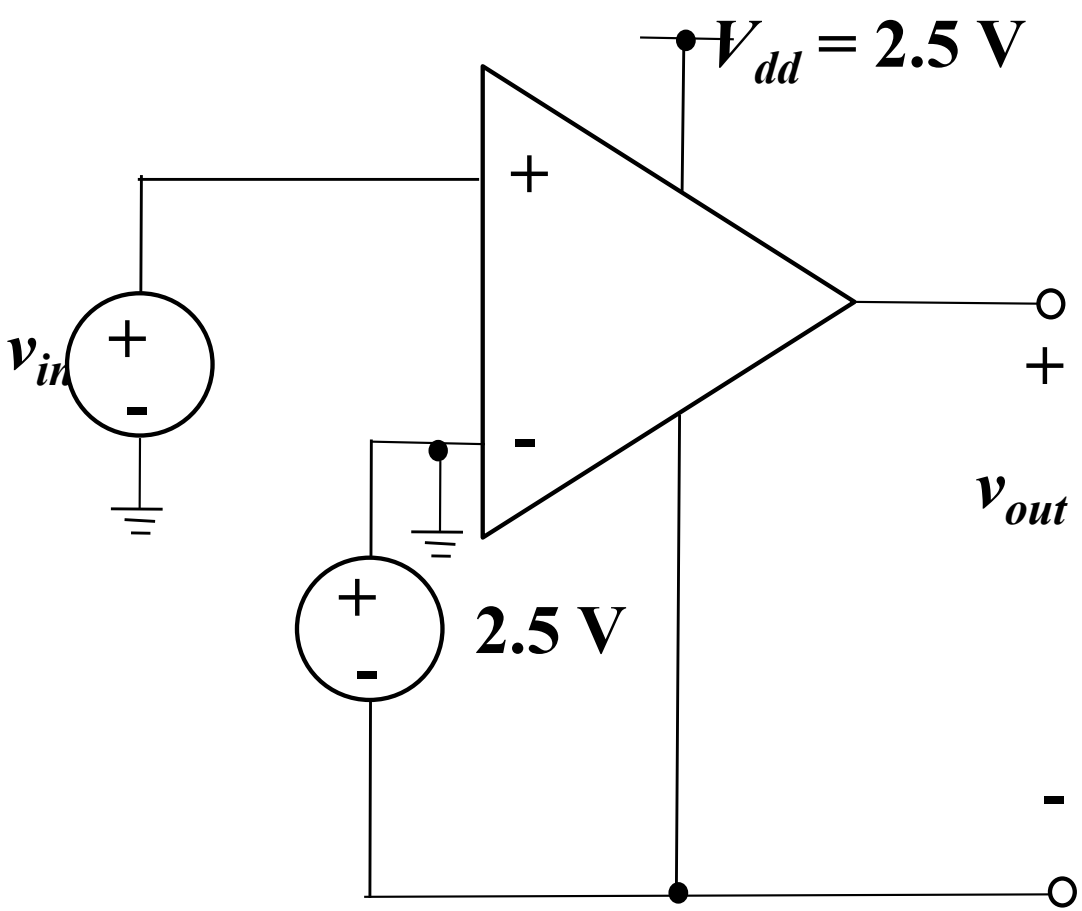

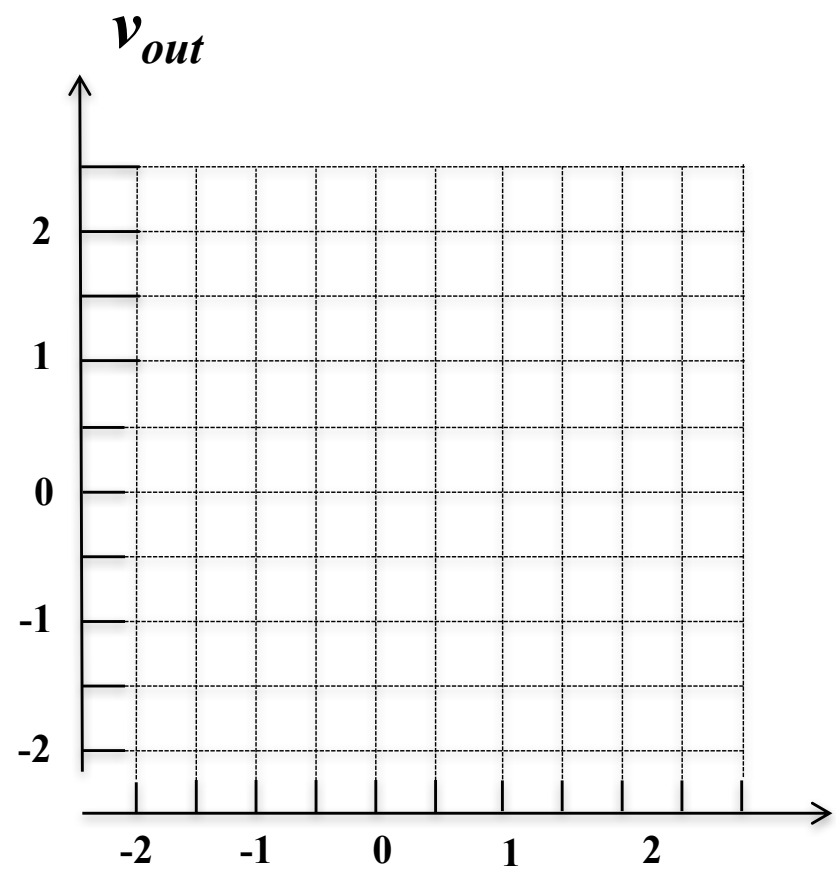

How To Get A Useful Amplifier

- The gain of the op amp is too high to make a useful amplifier
  - We need to do something to make it useful
- We will use **analog feedback** to fix this problem
  - Feedback makes the input the error between the value of the output, and the value you want the output to have.
- Let's see how to do this

Connect V_{out} to V_{in-}

$$v_{out} = A(V_+ - V_-) = A(v_{in} - v_{out})$$

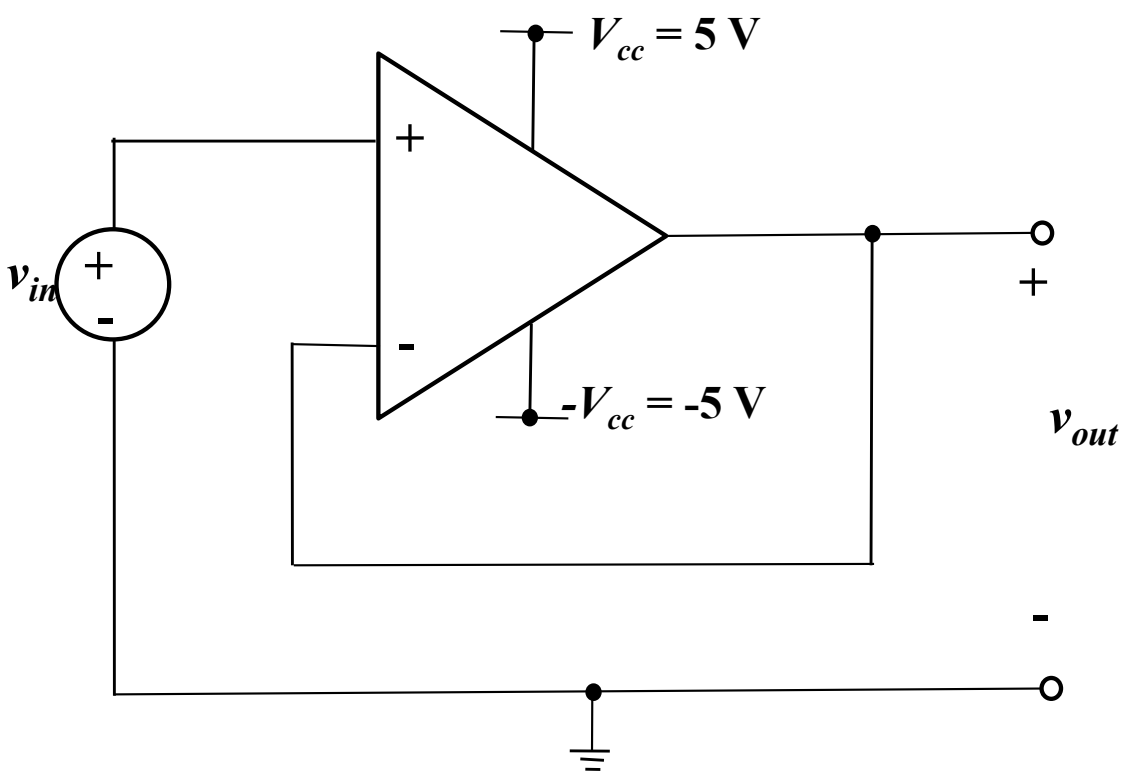

$$\therefore (A+1)v_{out} = Av_{in}$$

$$\therefore v_{out} = \frac{A}{(A+1)} v_{in} \cong v_{in}$$

What Is Going On

- We solved the equation to find the answer
  - But how does the op-amp get this answer?

- Think about what happens when the input increases in voltage
  - From 0 V to 0.1 V
  - Initially the output can't change
    - There is capacitance at every node
  - The op-amp thinks it needs to create a huge output voltage
    - So it drives current into the output
    - Which charges the capacitor
    - Causing the output to increase
  - This then decreases the input difference

Feedback in an Op-amp Circuit

- As the output rises
  - The input difference decreases
  - So $A^* \Delta V_{in}$ also decreases

- The system is stable when
  - $A^* \Delta V_{in}$ is exactly equal to V_{out}

- If A is large (10^6) for any V_{out}
  - Say in the range of ± 10V
  - Δv_{in} will be very, very small
  - Can approximate that by saying Δv_{in} will be driven to 0
  - Output will be set so $v_{in+} \approx v_{in-}$

BUT

- This is only true if you connect the output feedback
  - To the *negative* terminal of the amplifier
- What happens if you connect it to the *positive* terminal?

Ideal Op Amps

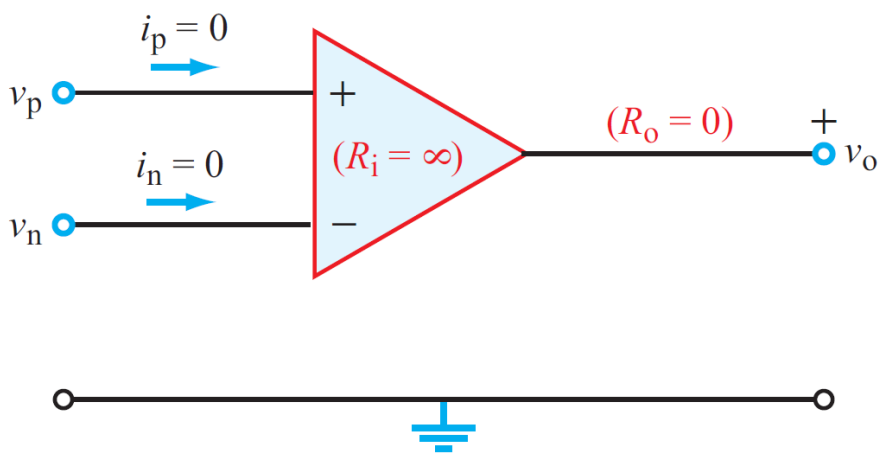

Ideal Op Amp

- Current constraint $i_p = i_n = 0$
- Voltage constraint $v_p = v_n$
- $A = \infty$ $R_i = \infty$ $R_o = 0$

The Two Golden Rules **for circuits with ideal op-amps***

1. $v_p = v_n$ (Ideal op-amp model). **No voltage difference between op-amp input terminals**

2. $i_p = i_n = 0$ (Ideal op-amp model). **No current into op-amp inputs**

**** when used in negative feedback amplifiers***

USEFUL OP AMPS CIRCUITS

Approach To Solve All Op-amp Circuits

- First check to make sure the feedback is negative
  - If not, STOP!
- Find the output voltage that makes the input difference 0
  - Assume $V_+ = V_-$
  - Find V_{out} such that KCL holds
- We'll do some examples

Non-inverting Amplifier

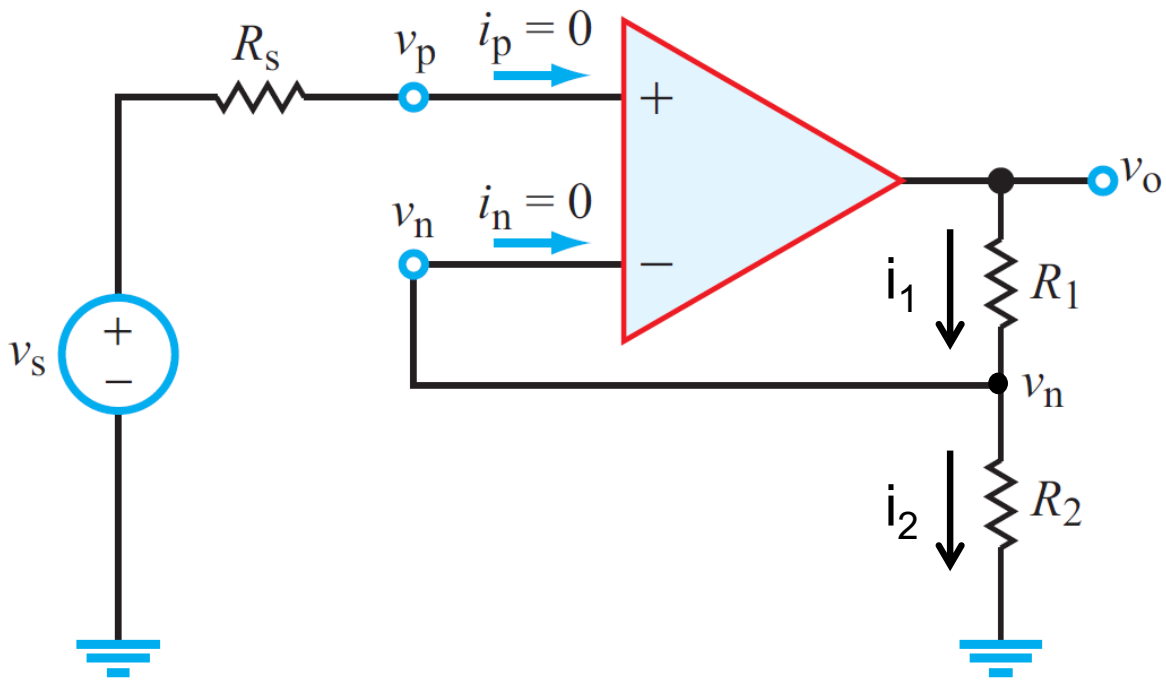

- $i_p = 0$ so $v_p = v_s$
- $V_+ = V_-$ so $v_n = v_p = v_s$

$$i_1 = i_2 \quad \text{so} \quad \frac{v_o - v_s}{R_1} = \frac{v_s}{R_2}$$

$$\therefore \frac{v_o}{R_1} = v_s\left(\frac{1}{R_1} + \frac{1}{R_2}\right)$$

$$\therefore v_o = v_s\left(\frac{R_1 + R_2}{R_2}\right)$$

Inverting Amplifier

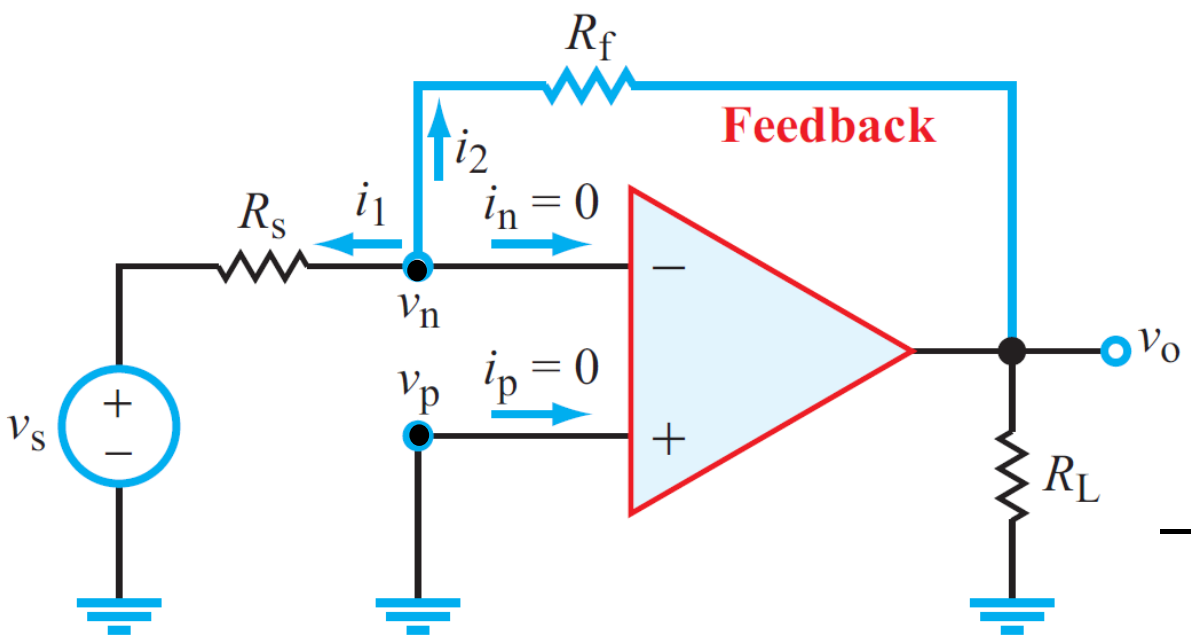

At node v_n

$$\frac{v_n - v_s}{R_s} + \frac{v_n - v_o}{R_f} + i_n = 0$$

But $v_n = v_p = 0$ and $i_n = 0$, so

$$-\frac{v_s}{R_s} - \frac{v_o}{R_f} = 0 \quad \text{or} \quad v_o = -v_s \frac{R_f}{R_s}$$

$$G = \frac{v_o}{v_s} = -\left(\frac{R_f}{R_s}\right).$$

Current-to-Voltage Converter

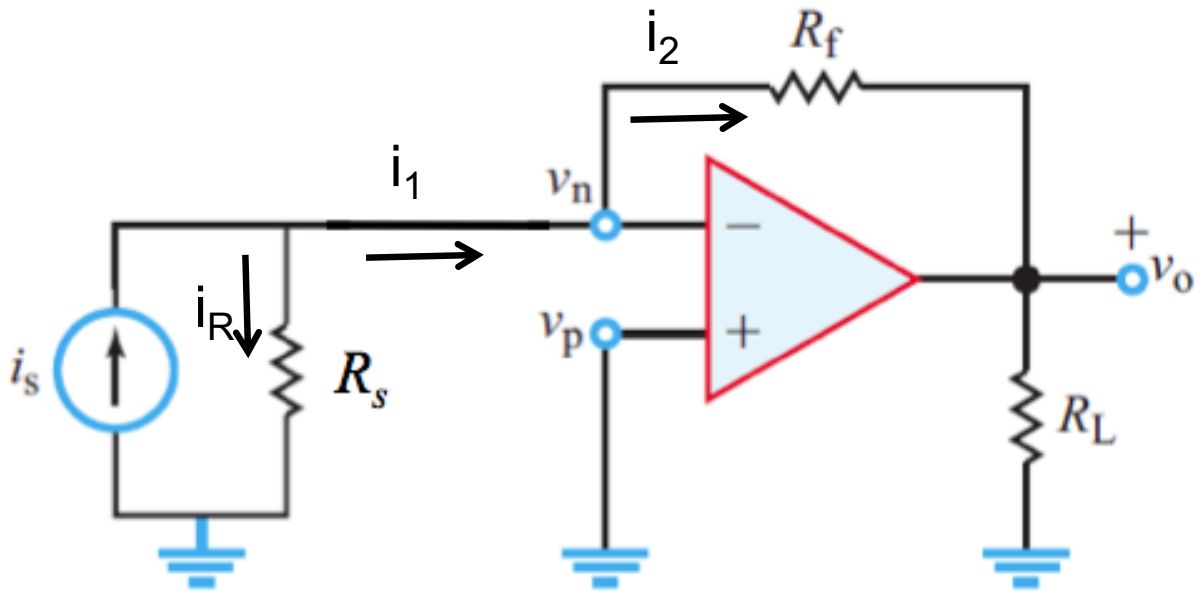

- $i_p = i_n = 0$
- $v_n = v_p = 0$
- So $i_R = 0$ as well

KCL at the v_n node:

$$i_1 = i_s = i_2 = -\frac{v_o}{R_f} \quad \text{so} \quad v_o = -i_s R_f$$

OP AMP FILTERS

Adding Capacitors

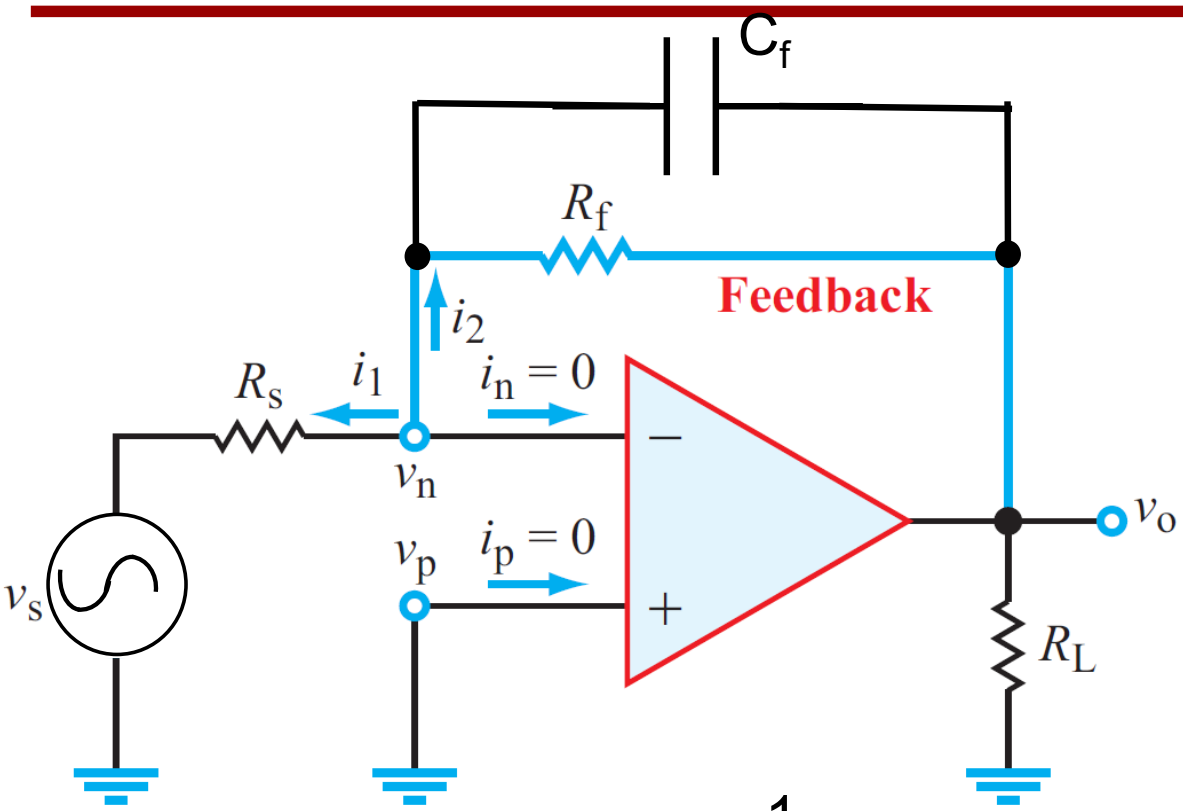

Sinusoidal voltage

- Suppose we add a capacitor in the feedback
- We can treat this exactly as we did the earlier circuits by using impedances.
- Our earlier analysis showed

$$v_o = -v_s \frac{R_f}{R_s}$$

$$Z_s = R_s \qquad Z_f = \frac{1}{\frac{1}{R_f} + j * 2\pi F C_f}$$

$$\therefore v_o = -v_s \frac{Z_f}{Z_s} = -\frac{\frac{1}{\frac{1}{R_f} + j * 2\pi F C_f}}{R_s} = -v_s \frac{R_f}{R_s}\left(\frac{1}{1 + j * 2\pi F R_f C_f}\right)$$

Sketching the Bode Plot

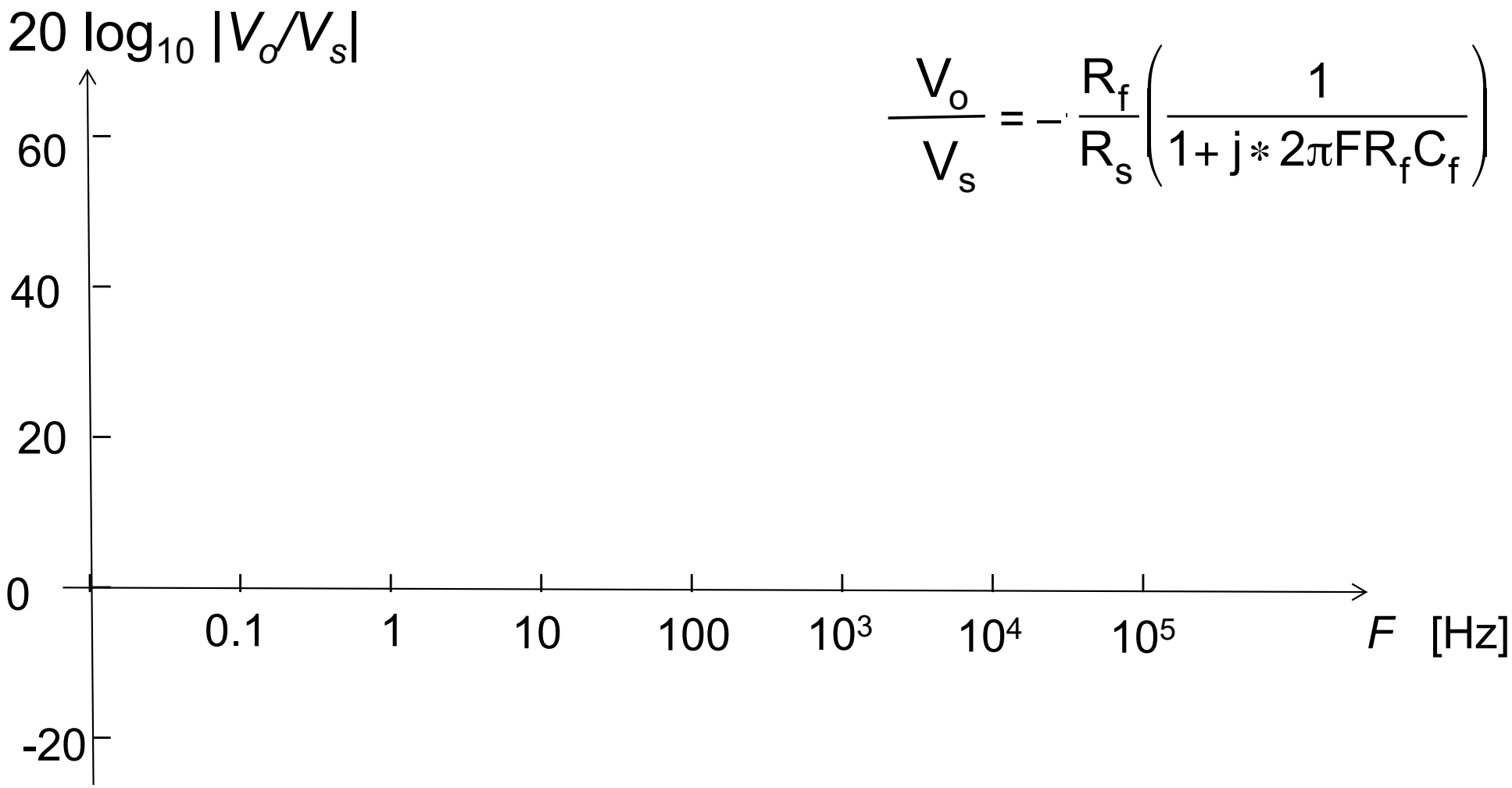

$$\frac{V_o}{V_s} = -\frac{R_f}{R_s}\left(\frac{1}{1 + j * 2\pi F R_f C_f}\right)$$

R_s = 1 kΩ, R_f = 100 kΩ, C_f = 160 nF $\quad F_c = 1/(2\pi R_f C_f) = 10$ Hz

Learning Objectives

- Understand how living things use electricity
- Understand what an op amp is:
  - The inputs take no current
  - The output is 10^6 times larger than the difference in input voltages
- The two Golden Rules of op amps in negative feedback
  - Input currents are 0; $V_{in-} = V_{in+}$
- Be able to use feedback to control the gain of the op amp
  - For inverting and non-inverting amplifiers
- Understand op amp filters and differential amplifiers

More Examples

Summing Amplifier

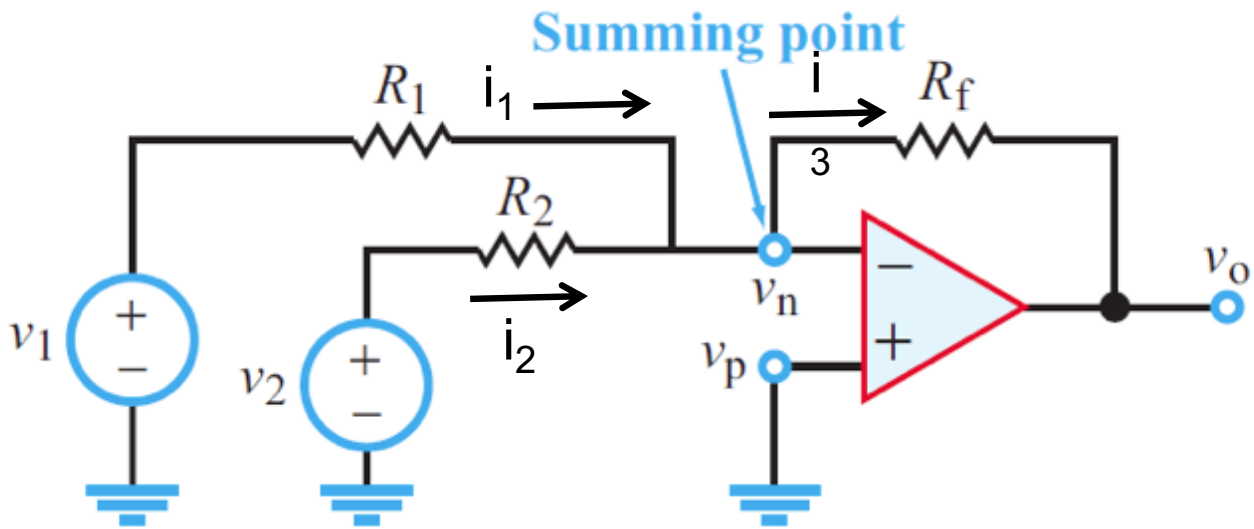

- $i_p = i_n = 0$
- $v_n = v_p = 0$

KCL at the summing point (or summing node):

$$i_1 + i_2 = i_3 \quad \text{so} \quad \frac{v_1}{R_1} + \frac{v_2}{R_2} = -\frac{v_o}{R}$$

Output voltage is a scaled sum of the input voltages:

$$v_o = -\left(\frac{R_f}{R_1} v_1 + \frac{R_f}{R_2} v_2\right)$$

A Subtracting (Difference) Amplifier?

- Take an inverting amplifier and put a 2nd voltage on the other input?

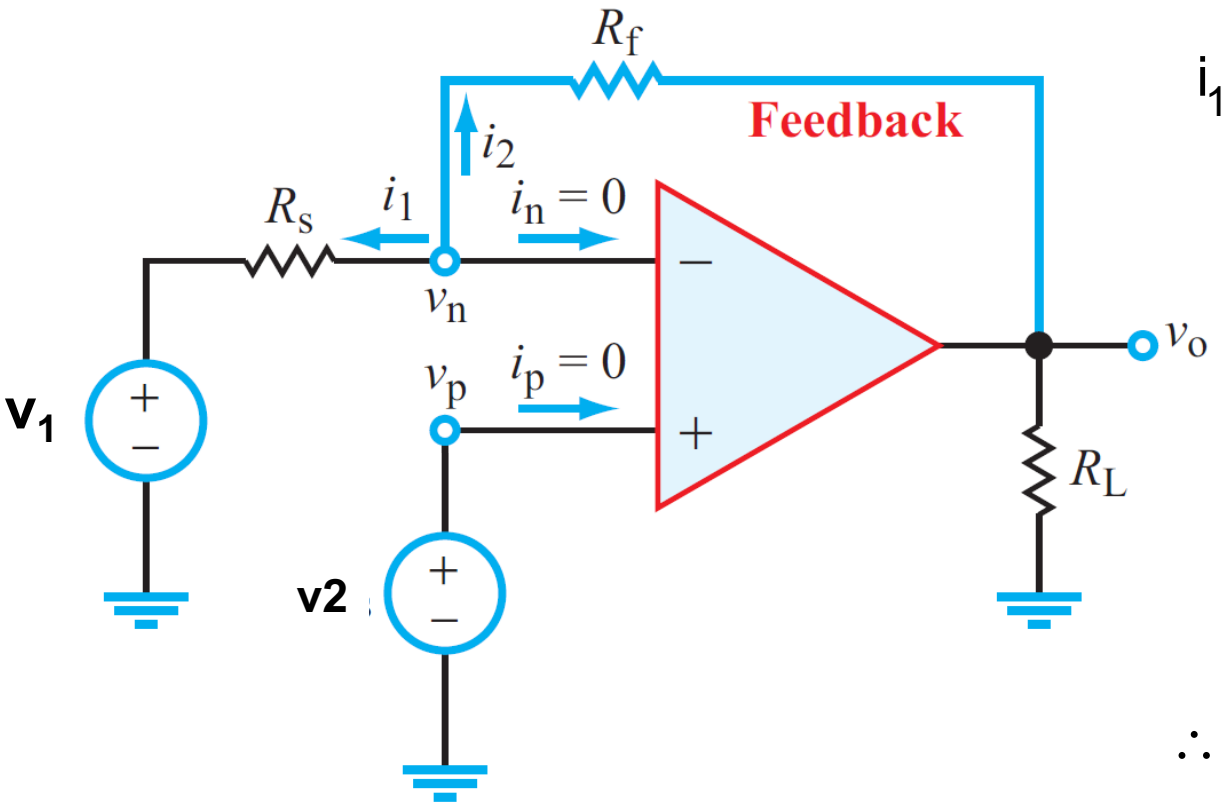

$$i_1 + i_2 = 0 \quad \text{so} \quad \frac{v_n - v_1}{R_s} + \frac{v_n - v_o}{R_f} = 0$$

$$v_n = v_2 \quad \text{so} \quad \frac{v_2 - v_1}{R_s} = \frac{v_o - v_2}{R_f}$$

$$\therefore \frac{v_o}{R_f} = \frac{v_2 - v_1}{R_s} + \frac{v_2}{R_f}$$

$$\therefore v_o = -v_1 \frac{R_f}{R_s} + v_2 \frac{R_f + R_s}{R_s}$$

- Not quite what we wanted. We'd like $v_o \; \alpha \; (v_1 - v_2)$.

Differential Amplifier 1.0

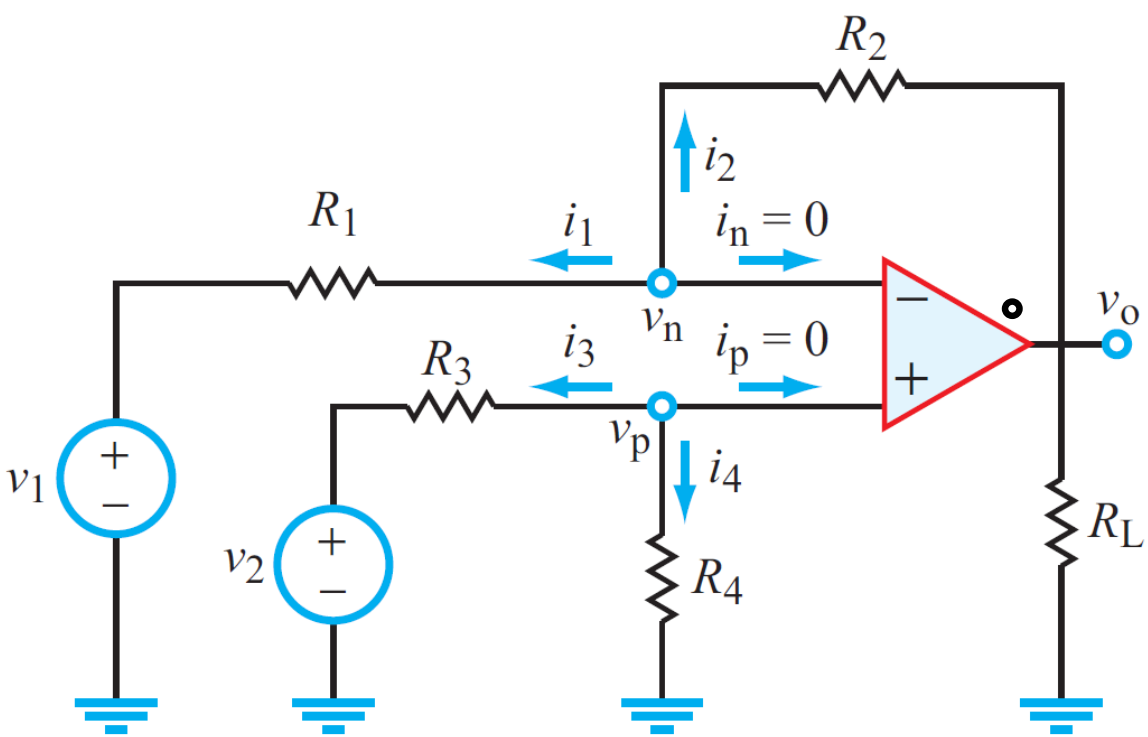

$$\frac{v_1 - v_n}{R_1} = \frac{v_n - v_o}{R_2}$$

$$\frac{v_1 - v_2 \dfrac{R_4}{R_3 + R_4}}{R_1} = \frac{v_2 \dfrac{R_4}{R_3 + R_4} - v_o}{R_2}$$

$$\therefore \frac{v_o}{R_2} = -\frac{v_1}{R_1} + \frac{v_2}{R_1}\left(\frac{R_4}{R_3 + R_4} + \frac{R_1}{R_2}\frac{R_4}{R_3 + R_4}\right)$$

But if $R_3 = R_1$ and $R_4 = R_2$

$$v_o = \left(v_2 - v_1\right)\frac{R_2}{R_1}$$