America's First Patents

Michael Risch
Associate Professor
Villanova University School of Law

Early Patents

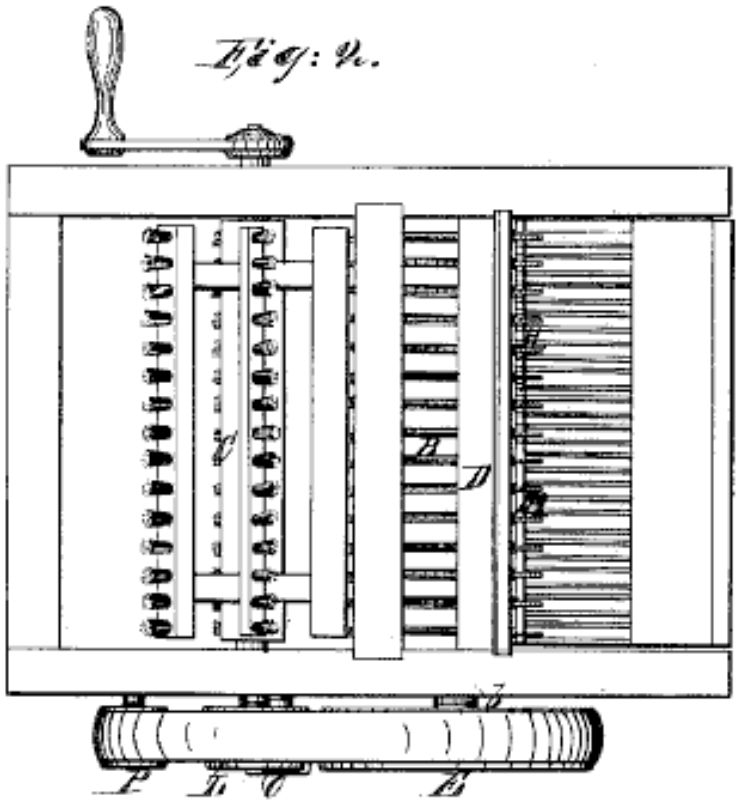

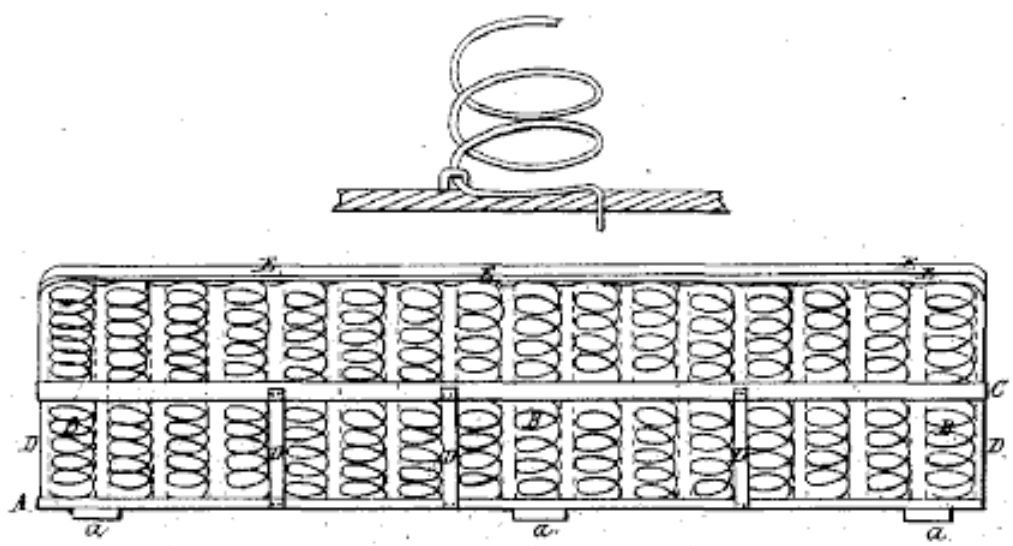
A
C
D
D
a
a
a

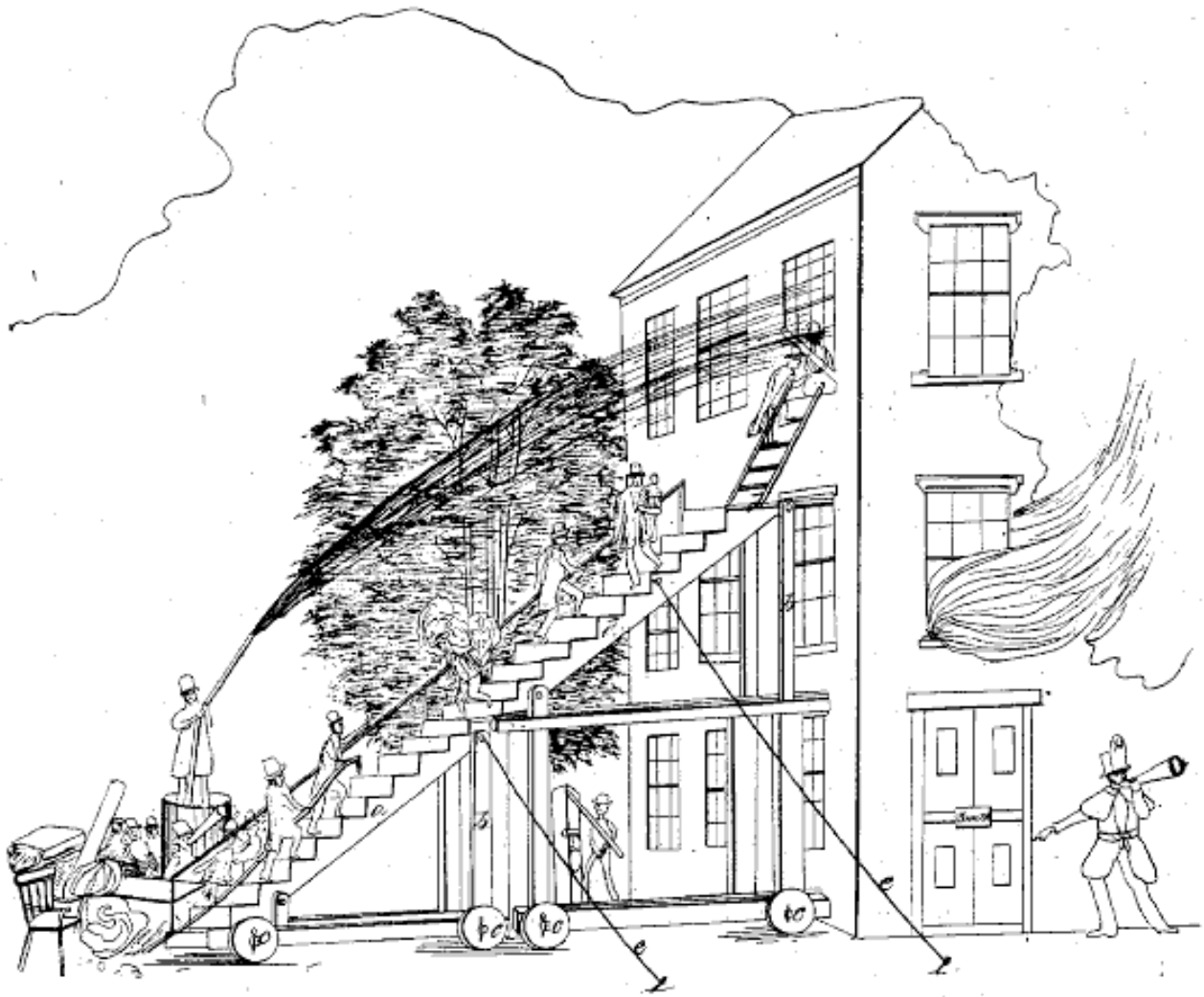

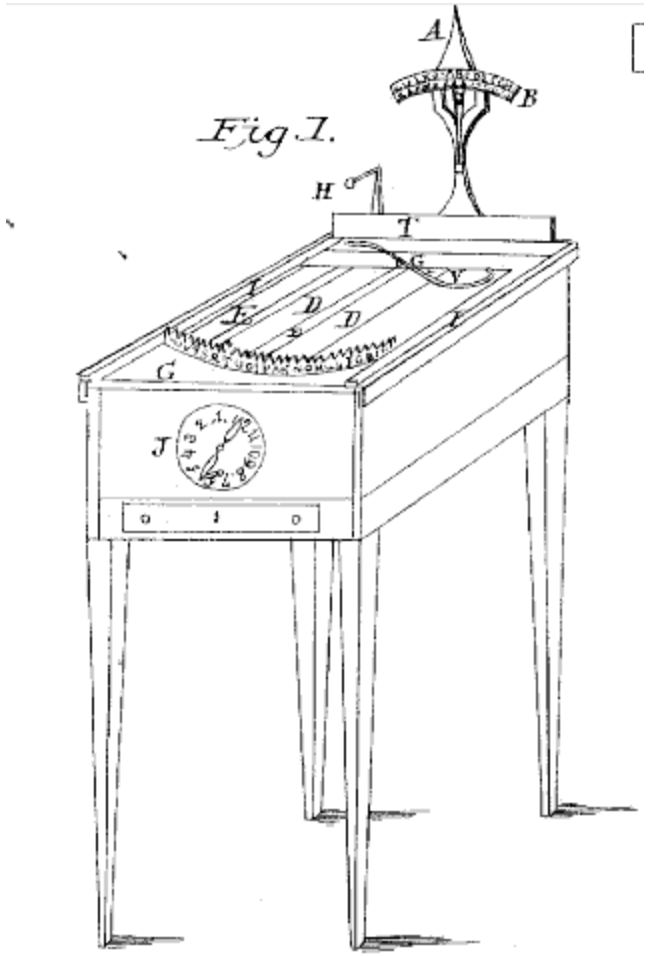

Fig. 1.

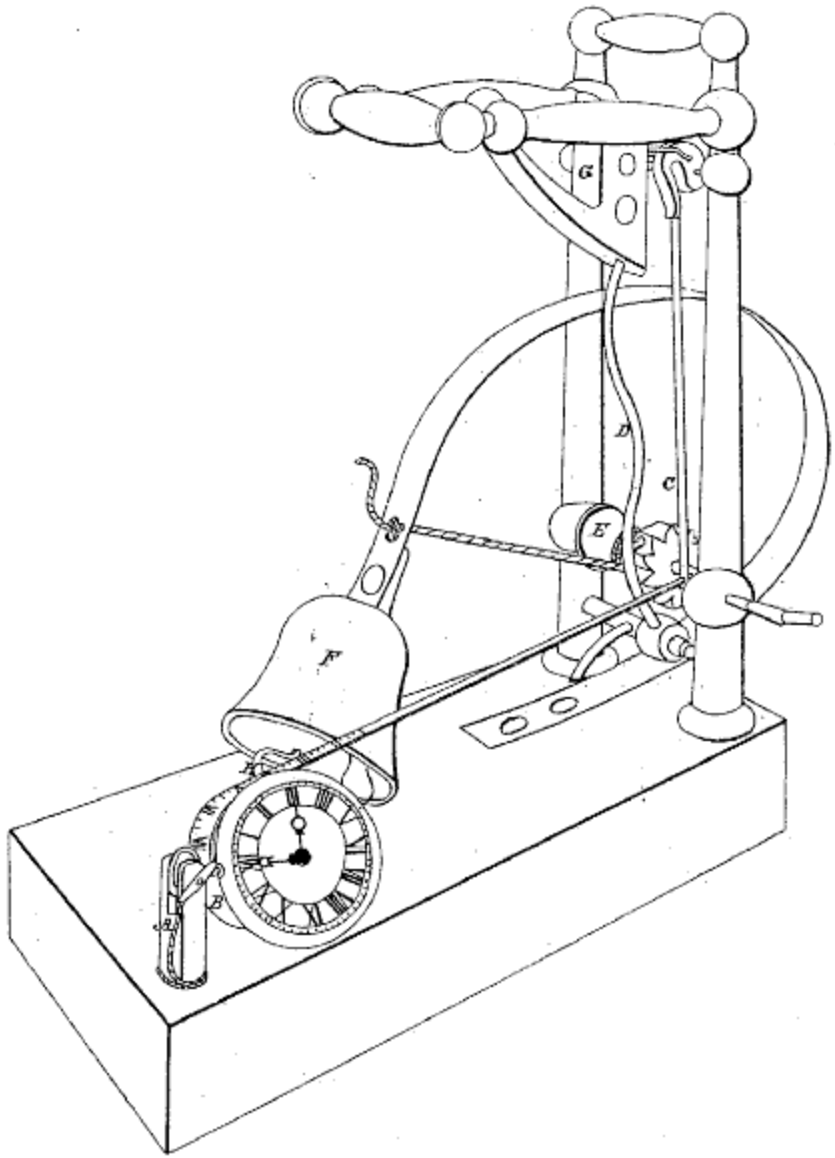
G
D
C
E
F
B

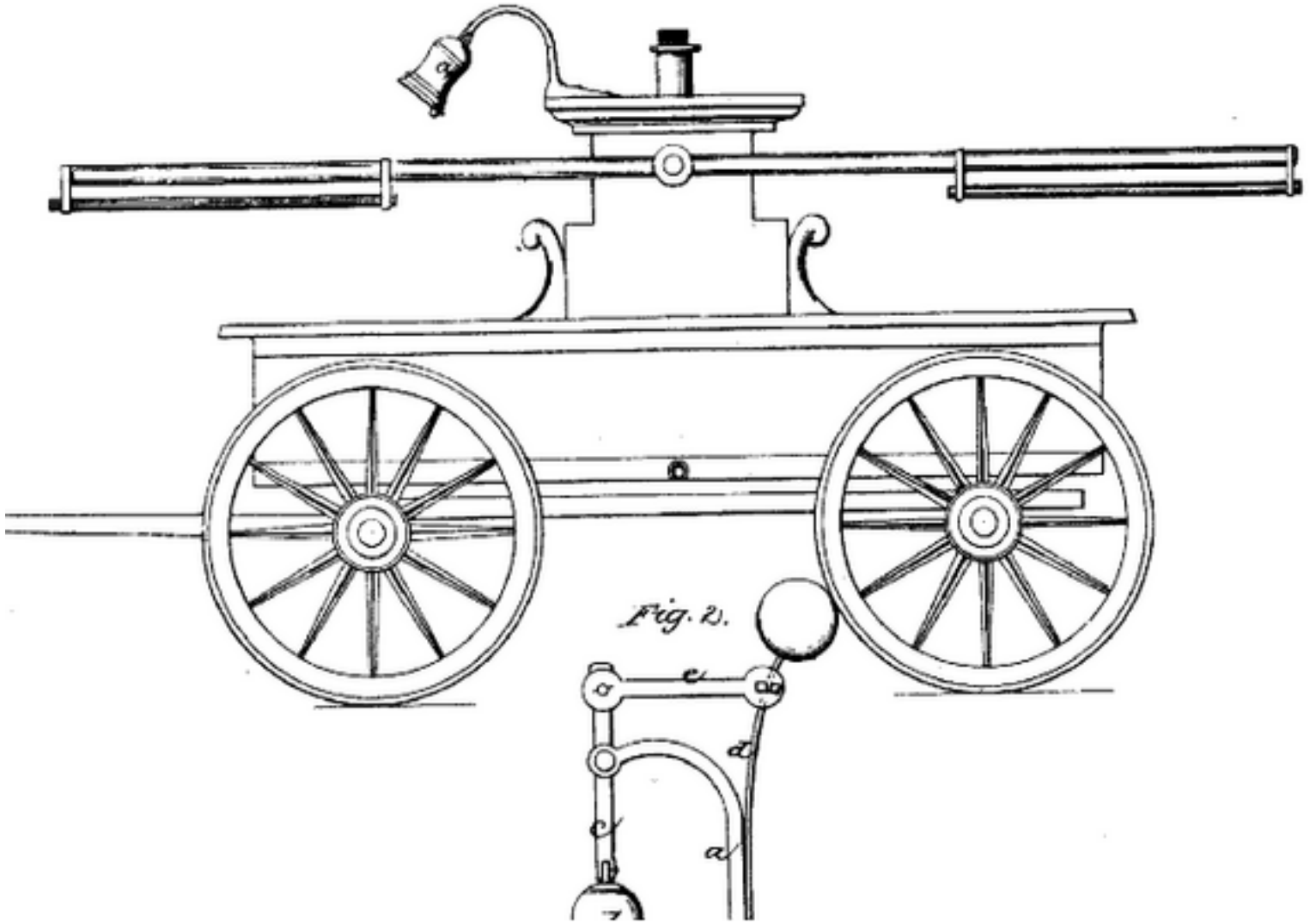

Fig. 2.

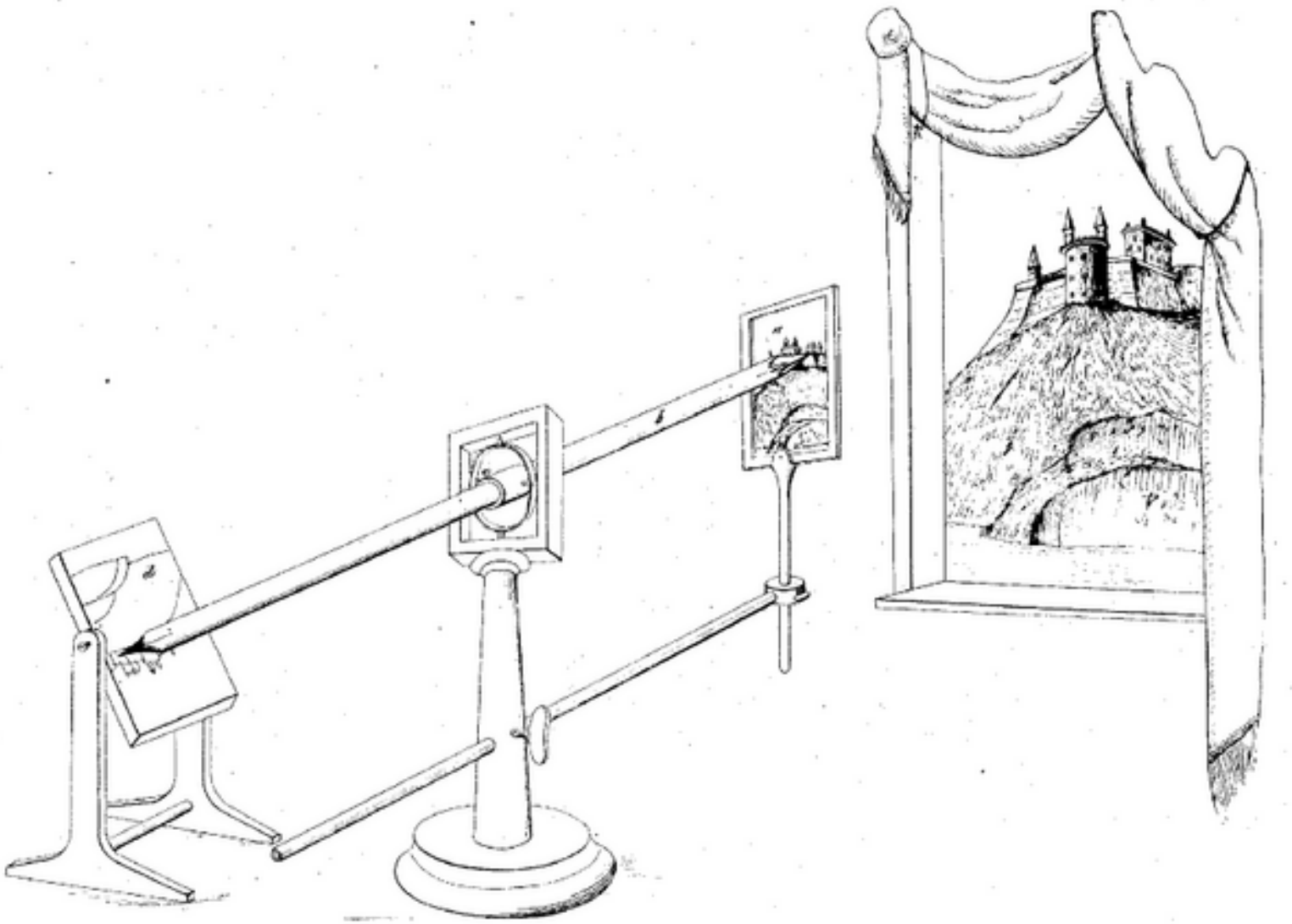

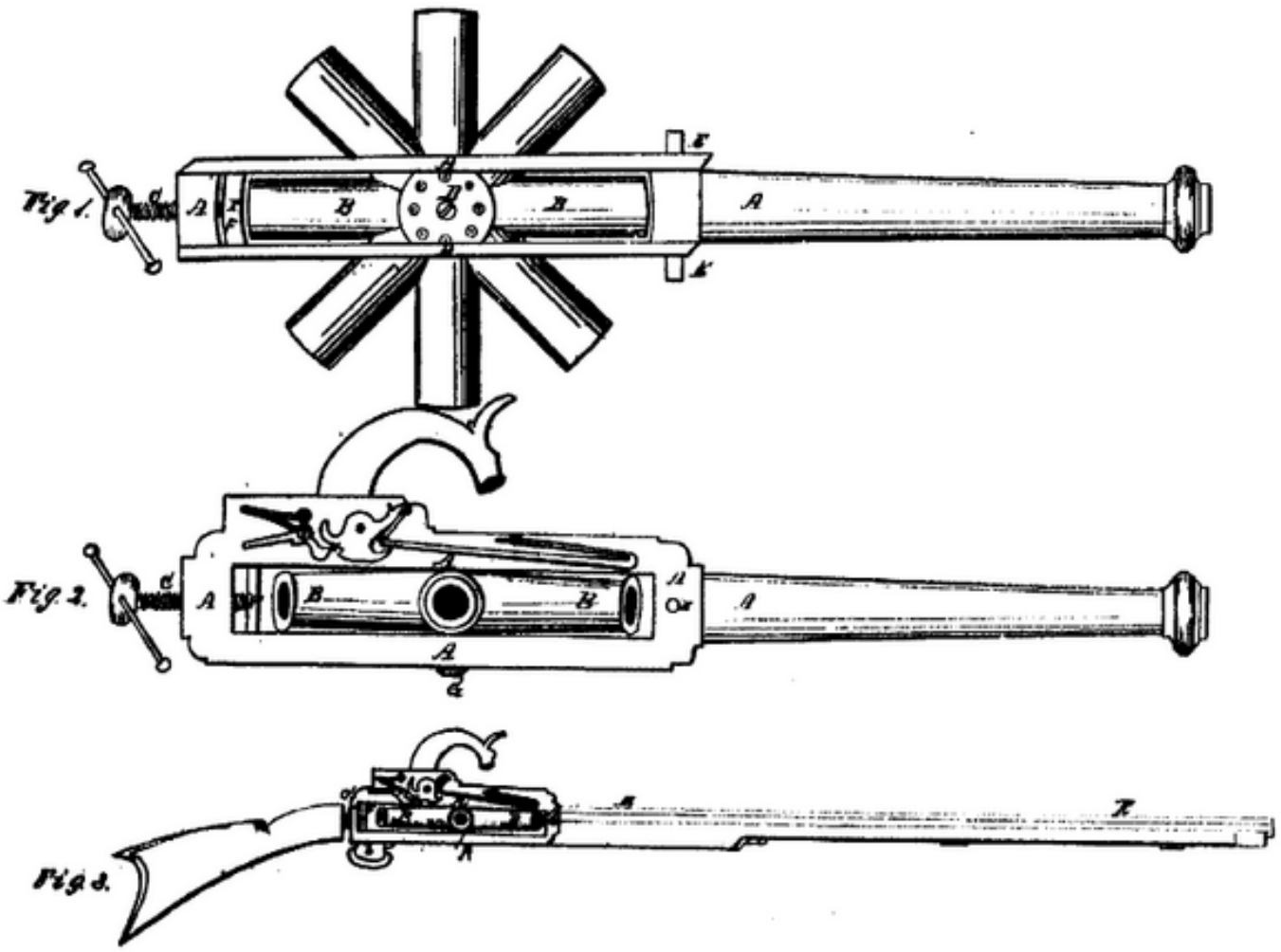
Fig. 1.
Fig. 2.
Fig. 3.

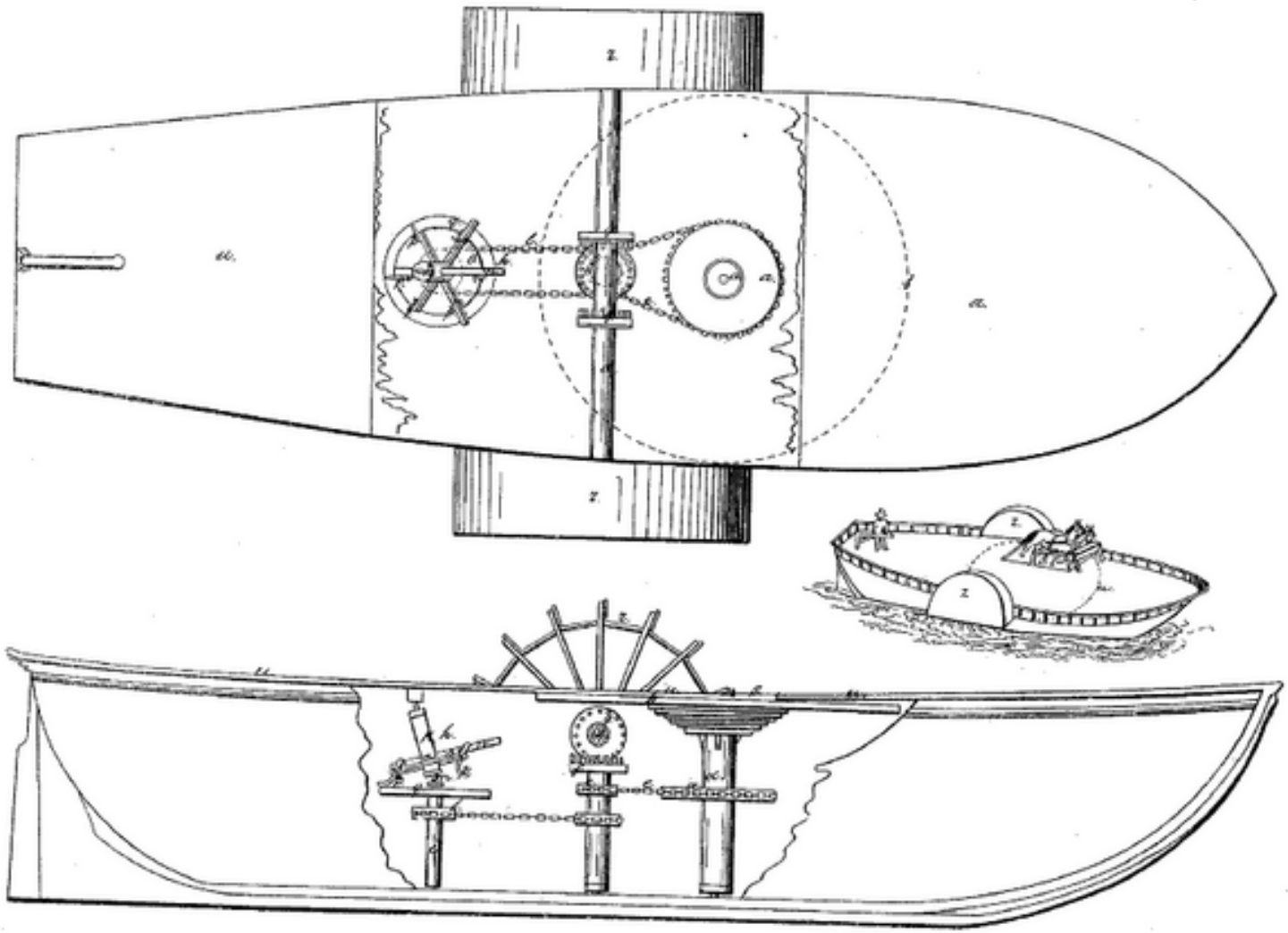

Lessons

- Everything is obvious in hindsight
- Requiring Congress to act for new subject matter may be ill advised

Importing the Laws of England

- England did not allow methods patents
- Methods were “principles”

Identifying Inventions

- No claims in many patents
- Improvement v. New inventions
- Principle of the machine

Lessons

- Methods jurisprudence is difficult now because courts made it difficult 200 years ago
- Justice Story shaped how we view methods today
- Views of methods changed from the founding until 1930's
- O'Reilly v. Morse: reliance on Neilson was a mistake
- Machines were not allowed in methods until the 1900's!

Business Methods

A		9	0		
		9	1		
		9	2		
		9	3		
		9	4		
		9	5		
		9	6		
		9	7		
		9	8		
		9	9		
	1	0	0		
	1	0	1		
	1	0	2		
	1	0	3		

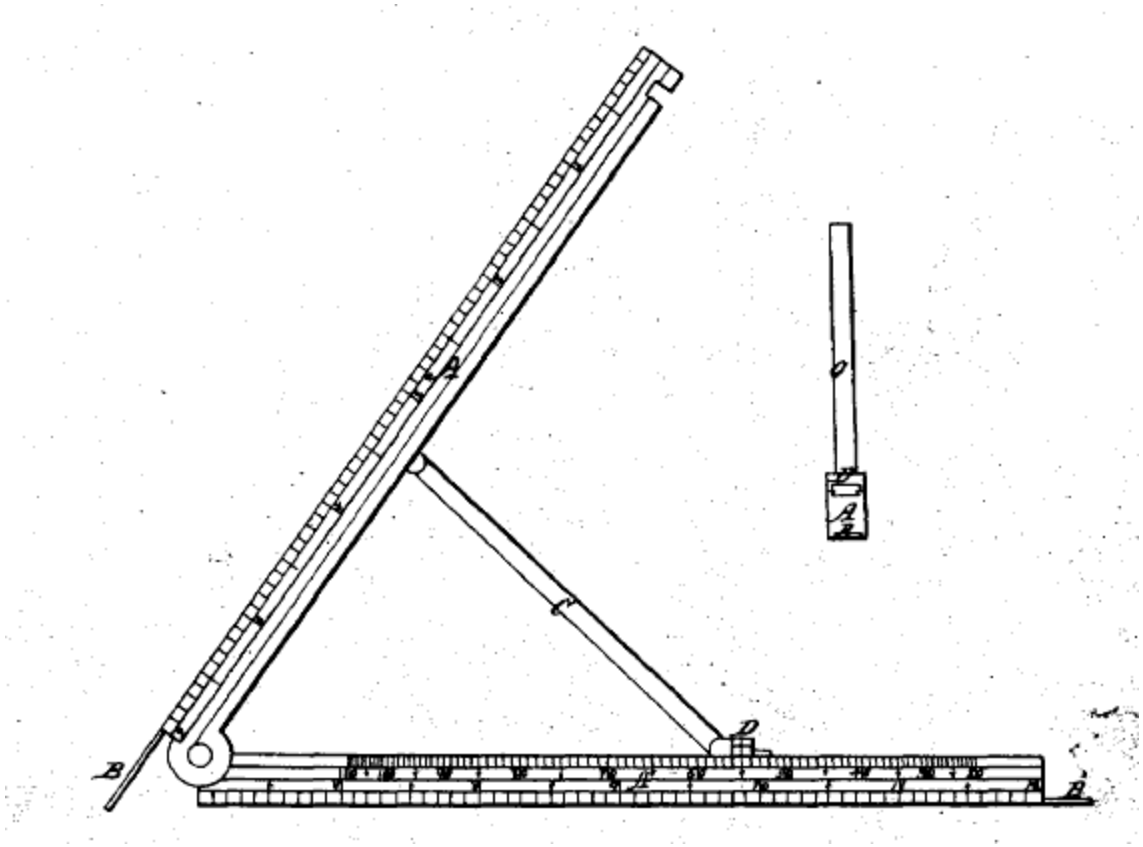
A
B
C
D
A
B
O
D
A
B

	Methods	Business Methods – Using Machine or Transforming	%	Business Methods - No Machine or Transformation	%
1790-1793	2	0	0.00%	0	0.00%
1794-1836	343	2	0.58%	25	7.29%
1836-1839	116	1	0.86%	8	6.90%
Total	461	3	0.65%	33	7.16%

Machines and Transformations

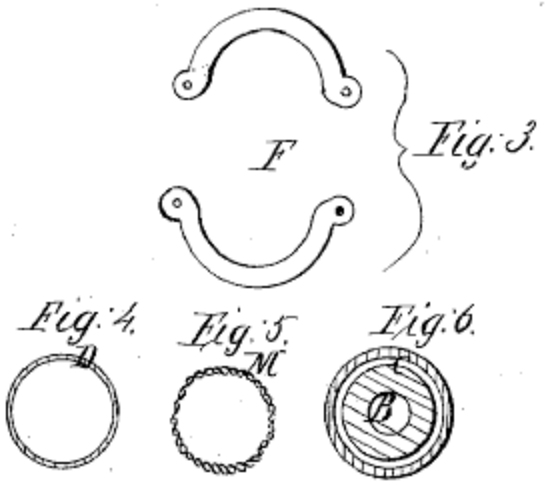

Fig. 3.

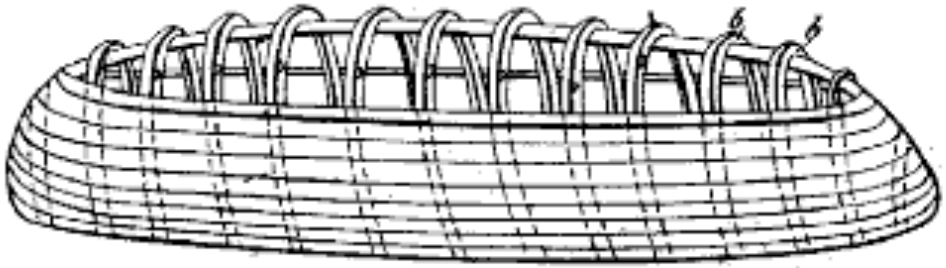

Fig 6.

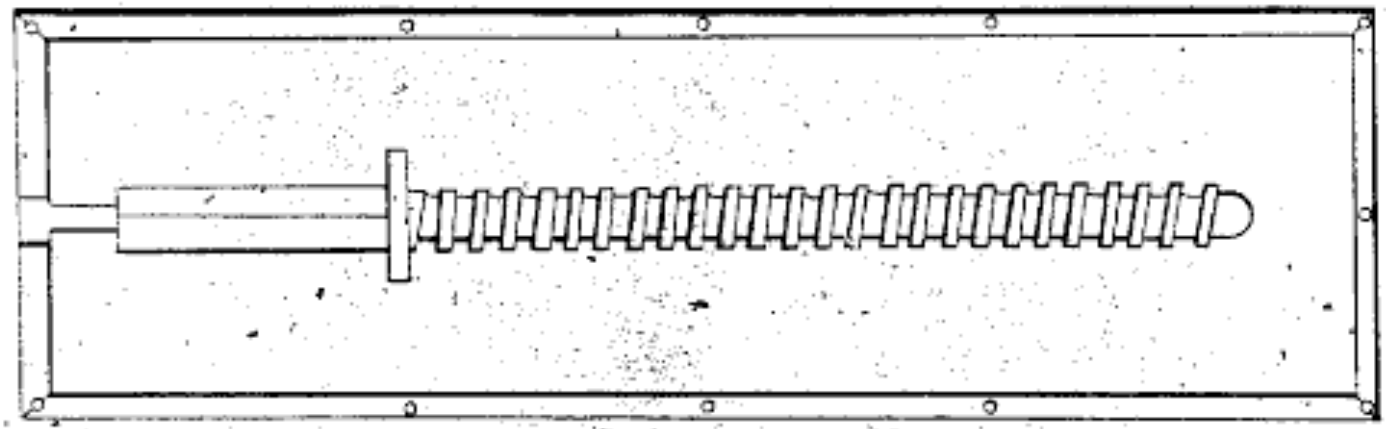

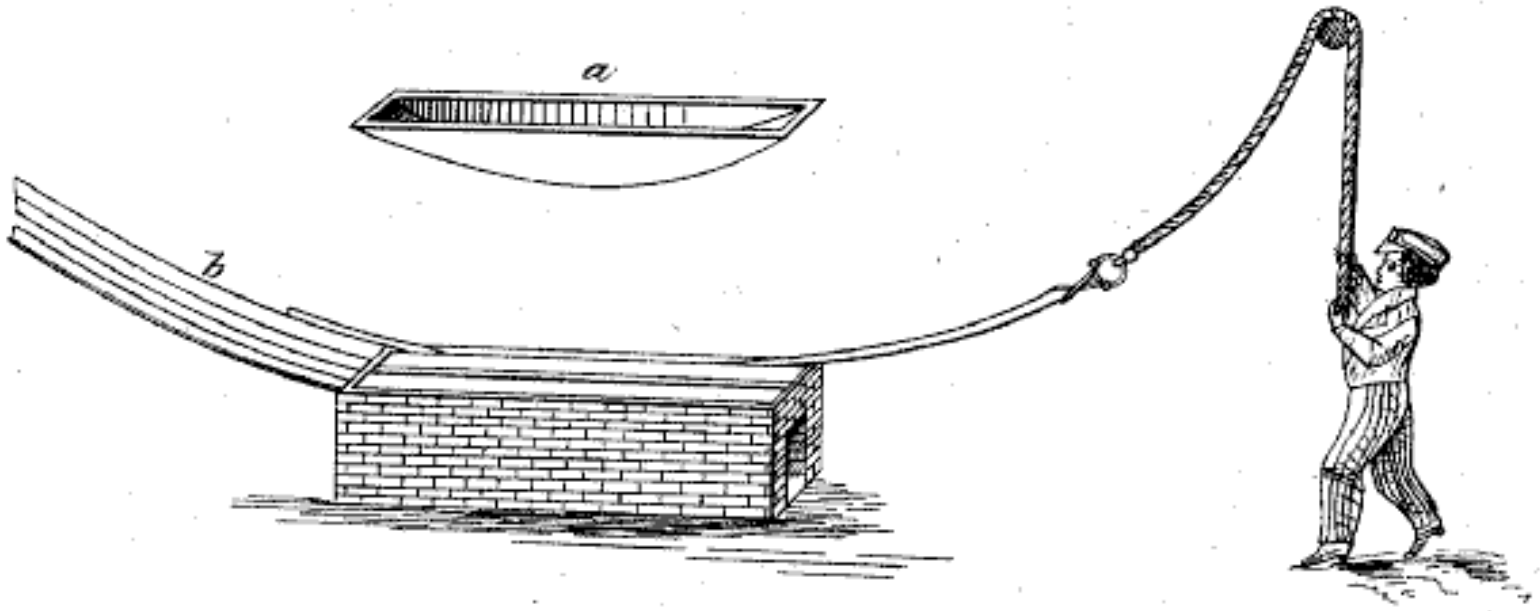
a
b

Fig: 2.

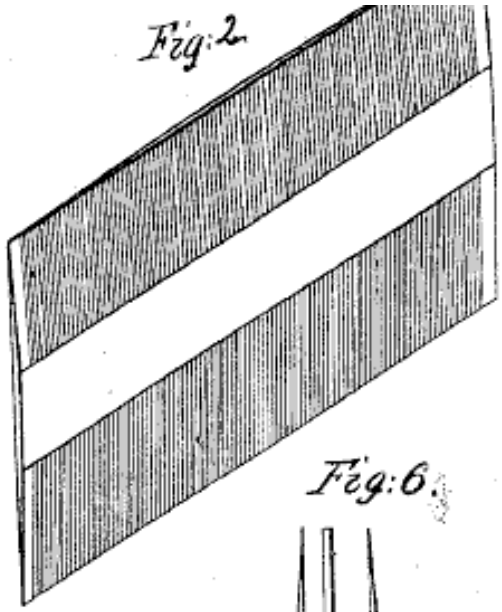

Fig: 6.

Totals

	Coded Patents	Methods	% Method	Use Machine? Transform?	% Machine or Transform
1790-1793	5	2	40.00%	2	100.00%
1794-1836	2477	343	13.85%	199	58.02%
1836-1839	1182	116	9.81%	73	62.93%
Total	3664	461	12.58%	274	59.44%

Lessons

- Machine or Transformation relatively accurate at identifying business methods
- Machine or Transformation over-inclusive of other methods
  - Many are admittedly manufacturing based
  - Few are abstract ideas