DESIGN OF OPTIMAL QUANTIZERS FOR DISTRIBUTED CODING OF NOISY SOURCES

David Rebollo-Monedero and Bernd Girod

Information Systems Lab., Electrical Eng. Dept.
Stanford University, Stanford, CA 94305

ABSTRACT

We investigate the design of optimal quantizers for individual encoding of several noisy observations of an unseen source, which is jointly decoded with the help of side information available at the decoder only. The joint statistics of the source data, the noisy observations and the side information are known, and exploited in the design. A variety of lossless coders for the quantization indices, including ideal Slepian-Wolf coders, are allowed. We present the optimality conditions such quantizers must satisfy, together with an extension of the Lloyd algorithm for a locally optimal design. Experimental results for Wyner-Ziv quantization of noisy Gaussian sources confirm the high-rate quantization theory established in our previous work.

1. INTRODUCTION

Consider a network of satellites obtaining noisy readings of some data of interest, which must be transmitted to a ground station. The ground station has access to side information, for instance archived data or readings from terrestrial sensors. At each satellite, neither the noisy observations of the other satellites nor the side information is available. Nevertheless, the statistical dependence among the unseen data, the noisy readings and the side information may be exploited in the design of each of the individual satellite encoders and the joint terrestrial decoder to optimize the rate-distortion performance. Clearly, if all the noisy readings and the side information were available at a single satellite, traditional joint denoising and encoding techniques could be used to reduce the transmission rate as much as possible, for a given distortion. However, since each of the noisy readings must be individually encoded without access to the side information, practical design methods for efficient distributed coders of noisy sources are needed.

The first attempts to design quantizers for Wyner-Ziv (WZ) coding, that is, lossy source coding of directly observed data with side information at the decoder, were based on high-dimensional nested lattices [1, 2] or heuristically designed scalar quantizers [3], often applied to Gaussian sources, with either fixed-rate coding or entropy coding of the quantization indices. A different approach was followed in [4], where the Lloyd algorithm was generalized for locally optimal, fixed-rate WZ quantization design. Later, [5] included rate-distortion optimized quantizers in which the rate measure is a function of the quantization index, for example, a codeword length. Lloyd quantization for ideal Slepian-Wolf coding without side information was considered in [6]. A more general extension of the Lloyd algorithm appeared in [7], which considered a variety of coding settings under a unified framework, including the important case of ideal Slepian-Wolf distributed coding of one or several sources with side information, that is, when the rate is the joint conditional entropy of the quantization indices given the side information. A theoretic characterization of WZ quantizers with Slepian-Wolf coding at high rates was presented in [8]. Recently, nested lattice quantizers and trellis-coded quantizers followed by Slepian-Wolf coders have been used to implement WZ coders (see, e. g., [9]).

The design of optimal quantizers of noisy observations of unseen sources *without* side information was studied in [10], and extended to the case of distributed quantization of many observations with joint reconstruction for fixed-rate coding in [11, 12]. The problem of optimal noisy WZ (NWZ) quantization design with side information at the decoder and ideal Slepian-Wolf coding has only been studied under the assumptions of high rates and particular statistical conditions [13].

The object of this paper is to study the design of quantizers for distributed coding of noisy observations, with side information at the decoder, optimized in terms of distortion and rate. We present a unified framework under which a variety of coding settings is allowed, including ideal Slepian-Wolf coding, along with an extension of the Lloyd algorithm for locally optimal design.

Sec. 2 contains the formulation of the problem studied, illustrated with applications. A theoretic analysis for optimal quantizer design is presented in Sec. 3. Experimental results for NWZ coding of jointly Gaussian data are shown in Sec. 4.

2. FORMULATION OF THE PROBLEM AND APPLICATIONS

Throughout the paper, the measurable space in which a random variable (r. v.) takes values will be called alphabet. We shall follow the convention of using uppercase letters for random variables, and lowercase letters for particular values they take on. Probability density functions (PDF) and probability mass functions (PMF) are denoted by p and subindexed by the corresponding r. v.

We study the design of optimal quantizers for distributed coders of noisy sources with side information. An example of such coder is depicted in Fig. 1. Let $n \in \mathbb{Z}^+$ represent the number of encoders. Let X, Y and $Z = (Z_i)_{i=1}^n$ be r. v. defined on a common probability space, statistically *dependent* in general, taking values in arbitrary, possibly different alphabets. For each i, Z_i represents an indirect observation of some unseen source data X of interest, available only at encoder i. For instance, Z_i might be an image corrupted by noise, an extracted feature such as a projection or a norm, or any type of correlated r. v., and X might also be of the form $(X_i)_{i=1}^n$, where X_i would play the role of the source data from which Z_i is originated. Some side information Y, for example previously decoded data, or an additional

This work was supported by NSF under Grant No. CCR-0310376.

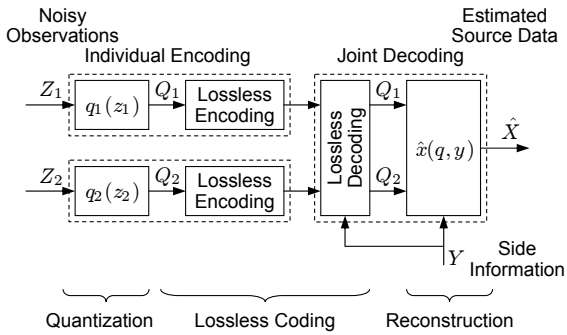

Fig. 1. Distributed coding of noisy sources with side information with $n = 2$ encoders.

noisy observation, is available at the decoder only. Each observation Z_i is quantized with a map $q_i(z_i)$ into a countable set, generating the quantization index Q_i, losslessly encoded and decoded. Define $Q = (Q_i)_{i=1}^n$. A particularly important case of lossless coding is ideal Slepian-Wolf coding, in which we assume that we can transmit Q at a rate equal to the joint conditional entropy $\mathrm{H}(Q|\,Y) = \mathrm{H}(Q_1, \ldots, Q_n|\,Y)$, and Q is recovered with zero probability of error. The vector of quantization indices Q and the side information Y are used jointly to estimate the unseen source data X. Let $\hat{X}$ represent the estimate, obtained with the reconstruction function $\hat{x}(q, y)$, possibly in an alphabet different from that of X.

The concept of rate measure was introduced in [7] to model particular types of lossless coding. We now extend this concept by means of a defining property. The term rate function will be used here, instead of rate measure, to avoid confusion with the concept of (probability) measure. Let $r(q, x, \hat{x}, y, z)$ be a measurable, non-negative, extended real-valued function, possibly defined in terms of probability distributions involving Q, X, Y and Z. Such function will be called rate function if its associated expected rate $\mathcal{R} = \mathrm{E}\, r(Q, X, \hat{X}, Y, Z)$ does *not* decrease when the probability distributions defining r are modified but the expectation is taken with respect to the original distributions. For example, consider $r(q, y) = -\log p_{Q|\,Y}(q|\,y)$. The rate function corresponding to any other PMF $p'_{Q|\,Y}$ would be $r'(q, y) = -\log p'_{Q|\,Y}(q, y)$. The modified associated rate would then be $\mathcal{R}' = \mathrm{E}\, r'(Q, Y)$, where r' is defined in terms of the new PMF but the expectation is taken with respect to the original one. Clearly, $\mathcal{R}' - \mathcal{R} = \mathrm{D}(p_{Q|\,Y} \| p'_{Q|\,Y}) \geqslant 0$, hence r is indeed a rate function. In fact, it was observed in [7] that for this example of rate function, the associated rate $\mathcal{R} = \mathrm{H}(Q|Y)$ is precisely that introduced by an ideal Slepian-Wolf coder. Consequently, $r(q, y) = -\log p_{Q|\,Y}(q|\,y)$ was used to model *both* this type of coder and a conditional coder with access to the side information at the encoder. It can be seen that all rate functions defined in [7] satisfy the above definition, thereby making the corresponding coding settings applicable to this framework.

A distortion function is defined as a measurable, non-negative, extended real-valued function $d(q, x, \hat{x}, y, z)$, completely determined as a given, fixed mapping, not depending on any probability distributions. The associated expected distortion is denoted by $\mathcal{D} = \mathrm{E}\, d(Q, X, \hat{X}, Y, Z)$. If the alphabets of X, Y, Z and $\hat{X}$ were equal to some common normed vector space, then an example of distortion function would be $d(x, \hat{x}, y, z) = \alpha\|x - \hat{x}\|^2 + \beta\|y - \hat{x}\|^2 + \gamma\|z - \hat{x}\|^2$, for any $\alpha, \beta, \gamma \in [0, \infty)$.

We define a cost function $c(q, x, \hat{x}, y, z)$ as a non-negative linear combination of rate and distortion functions. The associated expected cost is $\mathcal{C} = \mathrm{E}\, c(Q, X, \hat{X}, Y, Z)$. Note that under the previous definitions, a cost function is in fact a rate function. An example of cost function suitable for distributed source coding applications, the main focus of this work, is $c(q, x, \hat{x}, y) = d(x, \hat{x}) + \lambda\, r(q, y)$, where λ is a non-negative real number determining the rate-distortion tradeoff in the Lagrangian cost $\mathcal{C} = \mathcal{D} + \lambda\,\mathcal{R}$.

Given a suitable cost function $c(q, x, \hat{x}, y, z)$, we address the problem of finding quantizers $q_i(z_i)$ for each i, and a reconstruction function $\hat{x}(q, y)$, minimizing the associated expected cost $\mathcal{C}$. The choice of the cost function leads to a particular noisy distributed source coding system, including a model for lossless coding.

The problem of NWZ quantization, i. e., the case represented in Fig. 1 for $n = 1$, can be interpreted as a rate-constrained statistical inference problem with side information. Precisely, a statistic Q for X from Z with a rate constraint, say $H(Q|Y)$, is desired. For instance, X might be a parameter of a family of distributions for Z. If the Hamming distance (inequality indicator) between x and $\hat{x}$ were used as distortion function, then the expected distortion would be the probability of error, and the optimal reconstruction function would be a maximum a posteriori decoder given Q and Y, equivalent to a maximum-likelihood decoder (given Y) if X were (conditionally) uniformly distributed.

Even though the focus of this work is the application represented in Fig. 1, the generality of this formulation allows many others. For example, consider the coding problem represented in Fig. 2, proposed in [14]. A r. v. Z is quantized. The quanti-

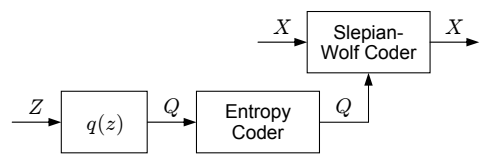

Fig. 2. Quantization of side information.

zation index Q is coded at rate $\mathcal{R}_1 = \mathrm{H}(Q)$, and used as side information for a Slepian-Wolf coder of a discrete random vector X. Hence, the additional rate required is $\mathcal{R}_2 = \mathrm{H}(X|Q)$. We wish to find the quantization function $q(z)$ minimizing $\mathcal{C} = \mathcal{R}_2 + \lambda\,\mathcal{R}_1$. It can be shown that $r_1(q) = -\log p_Q(q)$ and $r_2(x, q) = -\log p_{X|\,Q}(x|\,q)$ are well-defined rate functions, using an argument similar to that for $-\log p_{Q|\,Y}(q|\,y)$. Therefore, this problem is a particular case of our formulation. In fact, this is a NWZ or a statistical inference problem in which $\mathcal{R}_2$ plays the role of distortion, since minimizing $\mathrm{H}(X|Q)$ is equivalent to minimizing $\mathrm{I}(Z; X) - \mathrm{I}(Q; X)$, non-negative by the data processing inequality, zero if and only if Q is a sufficient statistic.

3. OPTIMAL QUANTIZER DESIGN

We now establish necessary conditions for the optimal quantization and reconstruction functions, analogous to the nearest neighbor and centroid condition found in conventional, non-distributed quantization. They will be expressed in terms of estimated cost functions, defined below.

The estimated cost function for sender i is defined as

$$\tilde{c}_i(q_i, z_i) = \mathrm{E}\left[[c(Q, X, \hat{x}(Q, Y), Y, Z)]_{Q_i = q_i} \,|\, z_i\right],$$

where $[\text{expression}]_{\text{substitution}}$ denotes substitution in an expression, that is, the expression is evaluated at q_i and conditioned on the

event $\{Z_i = z_i\}$. Note that the estimated cost function is completely determined by the joint distribution of X, Y and Z, the cost function $c(q, x, \hat{x}, y, z)$, the quantization functions of other senders $(q_{i'}(z_{i'}))_{i' \neq i}$, and the reconstruction function $\hat{x}(q, y)$. Using the fact that $Q_i = q_i(Z_i)$ and iterated expectation, it is easy to see that for *each* sender i, $\mathrm{E}\,\tilde{c}_i(Q_i, Z_i) = \mathcal{C}$. This key property leads to the necessary optimality condition for the quantization function at sender i:

$$q_i^*(z_i) = \arg\min_{q_i} \tilde{c}_i(q_i, z_i), \tag{1}$$

provided that a minimum exists.

Similarly to the sender cost functions, the estimated cost function at the receiver is defined as

$$\tilde{\tilde{c}}(q, \hat{x}, y) = \mathrm{E}[c(q, X, \hat{x}, y, Z) |\, q, y].$$

Observe that the expression is evaluated at $\hat{x}$ and conditioned on $\{Q = q,\, Y = y\}$, and it is completely determined by the joint distribution of X, Y and Z, the cost function $c(q, x, \hat{x}, y, z)$, and all quantization functions $(q_i(z_i))_i$. Arguing as in the case of the sender cost functions, it can be shown that $\mathrm{E}\,\tilde{\tilde{c}}(Q, \hat{X}, Y) = \mathcal{C}$. It follows from this key property that an optimal reconstruction function must satisfy

$$\hat{x}^*(q, y) = \arg\min_{\hat{x}} \tilde{\tilde{c}}(q, \hat{x}, y), \tag{2}$$

provided that a minimum exists, for each pair (q, y) satisfying $p_{Q|Y}(q|y) > 0$ ($\hat{x}(q, y)$ can be arbitrarily defined elsewhere).

The necessary optimality conditions (1) and (2), together with the rate update property defining rate functions, suggest an alternating optimization algorithm that extends the Lloyd algorithm to the quantizer design problem considered in this work:

1. Choose initial quantization functions $(q_i^{(1)}(z_i))_{i=1,\ldots,n}$. Set $k = 1$ and $\mathcal{C}^{(0)} = \infty$.
2. Update the cost function $c^{(k)}(q, x, \hat{x}, y, z)$, completely determined by probability distributions involving $Q^{(k)}$, X, Y and Z.
3. Find an optimal reconstruction function $\hat{x}^{(k)}(q, y)$, given $(q_i^{(k)}(z_i))_i$ and $c^{(k)}(q, x, \hat{x}, y, z)$.
4. Compute the expected cost $\mathcal{C}^{(k)}$ associated to $(q_i^{(k)}(z_i))_i$, $\hat{x}^{(k)}(q, y)$ and $c^{(k)}(q, x, \hat{x}, y, z)$. Depending on its value with respect to $\mathcal{C}^{(k-1)}$, continue or stop.
5. For each i, obtain the next optimal quantization function $(q_i^{(k+1)}(z_i))_i$, given the most current quantization functions with index $i' \neq i$, $\hat{x}^{(k)}(q, y)$ and $c^{(k)}(q, x, \hat{x}, y, z)$. Increase k and go back to 2.

It can be proved that the sequence of costs $\mathcal{C}^{(k)}$ in the above algorithm is non-increasing, and since it is non-negative, it converges. In addition, any quantizer satisfying the optimality conditions (1) and (2), without ambiguity in any of the minimizations involved, is a fixed point of the algorithm. Even though these properties do not imply per se that the cost converges to a local or global minimum, the experimental results in the next section show good convergence properties, especially when the algorithm is combined with genetic search for initialization.

Many variations on the algorithm are possible, such as constraining the reconstruction function, for instance imposing linearity in Y for each Q when the distortion is the mean-squared error of the estimate $\hat{X}$, or any of the variations mentioned in [7].

4. EXPERIMENTAL RESULTS

In this section, we illustrate the theoretic analysis with experimental results for a simple, intuitive case of NWZ coding (Fig. 1 with $n = 1$ encoder). Let $X_0 \sim \mathcal{N}(0, 1)$, and define $Y_0 = X_0 + N_Y$ and $Z_0 = X_0 + N_Z$, where $N_Y \sim \mathcal{N}(0, 1/\gamma_Y)$ and $N_Z \sim \mathcal{N}(0, 1/\gamma_Z)$, and X_0, N_Y and N_Z are independent. Consider a block of $k \in \mathbb{Z}^+$ independent, identically distributed drawings of (X_0, Y_0, Z_0), denoted by $((X_1, Y_1, Z_1), \ldots (X_k, Y_k, Z_k))$. The unseen source data is defined to be the k-dimensional r. v. $X = (X_1, \ldots, X_k)$, and similarly for the side information Y and the noisy observation Z. Clearly, X, Y and Z are jointly Gaussian. All experimental results were obtained setting $\gamma_Y = \gamma_Z = 10$.

We wish to design NWZ quantizers minimizing the Lagrangian cost $\mathcal{C} = \mathcal{D} + \lambda\,\mathcal{R}$, where the distortion is the mean-squared error $\mathcal{D} = \frac{1}{k}\,\mathrm{E}\,\|X - \hat{X}\|^2$, and the rate is that required by an ideal Slepian-Wolf coder, $\mathcal{R} = \frac{1}{k}\,\mathrm{H}(Q|\,Y)$, both normalized per sample. The high-rate approximation theory for NWZ quantization [13, Theorem 3] implies that

$$\mathcal{D}(\mathcal{R}) \simeq \frac{1}{1 + \gamma_Y + \gamma_Z} \left(1 + 2\pi\mathrm{e}\, M_k\, \frac{\gamma_Z}{1 + \gamma_Y}\, 2^{-2R}\right), \tag{3}$$

where M_k is the minimum normalized moment of inertia of the convex polytopes tessellating $\mathbb{R}^k$. The information-theoretic NWZ distortion-rate function follows immediately from [15, Theorem 5], and it is equal to the operational expression (3), replacing M_k by its limit as $k \to \infty$, i. e., $1/2\pi\mathrm{e}$.

For dimensions $k = 1,\ 2$ and several values of λ, NWZ quantizers and reconstruction functions were designed using the extension of the Lloyd algorithm presented in this work. A simple genetic search method was combined with the Lloyd algorithm to select initial quantizers based on their cost after convergence. The corresponding distortion-rate points are shown in Fig. 3, along with the NWZ distortion-rate function, the high-rate approximation, and the distortion bounds $\mathcal{D}_0 = \sigma^2_{X|\,Y} = 1/(1 + \gamma_Y)$ and $\mathcal{D}_\infty = \sigma^2_{X|\,YZ} = 1/(1 + \gamma_Y + \gamma_Z)$. The results obtained con-

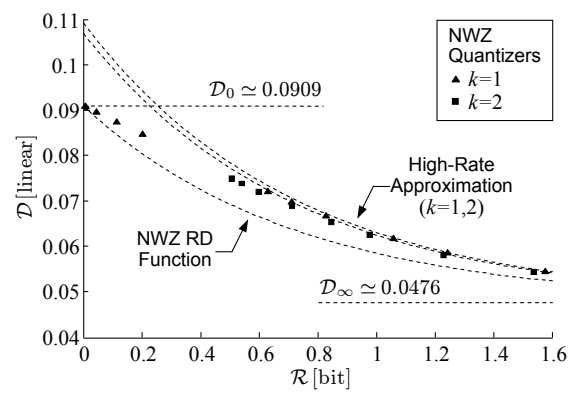

Fig. 3. Distortion-rate performance of optimized NWZ quantizers for dimensions $k = 1,\ 2$.

firm the theory developed in [13, 15] (see also [8, 16]) and the usefulness of the algorithm presented, for the statistics of the example. Two 2-dimensional NWZ quantizers for $\mathcal{R} \simeq 0.50$ and $\mathcal{R} \simeq 0.97$ bit are represented in Fig. 4. According to the results in Fig. 3, the quantizer on the left may be considered a low-rate quantizer, and the one on the right, a high-rate quantizer. Note the index repetition in the quantizer on the left. Consistently with the high-rate NWZ quantization theory, the quantizer on the right is

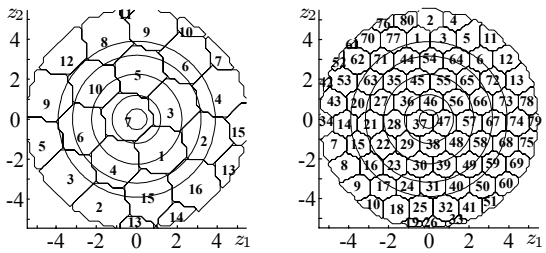

Fig. 4. Optimized 2D NWZ quantizers for $\mathcal{R} = \mathrm{H}(Q|\,Y)$. Left: $\lambda = 0.031$, $\mathcal{R} \simeq 0.50\,\mathrm{bit}$, $\mathcal{D} \simeq 0.075$. Right: $\lambda = 0.02$, $\mathcal{R} \simeq 0.97\,\mathrm{bit}$, $\mathcal{D} \simeq 0.063$. Circles enclose sets of probability 0.1, 0.5, 0.9, 0.99 and 0.999.

a hexagonal lattice, and no index is reused. To obtain the latter quantizer, the algorithm was applied to a fine discretization of the joint PDF of X, Y and Z, with approximately $7.0\,10^6$ samples contained in a 6-dimensional ellipsoid of probability $1 - 10^{-4}$, which gave 5557 different points for Z. Due to this discretization, the edges of the quantization regions appear somewhat jagged. For $k = 1$ and high rates, all quantizers obtained experimentally where uniform without index repetition.

We now turn to the case of NWZ quantizers with ideal, non-distributed entropy coding, i. e., $\mathcal{R} = \mathrm{H}(Q)$. Currently, no theoretic characterization of such NWZ quantizers exist, but it was observed in [7] that index repetition may be convenient in terms of rate-distortion performance, for this case, and also for the fixed-rate case, when the source data is directly observed ($Z = X$). Intuitively, disconnected regions may be mapped into a common quantization index to reduce the entropy (or the number of quantization indices), with little impact on the distortion so long as the side information helps determine in which region the quantized value actually was. A scalar NWZ quantizer obtained with our extension of the Lloyd algorithm is depicted in Fig. 5. Observe

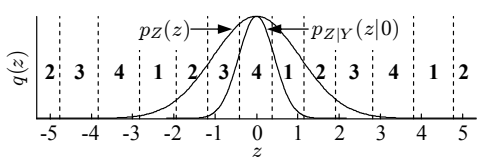

Fig. 5. Optimized scalar NWZ quantizer for $\mathcal{R} = \mathrm{H}(Q)$. $\lambda = 0.011$, $\mathcal{R} \simeq 2.0\,\mathrm{bit}$, $\mathcal{D} \simeq 0.058$.

that the quantizer is *almost* uniform and there *is* index repetition with respect to the PDF p_Z of Z ($\sigma_Z^2 = 1 + 1/\gamma_Z = 1.1$). However, the conditional PDF $p_{Z|\,Y}$ of Z given Y is narrow enough for the index repetition to have negligible impact on the distortion ($\sigma_{Z|\,Y}^2 = 1/(1+\gamma_Y) + 1/\gamma_Z \simeq 0.19$).

5. CONCLUSIONS

We have established necessary optimality conditions for distributed quantization of noisy sources with a variety of rate constraints, and extended the Lloyd algorithm for its design. The generality of our formulation, in which the concept of cost function plays a key role, includes many other applications such as statistical inference and quantization of side information. Experimental results confirm the high-rate approximation theory for NWZ quantization. In addition, they suggest that the convergence properties of the extended Lloyd algorithm are similar to those of the classical one, and can benefit from a genetic search algorithm for initialization.

6. REFERENCES

[1] R. Zamir and S. Shamai, "Nested linear/lattice codes for Wyner-Ziv encoding," in *Proc. IEEE Inform. Theory Workshop (ITW)*, Killarney, Ireland, June 1998, pp. 92–93.

[2] S. D. Servetto, "Lattice quantization with side information," in *Proc. IEEE Data Compression Conf. (DCC)*, Snowbird, UT, Mar. 2000, pp. 510–519.

[3] S. Sandeep Pradhan and K. Ramchandran, "Distributed source coding using syndromes (DISCUS): Design and construction," in *Proc. IEEE Data Compression Conf. (DCC)*, Snowbird, UT, Mar. 1999, pp. 158–167.

[4] M. Fleming and M. Effros, "Network vector quantization," in *Proc. IEEE Data Compression Conf. (DCC)*, Snowbird, UT, Mar. 2001, pp. 13–22.

[5] M. Fleming, Q. Zhao, and M. Effros, "Network vector quantization," *IEEE Trans. Inform. Theory*, vol. 50, no. 8, pp. 1584–1604, Aug. 2004.

[6] J. Cardinal and G. Van Asche, "Joint entropy-constrained multiterminal quantization," in *Proc. IEEE Int. Symp. Inform. Theory (ISIT)*, Lausanne, Switzerland, June 2002, p. 63.

[7] D. Rebollo-Monedero, R. Zhang, and B. Girod, "Design of optimal quantizers for distributed source coding," in *Proc. IEEE Data Compression Conf. (DCC)*, Snowbird, UT, Mar. 2003, pp. 13–22.

[8] D. Rebollo-Monedero, A. Aaron, and B. Girod, "Transforms for high-rate distributed source coding," in *Proc. Asilomar Conf. Signals, Syst., Comput.*, Pacific Grove, CA, Nov. 2003, invited paper.

[9] Z. Xiong, A. Liveris, S. Cheng, and Z. Liu, "Nested quantization and Slepian-Wolf coding: A Wyner-Ziv coding paradigm for i.i.d. sources," in *Proc. IEEE Workshop Stat. Signal Processing (SSP)*, St. Louis, MO, Sept. 2003.

[10] J. K. Wolf and J. Ziv, "Transmission of noisy information to a noisy receiver with minimum distortion," *IEEE Trans. Inform. Theory*, vol. IT-16, no. 4, pp. 406–411, July 1970.

[11] J. A. Gubner, "Distributed estimation and quantization," *IEEE Trans. Inform. Theory*, vol. 39, no. 4, pp. 1456–1459, July 1993.

[12] W. M. Lam and A. R. Reibman, "Design of quantizers for decentralized estimation systems," *IEEE Trans. Inform. Theory*, vol. 41, no. 11, pp. 1602–1605, Nov. 1993.

[13] D. Rebollo-Monedero, S. Rane, and B. Girod, "Wyner-Ziv quantization and transform coding of noisy sources at high rates," in *Proc. Asilomar Conf. Signals, Syst., Comput.*, Pacific Grove, CA, Nov. 2004.

[14] J. Cardinal, "Compression of side information," in *Proc. IEEE Int. Conf. Multimedia, Expo (ICME)*, Baltimore, MD, July 2003, vol. 2, pp. 569–572.

[15] D. Rebollo-Monedero and B. Girod, "A generalization of the rate-distortion function for Wyner-Ziv coding of noisy sources in the quadratic-Gaussian case," in *Proc. IEEE Data Compression Conf. (DCC)*, Snowbird, UT, Mar. 2005.

[16] Z. Liu, S. Cheng, A. D. Liveris, and Z. Xiong, "Slepian-wolf coded nested quantization (SWC-NQ) for Wyner-Ziv coding: Performance analysis and code design," in *Proc. IEEE Data Compression Conf. (DCC)*, Snowbird, UT, Mar. 2004, pp. 322–331.